BOX 06A

BOOK
19 1 OF 2

#211

JOB TRACKING PRODUCTION ORDER

Company Name: _____ **DATE:** _____

Order #: _____

		INITIALS:
☐	Hold Drawings & Update Files	_____
☐	Print Order	_____
☐	Return Superceded Originals	_____
☐	Return Originals	_____
☐	Packed & Shipped	_____

Date Sent: _____

Time Sent: _____ a.m. ☐ p.m. ☐

COMMENTS:

_____

_____

_____

Just clipped pages
19-AB-974.1–.3

- Type up cover page
- cover page gets copied on cover stock

WTC DRAWING
BOOK 19
AB-1–K-1055

SKILLING, HELLE, CHRISTIANSEN, ROBERTSON — Structural & Civil Engineers

PROJECT: THE WORLD TRADE CENTER | TITLE: DRAWING BOOK 19 - REVISIONS AFTER FABRICATION | DATE: 5/18/73

SIONS

DWG. NO.	TITLE	DATE
19-AB- 0.1	INDEX & DATE PAGE	5/18/73
19-AB- 0.2	INDEX & DATE PAGE	5/18/73
19-AB- 0.3	INDEX & DATE PAGE	5/18/73
19- AB- 0.4	INDEX & DATE PAGE	5/18/73
19- AB- 0.5	INDEX & DATE PAGE	5/18/73
19-AB- 1	GEN NOTES	3/12/69
19-A -900	DETAIL 900	8/15/68
19-A -901	DETAIL 901	8/15/68
19-A -903	DETAIL 903	8/15/68
~~19-A -904~~	~~DETAIL 904~~	~~8/15/68~~
19-A -905	DETAIL 905	8/15/68
19-A -906	DETAIL 906	8/15/68
19-A -907	DETAIL 907	8/15/68
19-A -908	DETAIL 908	8/15/68
19-A -909	DETAIL 909	8/15/68
19-A -910	DETAIL 910	8/15/68
19-A -911	DETAIL 911	8/15/68
19-AB-912	DETAIL 912	10/ 7/68
19-B -913	DETAIL 913	10/ 9/68
19-A -914	DETAIL 914	11/20/68
19-AB-915	DETAIL 915	11/29/68
19-B -916	DETAIL 916	1/ 3/69
19-A -918	DETAIL 918	1/15/69
19-AB-919	DETAIL 919	1/17/69
19-AB-920	DETAIL 920	1/17/69
19-A -921	DETAIL 921	1/27/69
19-A -922	DETAIL 922	3/19/69
19-AB-923	DETAIL 923	3/19/69
19-AB-923.1	DETAIL 923	3/19/69
19-AB-925	DETAIL 925	3/13/69
19-A -926	DETAIL 926	3/14/69
19-AB-927	DETAIL 927	3/21/69
19- B-928	DETAIL 928	5/ 9/69
19-A -929	FL 2 TOWER A	6/13/69
19-K -929.1	REV.TROLLEY BM.SUPPT.	
19-K -929.2	REV.TROLLEY BM.SUPPT.	
19-AB-930	DETAIL E 53	6/10/69
19-AB-931	DETAIL 931	6/10/69
19-J -932	DETAIL H	6/20/69
19-AB-951.1	HOIST SUPPTS	12/ 7/70
19-AB-951.2	HOIST SUPPTS	12/ 7/70
19-AB-951.3	HOIST SUPPTS	12/ 7/70
19-AB-951.4	HOIST SUPPTS	12/ 7/70
19-AB-952	HOIST SUPPTS	12/ 7/70
19-AB-953	HOIST SUPPTS	12/ 7/70
19-AB-954	HOIST SUPPTS	12/ 7/70
19-AB-955	HOIST SUPPTS	8/11/69
19-AB-956	HOIST SUPPTS	8/11/69
19-AB-957	BEAM SEAT 7&9	8/20/69
19-AB-958	DAMPER CONN	8/20/69
19-AB-959	EXT. WALL	9/ 2/69
19-A -961.1	STR/RPR.FL25.	12/ 1/69
19-A -961.2	STUD RP.FL25.	12/ 1/69
19-A -961.3	STUD RP.FL25.	12/ 1/69
19- B-962	MODI DK SHF	7/27/70
19- B-965	MODI TO BEAM	4/28/70
19- B-966	FL. TRUSS DET	5/11/70
19- B-967	FL107 BM REINF	6/17/70
19- B-968	BM SEAT REP.	8/ 3/70
19-A -969.1	LOUV SUPPTS	8/ 7/70
19-A -969.2	LOUV SUPPTS	8/ 7/70
19-A -970.1	REP OPNG FL7	8/ 7/70
19-A -970.2	REP OPNG FL7	8/ 7/70
19-A -971	REP SEP BEAM	9/25/70
19-A -972	FL.77 CONC.	8/25/70
19- B-973.1	HDR DUCT FL44	9/28/70
19- B-973.2	HDR DUCT FL44	9/28/70
19-AB-974.1	CORE COL. REINF. FL. 98-106	12/ 1/71
19-AB-974.2	CORE COL. REINF. FL. 98-106	12/ 1/71
19-AB-974.3	CORE COL. REINF. FL. 98-106	12/ 1/71
19- B-975	BM REP.FL59&92	10/28/70
19-A -980	TEMP TRUSS	1/ 7/71
19-A -981.1	FL CONN DET	1/ 7/71
19-A -981.2	FL CONN DET	1/ 7/71
19-A -981.3	FL CONN DET	1/ 7/71
19-A -982.1	FL 106 BM CPL	1/ 7/71
19-A -982.2	FL 106 BM CPL	1/ 7/71
19-A -983.1	FL.TRUSS C32T1	10/ 6/71
19-A -983.1A	FL.TRUSS C32T1	10/ 6/71
19-A -983.1B	FL.TRUSS C32T1	10/ 6/71
19-A -983.2	FL.TRUSS C32T1	10/ 6/71
19-A -983.2A	FL.TRUSS C32T1	10/ 6/71
19-A -983.3	FL.TRUSS C32T8	10/ 6/71
19-A -983.3A	FL.TRUSS C32T8	10/ 6/71
19-A -983.4	FL.TRUSS C32T7	10/ 6/71
19-A -983.5	FL.TRUSS C32T2	10/ 6/71
19-A -983.6	FL.TRUSS C32T3	10/ 6/71
19-A -983.7	FL.TRUSS C3/T9	10/ 6/71
19-A -983.8	FL.TRUSS C32T10	10/ 6/71
19-A -983.9	FL.TRUSS C32T11	10/ 6/71
19-A -983.10	FL.TRUSS C32T4	10/ 6/71
19-A -983.11	FL.TRUSS C32T13&T6	10/ 6/71
19-A -983.12	FL.TRUSS C32T5&T12	10/ 6/71
19-A -984.1	FL.TRUSS FL.106	10/ 6/71
19-A -984.2	FL.TRUSS FL.106	10/ 6/71
19-A -984.3	FL.TRUSS FL.106	10/ 6/71
19-A -984.4	FL.TRUSS FL.106	10/ 6/71
19-A -984.5	FL.TRUSS FL.106	10/ 6/71
19-A -984.6	FL.TRUSS FL.106	10/ 6/71
19-A -985.1	TRUSS DET-FL106	10/ 6/71
19-A -985.2	TRUSS DET-FL106	10/ 6/71
19-A -985.3	TRUSS DET-FL106	10/ 6/71
19-A -985.4	TRUSS DET-FL106	10/ 6/71
19-A -985.5	TRUSS DET-FL106	10/ 6/71
19-A -985.6	TRUSS DET-FL106	10/ 6/71
19-A -985.7	TRUSS DET-FL106	10/ 6/71

19-A-981.0 11/30/79
19-A-981-X 10/15/79
19-A-982.3 10/15/79

19-A-982.4A 5/9/79
19-A-984.7 5/9/79
19-A-984.8 1/30/80

LICENSED PROFESSIONAL ENGINEER — LESLIE E. ROBERTSON — No 34360 — CITY OF THE STATE OF NEW YORK

SKILLING, HELLE, CHRISTIANSEN, ROBERTSON — Structural & Civil Engineers

PROJECT: THE WORLD TRADE CENTER | TITLE: DRAWING BOOK 19 - REVISIONS AFTER FABRICATION | DATE: 5/18/73

SIONS

DWG. NO.	TITLE	DATE
19-A -985.8	TRUSS DET-FL106	10/ 6/71
19-A -985.9	TRUSS DET-FL106	10/ 6/71
19-A -985.10	TRUSS DETAILS-FL.106	VOID
19-A -986	FL.106 STUD DETAILS	1/ 7/71
19-A -987.1	FL.106 CONN.DETAILS	10/ 6/71
19-A -987.2	FL.106 CONN.DETAILS	10/ 6/71
19-A -987.3	FL.106 CONN.DETAILS	10/ 6/71
19-A -987.4	FL.106 CONN.DETAILS	VOID
19-A -987.5	FL.106 CONN.DETAILS	VOID
19-A -987.6	FL.106 CONN.DETAILS	10/ 6/71
19-A -988.1	TRUSS DETAILS FL.106	VOID
19-A -988.2	TRUSS DETAILS FL.106	VOID
19-A -989.1	TRUSS DETAILS FL.106	VOID
19-A -989.2	TRUSS DETAILS FL.106	VOID
19-A -989.3	TRUSS DETAILS FL.106	VOID
19-A -989.4	TRUSS DETAILS-FL.106	VOID
19-A -990.1	TRUSS DETAILS FL.106	VOID
19-A -990.2	TRUSS DETAILS FL.106	VOID
19-A -990.3	TRUSS DETAILS FL.106	VOID
19-A -991.1	LOUVER SUPPORT FL108	2/ 5/71
19-A -991.2	LOUVER SUPPORT FL108	2/ 5/71
19- B-992	BM.ST.REP.TWR.B FL107	3/15/71
19- B-993	BM.ST.REP.TWR.B FL107	3/15/71
19- B-994	COL.SPLICE REP FL107	3/15/71
19-A -995	FLD.REP.SPANDL.EL.310	3/19/71
19-AB-996.1	TRUSS BOT.CHD.BM.CONN	4/15/71
19-AB-996.2	TRUSS BOT.CHD.BM.CONN	4/15/71
19-AB-998	NEW PLK.WALL SUPPT-IL	6/ 8/71
19-AB-999	FLD.INSTL.BMS WW LIFT	7/ 2/71
19-A -1001	245 A 12-9	6/ 5/69
19-AB-1002	245 A 12-9	6/ 5/69
19-AB-1003	SEAT DETAIL	6/ 5/69
19-AB-1004.1	COL. SPLICE	6/20/69
19-AB-1004.2	COL. SPLICE	6/20/69
19-AB-1005	SPANDREL SPL.	6/20/69
19-A -1010	PUMP PLATFORM	8/ 7/69
19-AB-1011	PUMP PLATFORM	8/29/69
19-B -1012	PUMP PLATFORM	8/ 7/69
19-AB-1013	PUMP PLATFORM	8/29/69
19-J -1020	PATH TUBE	8/18/69
19-K -1025	STR/BM. TO G.	10/17/69
19-K -1026	MODIF.230.00.	11/11/69
19-J -1027	G. J2A & J2F.	11/24/69
19-A -1030	DETAIL KITC.	VOID
19-K -1031	SUPPORT TELE.	3/16/70
19-K -1035	OPNG THRU BM.	6/23/70
19-K -1036	TEMP SUPPT	8/25/70
19-J -1037	DETNEW HANG .	10/ 1/70
19- K-1038	REM BMS OVER RAMP ELEV.310	12/ 4/70
19- K-1039.1	STEEL BEAM REPAIR ELEV.310	1/15/71
19- K-1039.2	STEEL BEAM REPAIR ELEV.310	1/15/71
19-K-1040.1	REP.TEMP.GDR. EXP JT	1/14/71
19-K-1040.2	REP.TEMP.GDR. EXP JT	1/14/71
19-JK-1044	TEMP.OPNG. 310 LEVEL	VOID
19-JK-1045	EMERGENCY GENERATOR	7/26/71
19-JK-1046	REV.COL.SUPPORT	9/16/71
19- K-1047.1	PLAZA LEVEL SECTIONS	10/ 7/71
19- K-1047.2	PLAZA LEVEL SECTIONS	10/ 7/71
19-J-1048.1	KEY PLAN FOR LOCATION OF LEGS	10/ 1/71
19-J-1048.2	KEY PLAN FOR LOCATION OF LEGS	10/ 1/71
19-J-1048.3	NOTES &DETAILS-CALDER STABILE	10/ 1/71
19- K-1049	SECTIONS ELEV. 332 STAIR 4	10/29/71
19- K-1050	SECTIONS ELEV.332 STAIR 4	10/29/71
19-JK-1051.1	EMRGY.GENRTR.PLTFORM EL246-6 J5&K1	12/ 2/71
19-JK-1051.2	EMRGY.GENRTR.PLTFORM EL246-6 J5&K1	12/ 2/71
19- K-1052.1	DETAIL FOR SHEARHEAD REPAIR	3/10/72
19- K-1052.2	BEAM REPAIR AT ELEV. 310	12/23/71
19- K-1053.1	REINFORCING PLATES OF EXIST.COLS	12/23/71
19- K-1053.2	REINFORCING PLATES OF EXIST.COLS	12/23/71
19- K-1053.3	REINFORCING PLATES OF EXIST.COLS	12/23/71
19- K-1054	BASE PLATE REPAIR	2/15/72
19- K-1055.1	DETAIL FOR SHEARHEAD COL.K43/7&K43/8	6/30/72
19- K-1055.1	COL.K35/5	5/ 4/73
19- K-1055.1	COL.K31/5	8/31/72
19- K-1055.1	COL.K35/4	5/ 4/73
19- K-1055.1	COL.K35/8	8/31/72
19- K-1055.1	COL.K35/9	8/31/72
19- K-1055.1	COL.K37/9&K41/9	8/31/72
19- K-1055.1	COL.K31/6	6/30/72
19- K-1055.1	COL.K35/6&K35/7	5/ 4/73
19- K-1055.1	COL.K35/2	5/ 4/73
19- K-1055.1	COL.K41/8	6/30/72
19- K-1055.1	COL.K35/10	8/31/72
19- K-1055.1	COL.K37/2	5/ 4/73
19- K-1055X		VOID

19-A-988.3 5/9/79

LICENSED PROFESSIONAL ENGINEER — LESLIE E. ROBERTSON — No. 34360 — STATE OF NEW YORK

19-AB-0.2

SKILLING, HELLE, CHRISTIANSEN, ROBERTSON — Structural & Civil Engineers

PROJECT	TITLE	DATE
THE WORLD TRADE CENTER	DRAWING BOOK 19 - REVISIONS AFTER FABRICATION	5/18/73

REVISIONS

Printed 3-4-74

DWG. NO.	TITLE	DATE
19- K-1055.2	DETAIL FOR SHEARHEAD REPAIR	1/15/72
19- K-1055.2	COL.K31/3	6/30/72
19- K-1055.2	COL.K41/8	6/30/72
19- K-1055.2	COL.K31/6	6/30/72
19- K-1055.2	COL.K43/7&K43/8	6/30/72
19- K-1055.3	COL.K43/7&K43/8	10/ 5/73
19- K-1056.1	BEAM CONNECTIONS MEZZ.EL.320	10/10/72
19- K-1056.2	BEAM CONNECTIONS MEZZ.EL.320	10/10/72
~~19- K-1056~~	~~BEAM CONNECTIONS MEZZ EL.320~~	~~1/15/72~~
19- K-1057	HANGER DETAILS	1/15/72
19- K-1058	REPAIR DETAIL-EL.310	1/15/72
19- K-1059	NEW COLUMN BOSOM & BEARING PLATES	1/15/72
19- K-1060	BEAM COVER PLATE-EL. 332	1/15/72
19-J -1061	NEW OPENING-EL.279'3*	3/ 3/72
19-K-1062.1	EL332-ZONE K3-ELEVTRS K3,K4&K5	3/10/72
19-K-1062.2	EL332-ZONE K3-ELEVTRS K3,K4&K5	3/10/72
19-K-1062.3	EL332-ZONE K3-ELEVTRS K3,K4&K5	2/11/72
19- K-1063	TEMP.PLANKED AREA-EL. 332-ZONE K1	2/16/72
19-J-1064.1	PATH-NEW STAIR	2/25/72
19-J-1064.2	PATH-NEW STAIR	2/25/72
19-J -1065	PATH-NEW STAIR	2/25/72
19-J -1066	DET.OF WALL REPAIR IN FAN ROOM	3/ 7/72
19- K-1067	PARK.ELEVATORS ZONE K-3-EL.310	3/10/72
19-K-1068.1	NEW SLAB OPNGS ZONE K1-ELEV.274	6/23/72
19-K-1068.2	NEW SLAB OPNGS ZONE K1-ELEV.274	6/23/72
19- K-1069	OPNGS IN BMS.STORM SEWER PIPES	5/12/72
19- K-1070	NEW OPNGS.EL.294	11/ 7/72
19- K-1073	NEW OPNGS.WALLS ZONE K1,EL242	10/10/72
19- K-1074	WALL OPENING-EL284 ZONE K6	1/ 8/73
19- K-1075.1	RELOCATED PIT ZONE J6 290/294	4/12/73
19- K-1075.2	RELOCATED PIT ZONE J6 290/294	4/12/73
19- K-1076.1	EL.274,ZONE J4,RAMP J REINF.	9/ 7/73
19- K-1076.2	EL.274,ZONE J4,RAMP J REINF.	5/ 8/73
19- K-1076.3	EL.274,ZONE J4,RAMP J REINF.	5/ 8/73
19- K-1076.4	ZONE J2,RAMPJ,REINF	9/ 7/73
19- K-1076.5	EL.274,ZONE J4,RAMP J REINF.	5/24/73
19- K-1076.6	EL.274,ZONE J4,RAMP J REINF.	5/ 8/73
19-J -1077	NEW OPNG.IN SLOPING SLAB	5/15/73
19- K-1078	SHIMS AT STAIR PL2-SO TWR A-310/332	7/10/73
19- K-1079	HOLES IN BEAM-EL.320 MEZZ.ZO.K1	8/16/73
19- K-1080	REPAIR AT SLURRY WALL AT SEPB COL/BA	1/10/74
19- K-1081	REPAIR AT BMENDS-332 ZONE K-3	1/ 9/74
19- K-1082	EL.332,ZONE K-5,REPR. E.FACE COL.K57	1/ 9/74
19- K-1083	EL.332,ZONE K-5,REPR. W.FACE COL.K55	1/ 9/74
19- K-1084	EL.294,ZONE K5,REPAIR AT BEAM	1/ 9/74
19- K-1085	REPAIR DETAIL FOR MIS LOCATED HANGER	1/29/74
19- K-1086	REPAIR AT TOP OF 14WF 202 DIAGONALS	1/31/74
19- K-1087	REPAIR AT SOUTH END OF 24WF100	1/31/74
19- K-1088	REPAIR AT CRACKED PL N.END OF GIRD	1/31/74
19-J -1089	NEW CURB AND BUMPER RAMP J	2/ 1/74
19- K-1090	REPAIR BASE PL-COLH4/ 9,EL332	2/28/74
19- K-1091	ZONE K3,EL332 TOP FLG PL BTWN GIRDS	2/28/74
19-K-1092		3/11/74
19-K-1093.1		4/8/74
19-K-1093.2		4/8/74
19-K-1094.1		10/21/74
19-K-1094.2		10/21/74
19-K-1094.3		10/21/74
19-K-1095		4/14/75
19-J-1096.1		4/14/75
19-J-1096.2		4/14/75
19-J-1096.3		4/14/75
19-J-1097.1		12/4/75
19-J-1097.2		12/4/75
19-J-1097.3		9/4/75
19-K-1098		11/20/75

LICENSED PROFESSIONAL ENGINEER — LESLIE E. ROBERTSON — No. 34360 — UNIVERSITY OF THE STATE OF NEW YORK

SKILLING, HELLE, CHRISTIANSEN, ROBERTSON — *Structural & Civil Engineers*

PROJECT: THE WORLD TRADE CENTER | TITLE: DRAWING BOOK 19 - REVISIONS AFTER FABRICATION | DATE: 7/27/73

REVISIONS

Printed 8-4-74

DWG. NO.	TITLE	DATE
19- B-1100	TEL/CO REV. TWR.B FLOORS 11&12	7/ 9/71
19- B-1101	TEL/CO REV. TWR.B EL.264-294	7/ 9/71
19- B-1102	TEL/CO REV. TWR.B FLOOR 7	1/12/72
19- B-1103	FLOOR 105B BUFFER BEAM	10/25/71
19-A-1104.1	TOWER A FLOOR 44-PLAN	12/10/71
19-A-1104.2	TOWER A FLOOR 44-SECTION	12/10/71
19-A-1104.3	TOWER A FLOOR 44-SECTION	12/10/71
19-A-1105.1	HEAT EXCHANGER & PUMP BASE-TWRA-43	2/18/72
19-A-1105.2	HEAT EXCHANGER & PUMP BASE-TWRA-43	2/18/7
19-B-1106.1	TELCO REVISIONS-TWR B FL.9&10	1/12/72
19-B-1106.2	TELCO REVISIONS-TWR B FL.11&12	1/12/72
19-B-1107	ENLARGE BEAM OPENING TWR B-FL.108	12/13/71
19-B-1108.1	TOWER B-PH-SHAFT 50 EXTENSION	1/10/72
19-B-1108.2	TOWER B-PH-SHAFT 50 EXTENSION	1/10/72
19-B-1108.3	TOWER B-PH-SHAFT 50 EXTENSION	1/10/72
19-B-1108.4	TOWER B-PH-SHAFT 50 EXTENSION	1/10/72
19-B-1108.5	TOWER B-PH-SHAFT 50 EXTENSION	1/10/72
19-B-1108.6	TOWER B-PH-SHAFT 50 EXTENSION	1/10/72
19-B-1108.7	TOWER B-PH-SHAFT 50 EXTENSION	1/10/72
19-B-1108.8	TOWER B-PH-SHAFT 50 EXTENSION	1/10/72
19-B-1108.9	TOWER B-PH-SHAFT 50 EXTENSION	1/10/72
19-B-1108.10	TOWER B-PH-SHAFT 50 EXTENSION	1/10/72
19-B-1108.11	TOWER B-PH-SHAFT 50 EXTENSION	1/10/72
19-B-1108.12	TOWER B-PH-SHAFT 50 EXTENSION	1/10/72
19-B-1108.13	TOWER B-PH-SHAFT 50 EXTENSION	1/10/72
19-B-1108.14	TOWER B-PH-SHAFT 50 EXTENSION	1/10/72
19-B-1108.15	TOWER B-PH-SHAFT 50 EXTENSION	1/10/72
19-B-1108.16	TEMP.RELOCATION OF ELEV.50 MACH.	2/28/72
19-B-1108.17	TEMP.RELOCATION OF ELEV.50 MACH.	2/28/72
19-B-1108.18	TEMP.RELOCATION OF ELEV.50 MACH.	2/28/72
19-B-1108.19	TEMP.RELOCATION OF ELEV.50 MACH.	2/28/72
19-B-1108.20	TEMP.RELOCATION OF ELEV.50 MACH.	2/28/72
19-B-1108.21	TEMP.RELOCATION OF ELEV.50 MACH.	2/28/72
19-B-1108.22	TEMP.RELOCATION OF ELEV.50 MACH.	2/28/72
19-B-1109.1	STRAP ANCHORS-KEYPLAN EL.264 TWR.B	1/25/72
19-B-1109.2	STRAP ANCHORS-KEYPLAN EL.274 TWR.B	1/25/72
19-B-1109.3	STRAP ANCHOR DETS. EL 264&274 TWR.B	1/25/72
19-B-1110	TEMP.DET. BASE PL.TWR B-COL.607&907	1/25/72
19-B-1111	TEMP.BRACING TWR.B-EL 277&260'9*	1/25/72
19-B-1112.1	TOWER B-FL.106 SECTION	3/ 3/72
19-B-1112.2	TOWER B-FL.106 SECTION	3/ 3/72
19- B-1113	WINDOW WASHER DETAIL	4/19/72
19- B-1114	TOWER B FLOOR 10 NEW OPENING	4/20/72
19-B-1115.1	TOWER B EL.284 NEW SLAB OPENING	6/12/72
19-B-1115.2	TOWER B EL.294 NEW SLAB OPENING	6/12/72
19-AK-1116	NEW OPENING PATH KE	12/21/72
19-AK-1117.1	NEW OPENING PATH KE	12/21/72
19-AK-1117.2	NEW OPENING PATH KE	12/21/72
19-AK-1117.3	NEW OPENING PATH KE	12/21/72
19-A -1119	NEW SLAB TOWER A FL. 48	5/15/72
19-A -1120	ENLARGED UPNG TV TRANSMISSION	5/15/72
19- B-1121	PH ROOF UPPER PERIMETER BEAM	7/17/72
19-A 1122.1	VOID	7/27/73
19-A 1122.2	VOID	7/27/73
19-A -1123	VOID	7/27/73
19-A-1124.1	VOID	7/27/73
19-A-1124.2	VOID	7/27/73
19-A-1125.1	VOID	7/27/73
19-A-1125.2	VOID	7/27/73
19-A -1127	VOID	7/27/73
19-A -1122	DUMBWAITER PIT SUPPY. FLOOR 106	11/ 9/73
19-AB1128.1	TWRB&B LOBB.CEIL.WASH SUPPT.CORE	1/ 8/74
19-AB1128.2	TWRB&B LOBB.CEIL.WASH SUPPT.PERIMET.	1/ 8/74
19-AB1128.3	TWRB&B LOBB.CEIL.WASH SUPPT.CORNER	1/ 8/74
19-AB1130.1	SLAB REPAIR-FLOOR 107 TOWER A	7/31/73
19-AB1130.2	SLAB REPAIR-FLOOR 107 TOWER B	7/31/73
19-AB-1131	TWRS. A&B-FL.45 SLAB OVER OPNGS	8/ 3/73
19-AB1132.1	INSTALL.OMITTED SLAB TWR B/EL253	8/ 7/73
19-AB1132.2	INSTALL.OMITTED SLAB TWR B/EL253	8/ 7/73
19-AB-1133	CORNER SLOPNG PARAPET PH-TWR A&B	8/17/73
19-AB-1135	BEAM DET/CONN.AT ESCALATOR FL.110	8/16/73
19- B-1136	SHAFT WALL ANCHORAGE DETAIL	9/24/73
19-A -1137	DUMBWAITER MACHINE SUPPORT-FL.108	1/ 3/74
19- B-1138	NEW BEAM OPNG.TOWER B FL.107	1/15/74
19- B-1140	REPAIR TWR B OBSERVAT DECK ESCALATOR	2/27/74

DWG. NO.	DATE
19-A-1141	2/28/74
19-A-1142	11/14/74
19-A-1143.1	12/16/74
19-A-1143.2	12/16/74
19-A-1144	12/16/74
19-A-1145	2/25/75
19-A-1146	2/20/75
19-A-1147.1	3/20/75
19-A-1147.2	3/20/75
19-A-1147.3	2/24/75
19-A-1147.4	2/24/75
19-A-1147.5	2/24/75
19-A-1147.6	2/24/75
19-A-1147.7	2/24/75
19-A-1147.8	3/20/75
19-A-1147.9	2/24/75
19-A-1148	4/15/75
19-A-1149	4/15/75
19-A-1150.1	8/8/75
19-A-1150.2	5/23/75
19-A-1150.3	5/23/75
19-A-1150.4	5/23/75
19-A-1150.5	5/23/75
19-A-1150.6	8/8/75
19-A-1151	9/4/75
19-A-1152	3/30/77

LICENSED PROFESSIONAL ENGINEER — LESLIE E. ROBERTSON — No. 34360 — OF THE STATE OF NEW YORK

SKILLING, HELLE, CHRISTIANSEN, ROBERTSON — Structural & Civil Engineers

PROJECT	TITLE	DATE
THE WORLD TRADE CENTER	DRAWING BOOK 19 - REVISIONS AFTER FABRICATION	5/18/73

REVISIONS

DWG. NO.	TITLE	DATE
19-E -2001	NE BLDG.FIELD REPAIR	3/15/71
19-E -2002	NE BLDG.FIELD REPAIR	3/22/71
19-E -2003	NE BLDG.FIELD REPAIR	4/10/72
19-E -2004	NE BLDG TEMP. OPENING	7/ 9/71
19-E -2005.1	TEMP. SUPPORT FOR PIPING	11/10/71
19-E -2005.1	ALT. TEMP. SUPPORT FOR PIPING	VOID
19-E -2005.2	TEMP. SUPPORT FOR PIPING	11/10/71
19-E -2005.2	ALT. TEMP. SUPPORT FOR PIPING	VOID
19-E -2005.3	TEMP. SUPPORT FOR PIPING	12/20/71
19-E -2006	REPAIR FL.10 SOUTH	12/29/71
19-E -2007.1	PIPING THRU BEAM	11/ 1/71
19-E -2007.2	PIPING THRU BEAM	11/ 1/71
19-E -2008	PIPING THRU BEAM	11/ 1/71
19-E -2009	PIPING THRU BEAM	11/ 1/71
19-E -2010.1	BEAM OPENINGS ELEV. 332	11/ 1/71
19-E -2010.2	BEAM OPENINGS ELEV. 332	11/ 1/71
19-E -2011	CONC. OPENINGS ELEV. 332	11/ 1/71
19-E -2012.1	PLAZA SECT.AT BLDG. EDGE	1/21/72
19-E -2012.2	PLAZA SECT.AT BLDG. EDGE	1/21/72
19-E -2012.3	PLAZA SECT.AT BLDG. EDGE	1/21/72
19-E -2012.4	PLAZA SECT.AT BLDG. EDGE	1/21/72
19-E -2013.1	BASE PAD/TURNTABLE & CHARGE CHMBR.	2/29/72
19-E -2013.2	BASE PAD/TURNTABLE & CHARGE CHMBR.	2/29/72
19-E -2014	NEW OPENING-EL332 NE BUILDING	2/18/72
19-E -2015	NEW OPENINGS EL.332	4/10/72
19-E -2016	NEW OPENINGS EL.332	3/24/72
19-E -2017	NE BLDG.EL.332 CANT. SLAB SUPPORT	5/22/72
19-E -2018	CONCRETE OPENING	9/18/72
19-E-2019		7/6/73
19-B-2100.1	MODIF.TO P.H. ROOF FRAMING PLAN	9/27/71
19-B-2100.2	MODIF.TO P.H. ROOF FRAMING PLAN	9/27/71
19-B-2100.3	MODIF.TO P.H. ROOF FRAMING PLAN	9/27/71
19-B-2100.4	MODIF.TO P.H. ROOF FRAMING PLAN	9/27/71
19-K-2200		10/4/71

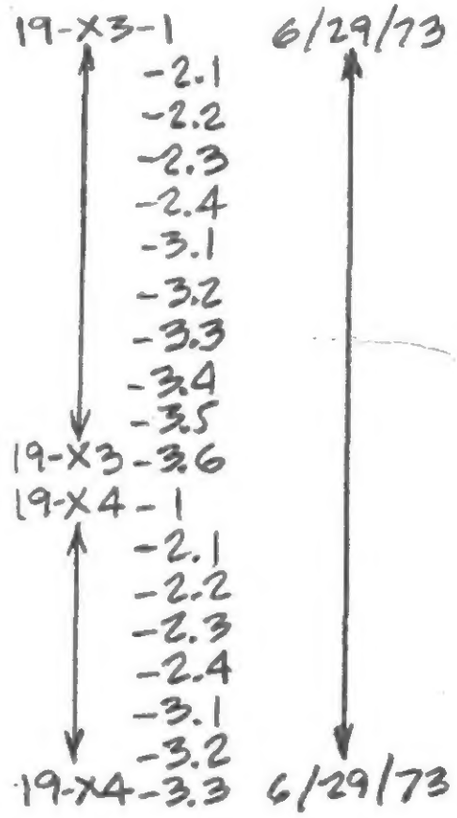

SKILLING - HELLE - CHRISTIANSEN - ROBERTSON Structural & Civil Engineers

PROJECT	TITLE	DATE
THE WORLD TRADE CENTER	DRAWING BOOK 19 - REVISIONS AFTER FABRICATION - GENERAL NOTES	8/15/68

REVISIONS

3-12-69

GENERAL NOTES

1. The details given in Book 19 define revisions to be made to previously fabricated steel members, or to members under fabrication.

2. The location of such revisions and the detail number are shown in Structural Steel Plans, using the following symbol:

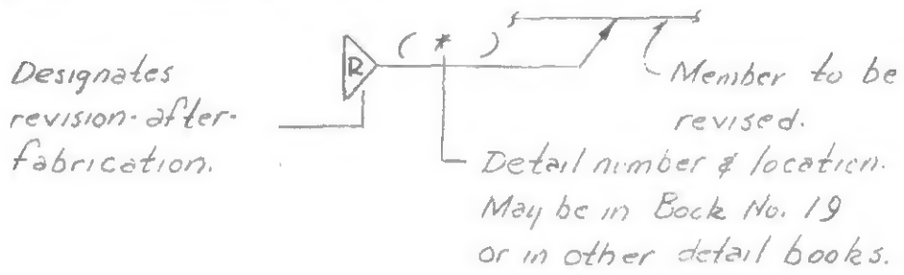

Details of revisions-after-fabrication may be given in Book 19, or in other detail books. When details are in Book 19, the symbol shown in plans reads:

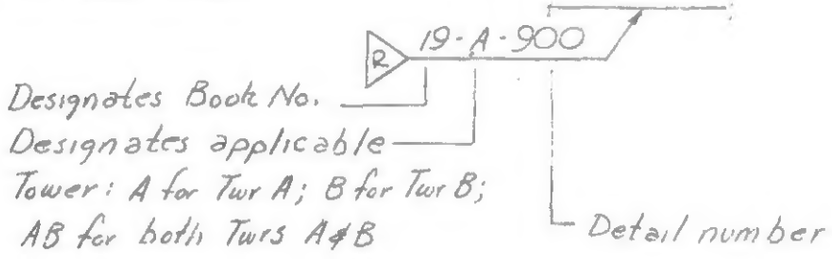

3. Member numbers used in the details of Book 19 are the member numbers shown in Erection Plans and other shop drawings using the system:

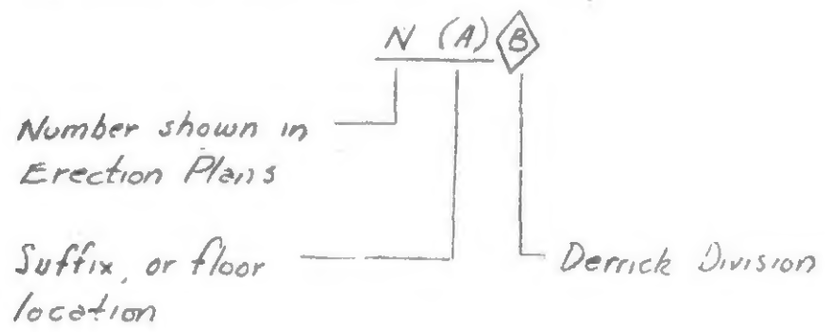

4. Revisions after fabrication shall conform to current AISC and AWS specifications for building construction, and to project drawings and specifications for the fabricated members being revised.

5. Standard AISC connections shall be used where shown in the drawings, or where member reactions are given in kips, or where connection details are not otherwise shown. Bolted connections shall have a minimum of two 3/4" Ø A325 bolts, unless otherwise shown.

6. All bolts shall be ASTM A325, friction-type, unless otherwise shown in the drawings.

7. All manual welding electrodes shall be E70XX low hydrogen, unless otherwise shown in the drawings.

8. All steel parts shall be ASTM A36, unless otherwise shown in the drawings.

9. The requirements and general notes given in the following drawings apply to the details of Book 19 when pertinent:

   1-A2-44
   5-AB1-0
   6-AB1-1

10. Permanent members which are gouged, cut or otherwise damaged during revision work shall be restored to their original condition. Gouges and cuts shall be repaired by filling with weld metail and grinding smooth.

11. The Contractor may propose alternate connection details using bolts in lieu of welds shown in drawings, by submitting a drawing of the alternate detail for approval. No deviation from the details originally shown in the drawings is permitted without the approval of alternate drawings.

LICENSED PROFESSIONAL ENGINEER ★ LESLIE E. ROBERTSON ★ No. 34960 ★ UNIVERSITY OF THE STATE OF NEW YORK

SKILLING, HELLE, CHRISTIANSEN, ROBERTSON — Structural & Civil Engineers

PROJECT THE WORLD TRADE CENTER | TITLE REVISION AFTER FABRICATION DETAIL 900 | DATE 8-15-68

REVISIONS

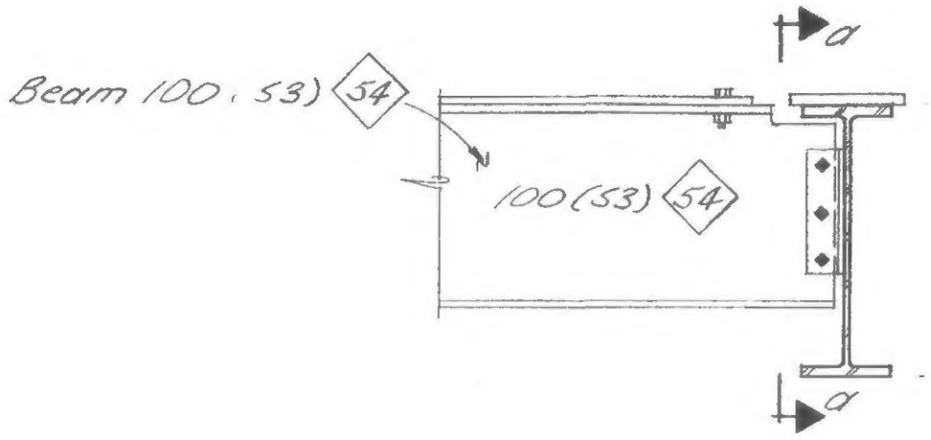

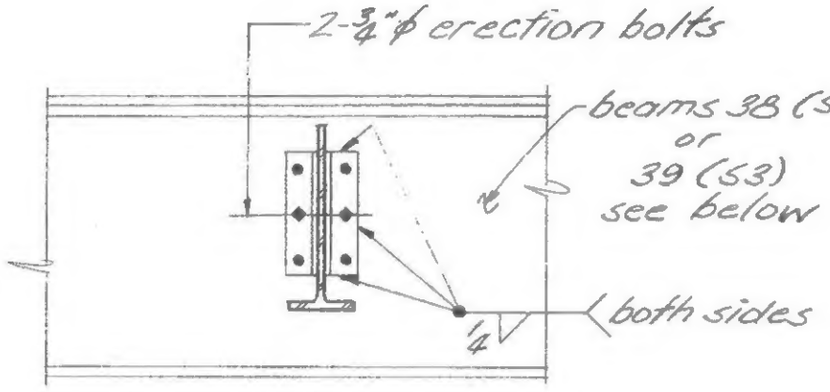

Sec. a-a

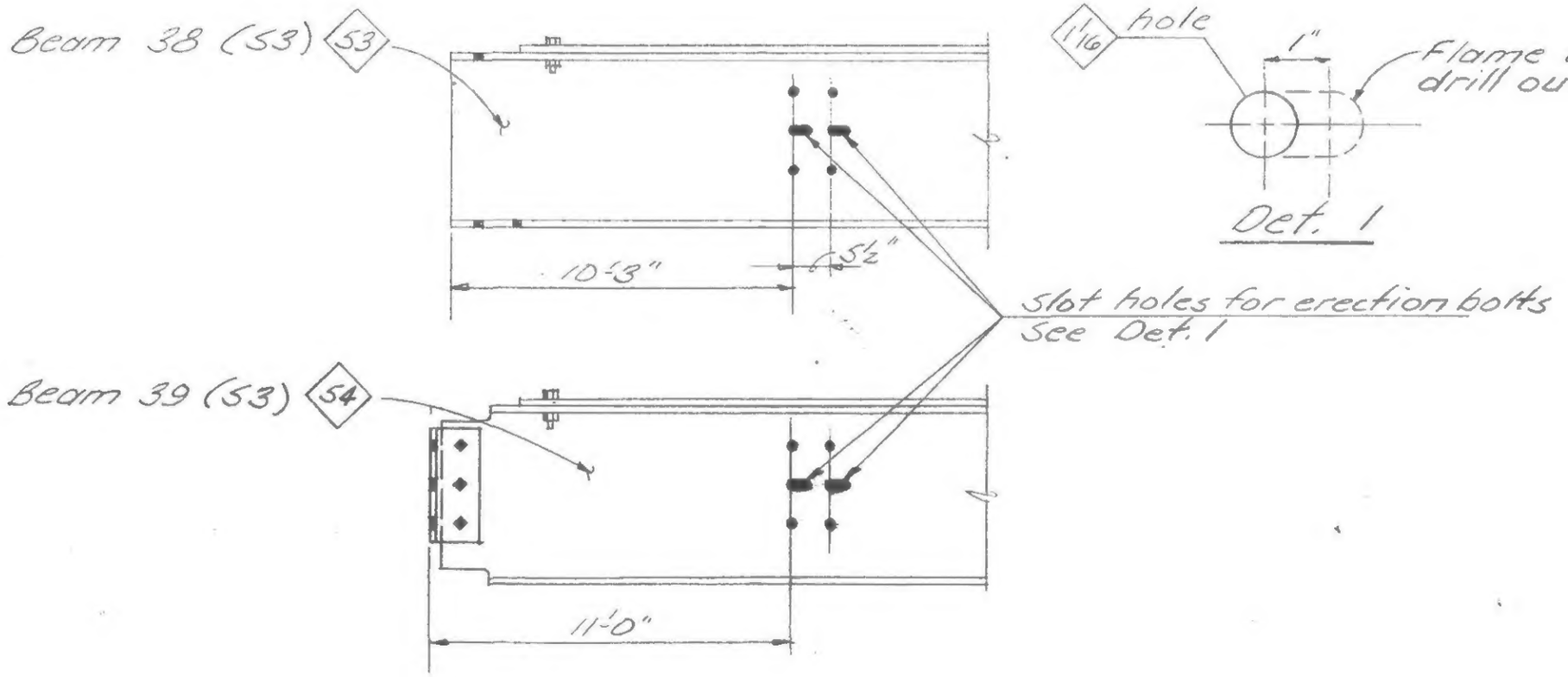

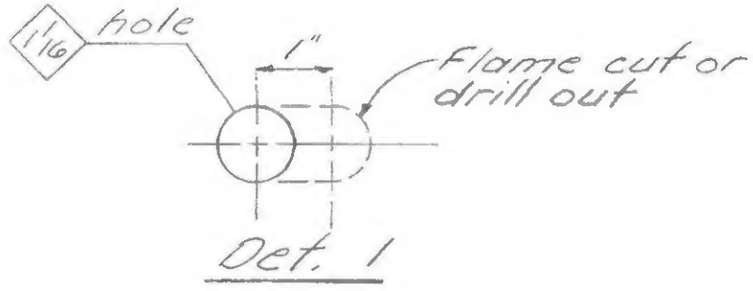

Det. 1

LICENSED PROFESSIONAL ENGINEER — LESLIE E. ROBERTSON — No. 34360 — UNIVERSITY OF THE STATE OF NEW YORK

DESIGNED

DRAWN

REVIEWED

19-A-900

SKILLING, HELLE, CHRISTIANSEN, ROBERTSON — Structural & Civil Engineers

PROJECT: THE WORLD TRADE CENTER | TITLE: REVISION AFTER FABRICATION DETAIL 901 | DATE: 8-15-68

REVISIONS

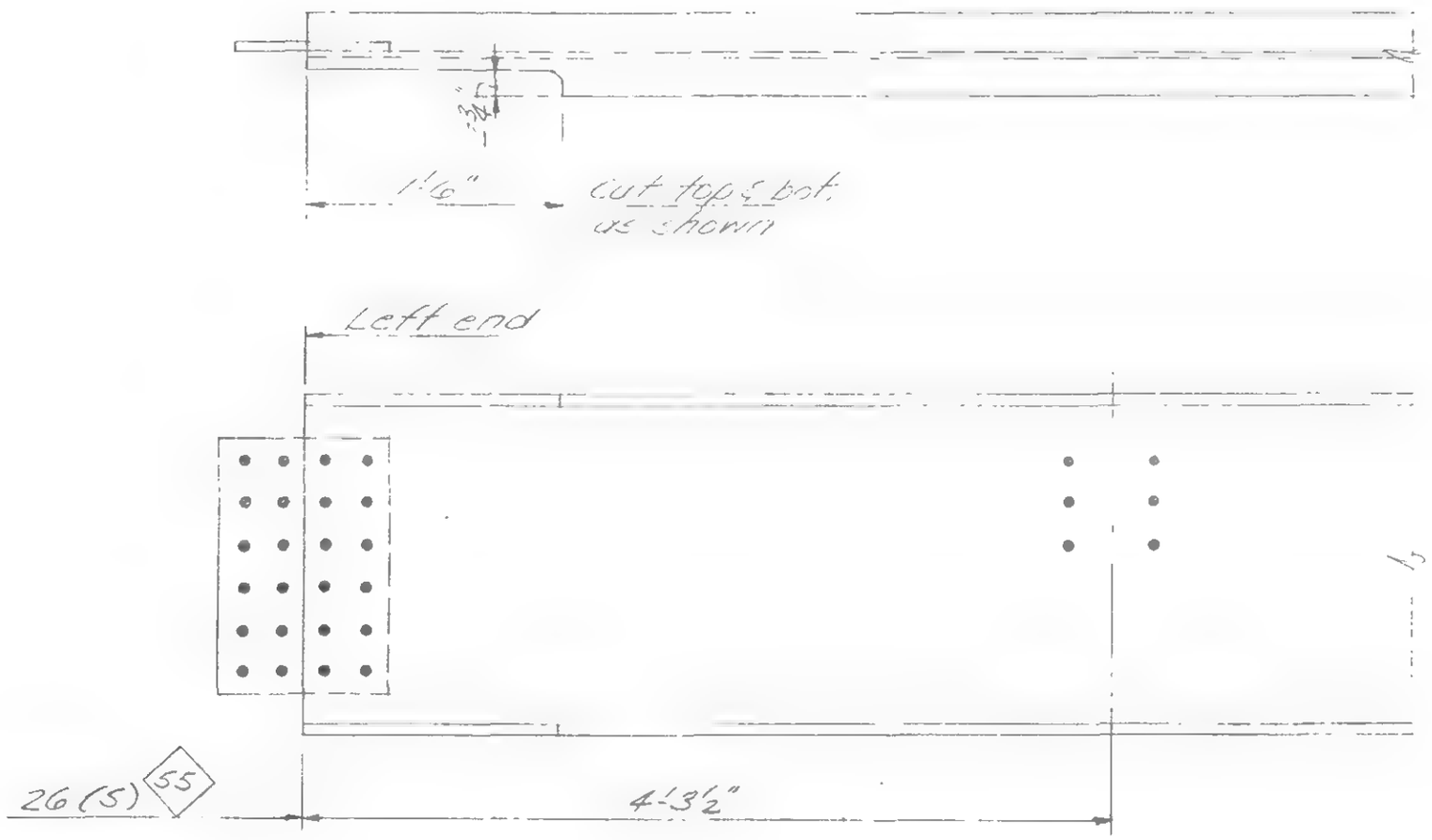

LICENSED PROFESSIONAL ENGINEER
LESLIE E. ROBERTSON
No. 34360
UNIVERSITY OF THE STATE OF NEW YORK

DESIGNED

DRAWN

REVIEWED

19-A-901

SKILLING, HELLE, CHRISTIANSEN, ROBERTSON — Structural & Civil Engineers

PROJECT: THE WORLD TRADE CENTER | TITLE: REVISION AFTER FABRICATION DETAIL 903 | DATE: 8-15-68

REVISIONS

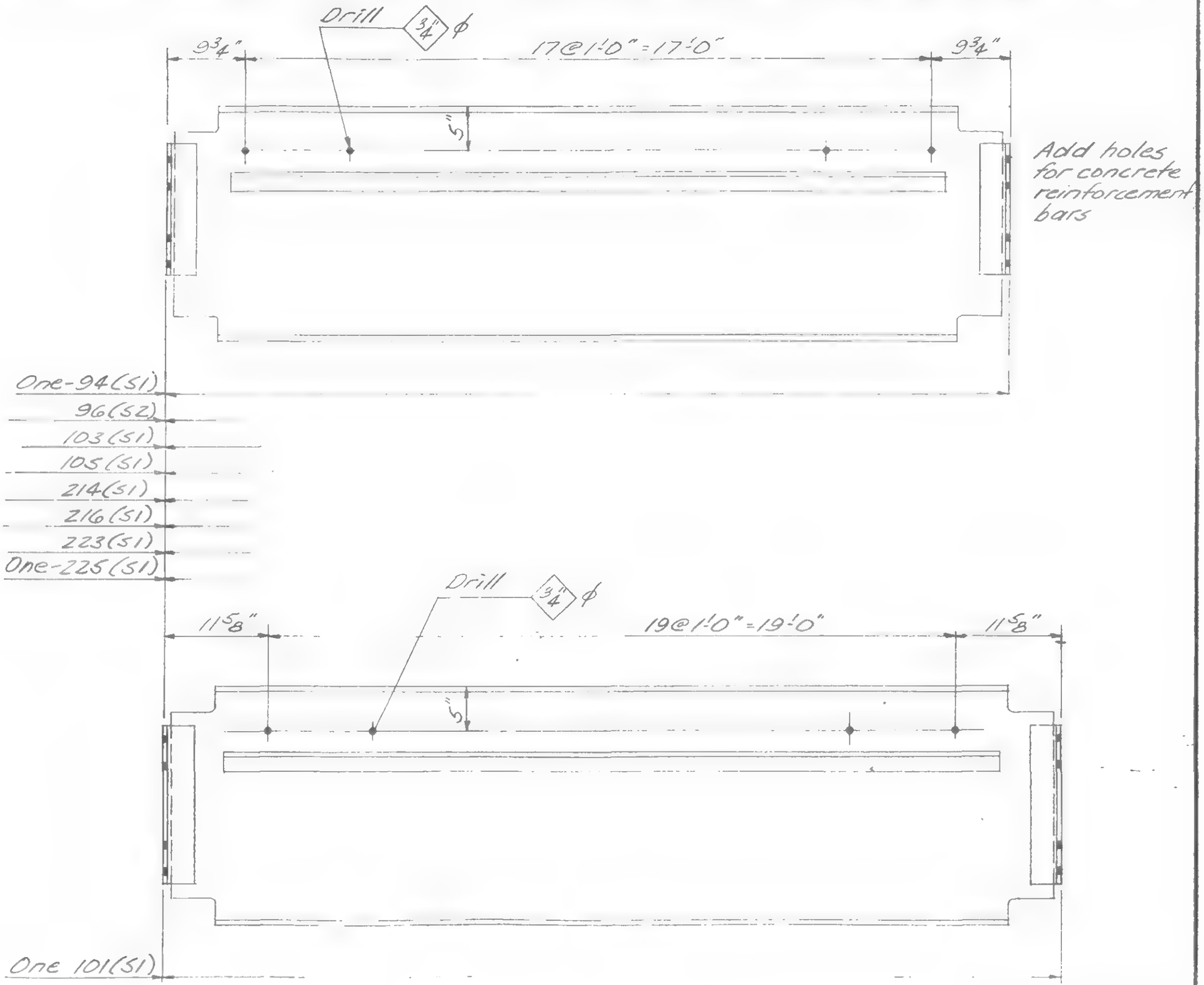

DESIGNED

DRAWN

REVIEWED

19-A-903

SKILLING, HELLE, CHRISTIANSEN, ROBERTSON — Structural & Civil Engineers

PROJECT: THE WORLD TRADE CENTER

TITLE: REVISION AFTER FABRICATION DETAIL 904

DATE: 8-15-68

REVISIONS

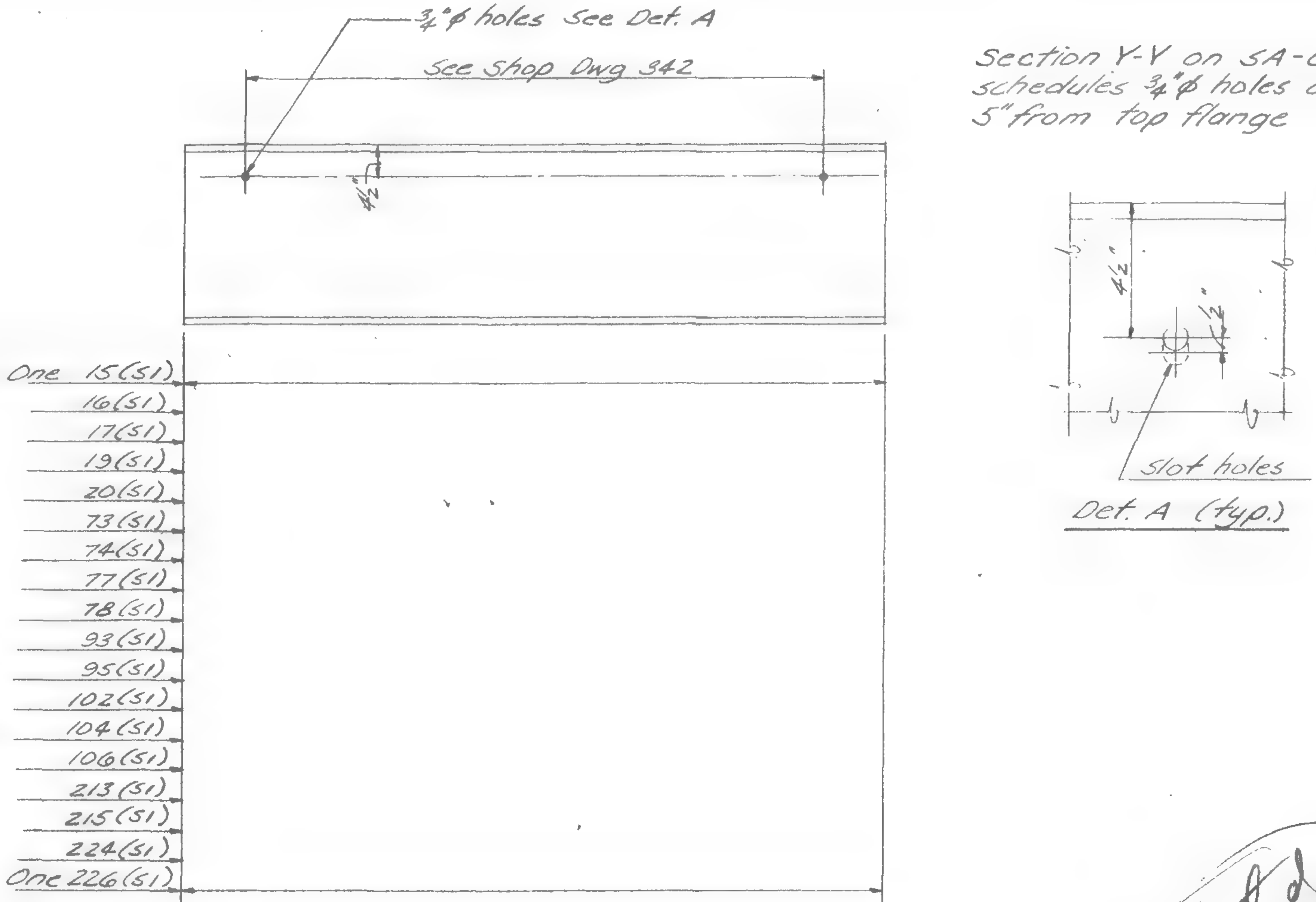

deleted from Set before 1st issue - change Slip SHCR 095 disapproved by NIL of PNYA UAB

LICENSED PROFESSIONAL ENGINEER
LESLIE E. ROBERTSON
No. 34360
UNIVERSITY OF THE STATE OF NEW YORK

Deleted (see @ letter)

SIGNED

DRAWN

REVIEWED

19-A-904

SKILLING, HELLE, CHRISTIANSEN, ROBERTSON — Structural & Civil Engineers

PROJECT THE WORLD TRADE CENTER | TITLE REVISION AFTER FABRICATION DETAIL 905 | DATE 8-15-68

REVISIONS

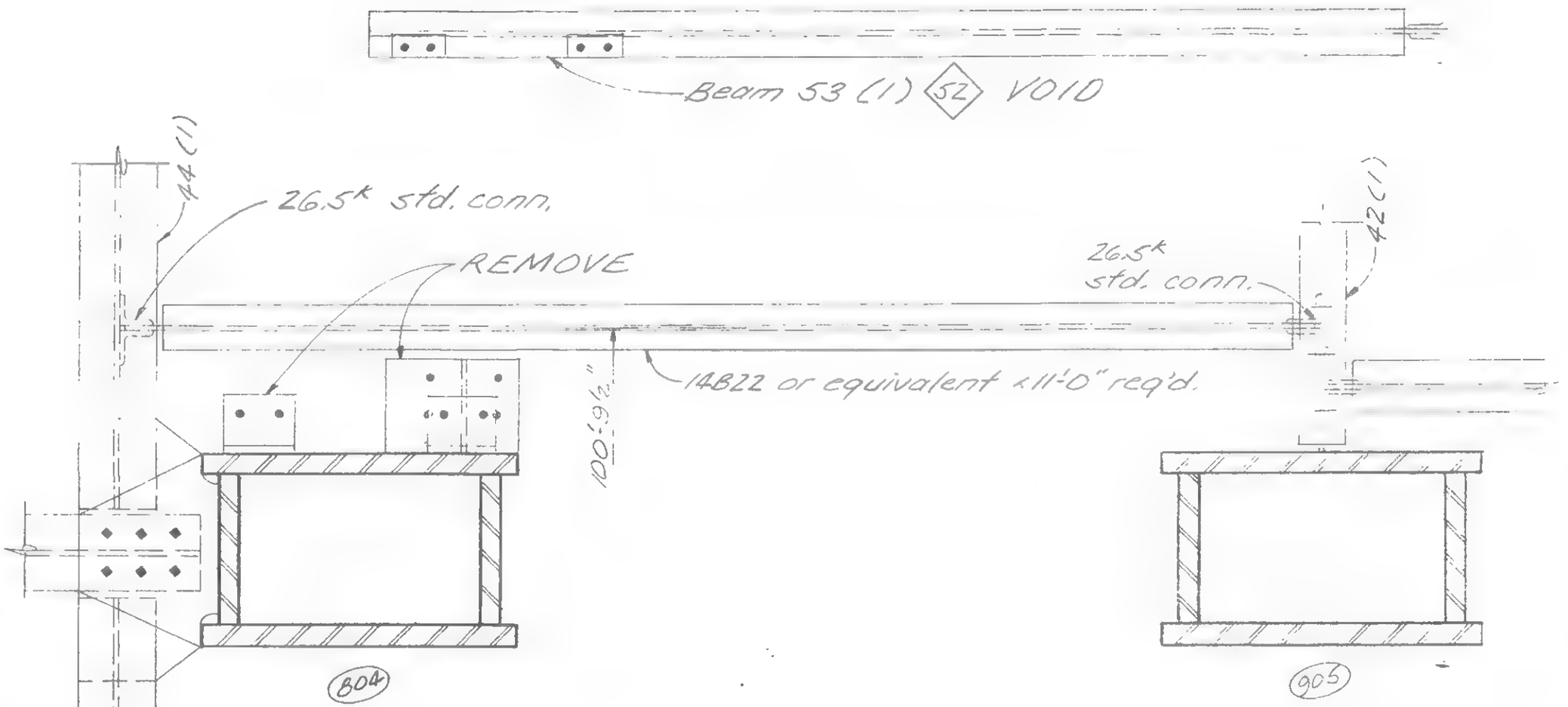

LICENSED PROFESSIONAL ENGINEER
LESLIE E. ROBERTSON
No. 34360
UNIVERSITY OF THE STATE OF NEW YORK

DESIGNED

DRAWN

REVIEWED

19-A-905

SKILLING, HELLE, CHRISTIANSEN, ROBERTSON — Structural & Civil Engineers

PROJECT: THE WORLD TRADE CENTER | TITLE: REVISION AFTER FABRICATION DETAIL 906 | DATE: 8-15-68

REVISIONS

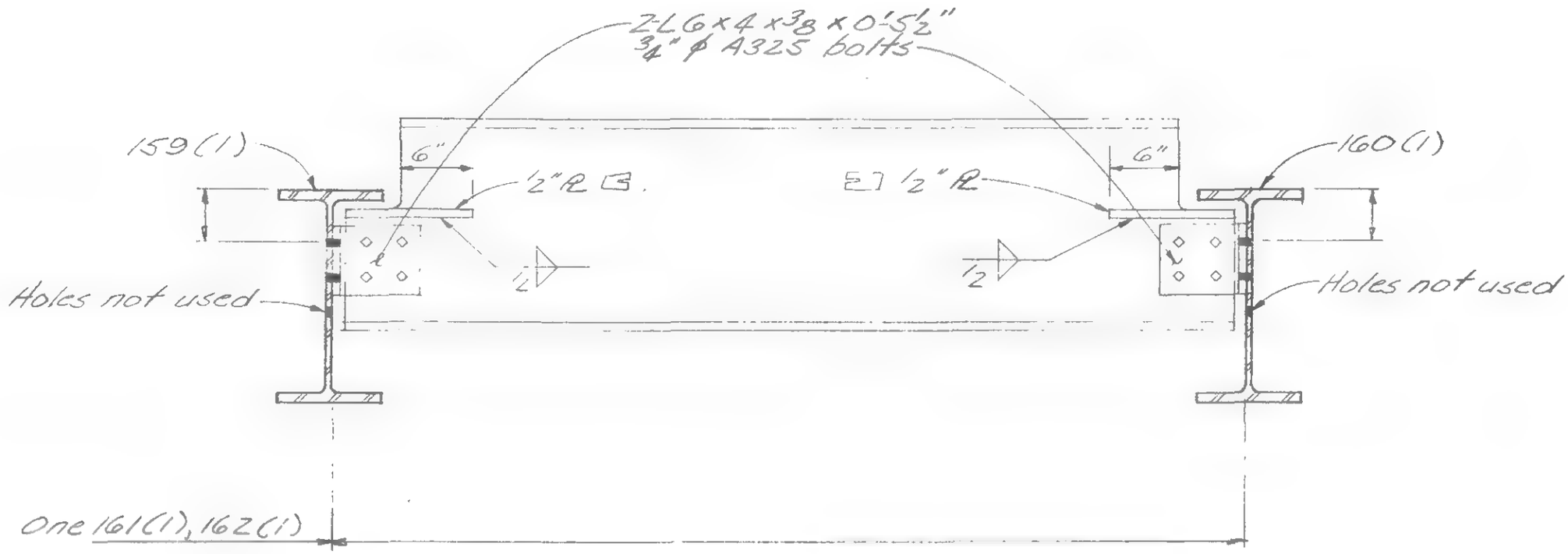

Remove present angle details, block, drill, and add new details as shown.

LICENSED PROFESSIONAL ENGINEER — LESLIE E. ROBERTSON — No. 34360 — UNIVERSITY OF THE STATE OF NEW YORK

DESIGNED

DRAWN

REVIEWED

19-A-906

SKILLING, HELLE, CHRISTIANSEN, ROBERTSON — Structural & Civil Engineers

PROJECT: THE WORLD TRADE CENTER | TITLE: REVISION AFTER FABRICATION DETAIL 907 | DATE: 8-15 68

REVISIONS

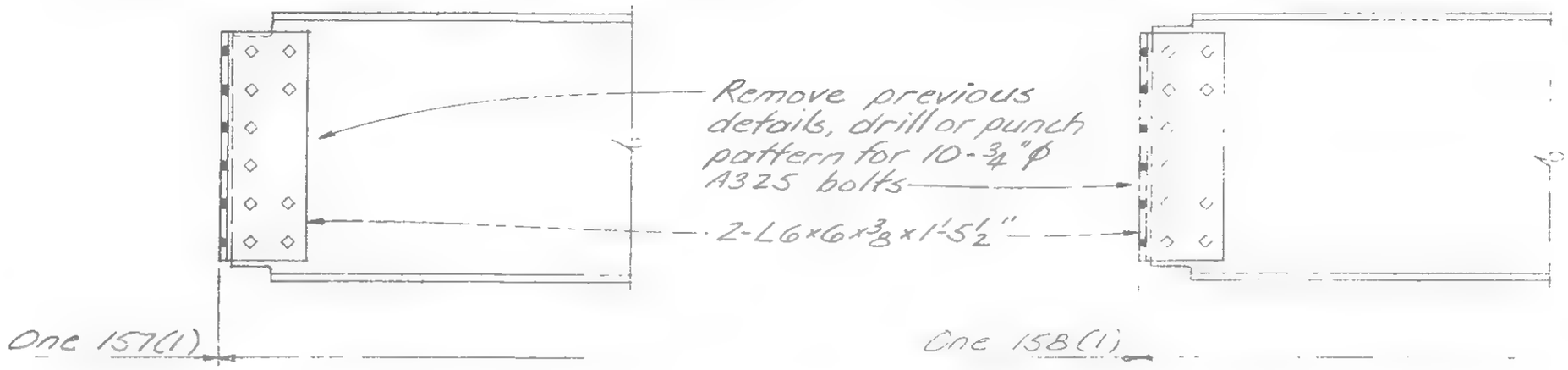

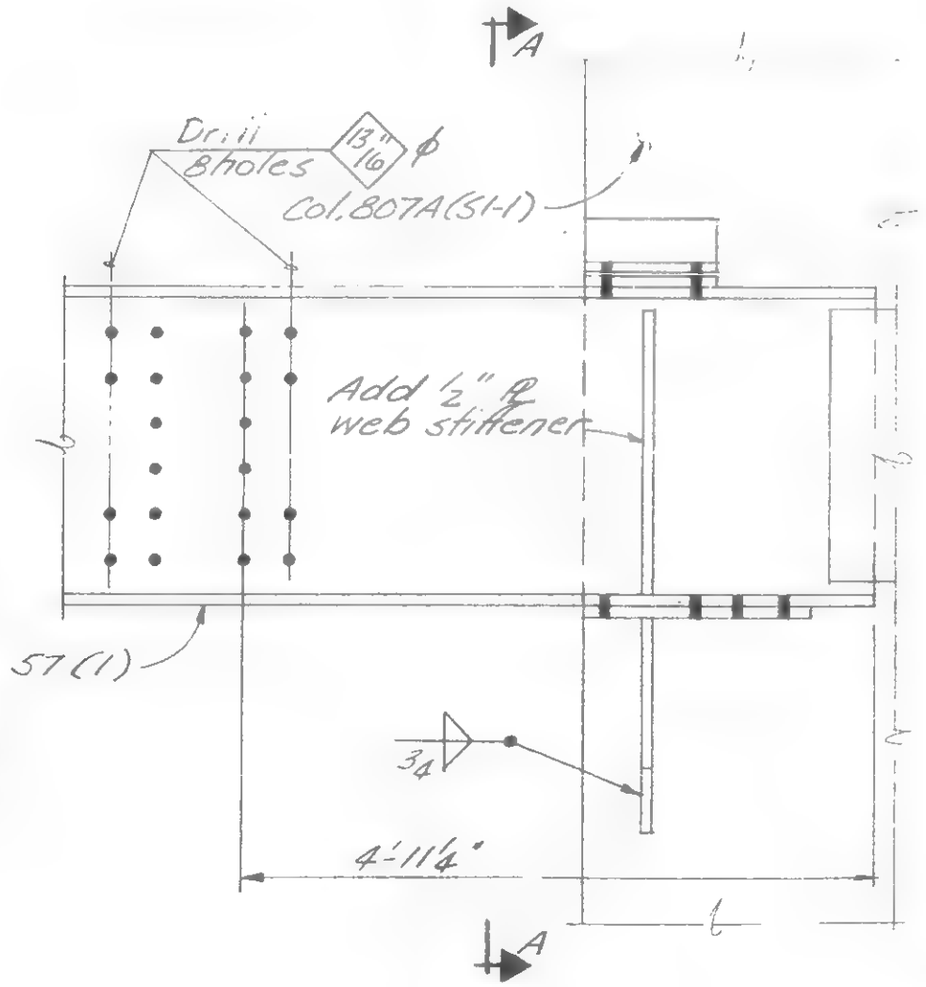

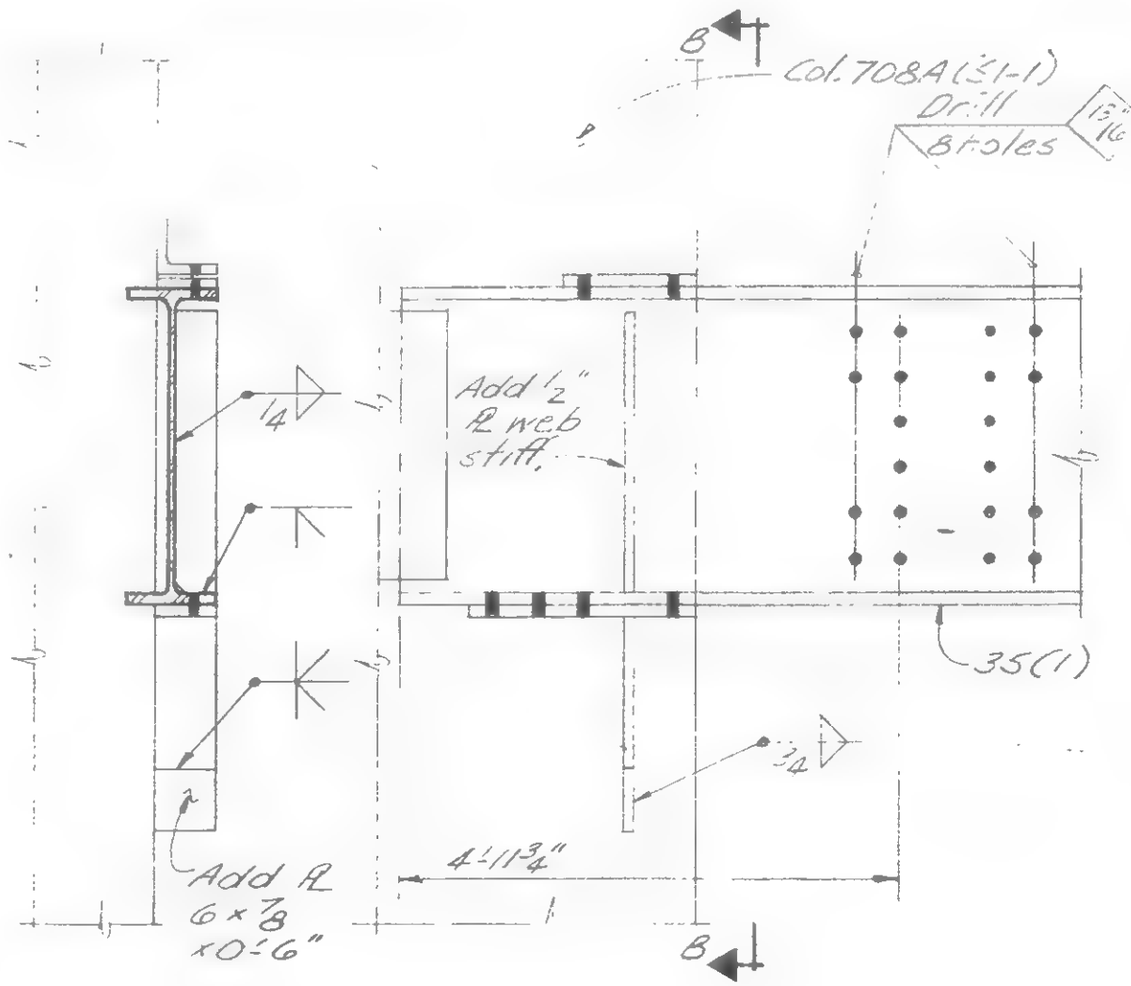

Sec. A-A
Sec B-B opp. hand

LICENSED PROFESSIONAL ENGINEER — LESLIE E. ROBERTSON — No. 34360 — UNIVERSITY OF THE STATE OF NEW YORK

DESIGNED

DRAWN

REVIEWED

19-A-907

SKILLING, HELLE, CHRISTIANSEN, ROBERTSON — Structural & Civil Engineers

PROJECT THE WORLD TRADE CENTER | TITLE REVISION AFTER FABRICATION DETAIL 908 | DATE 8-15-68

REVISIONS

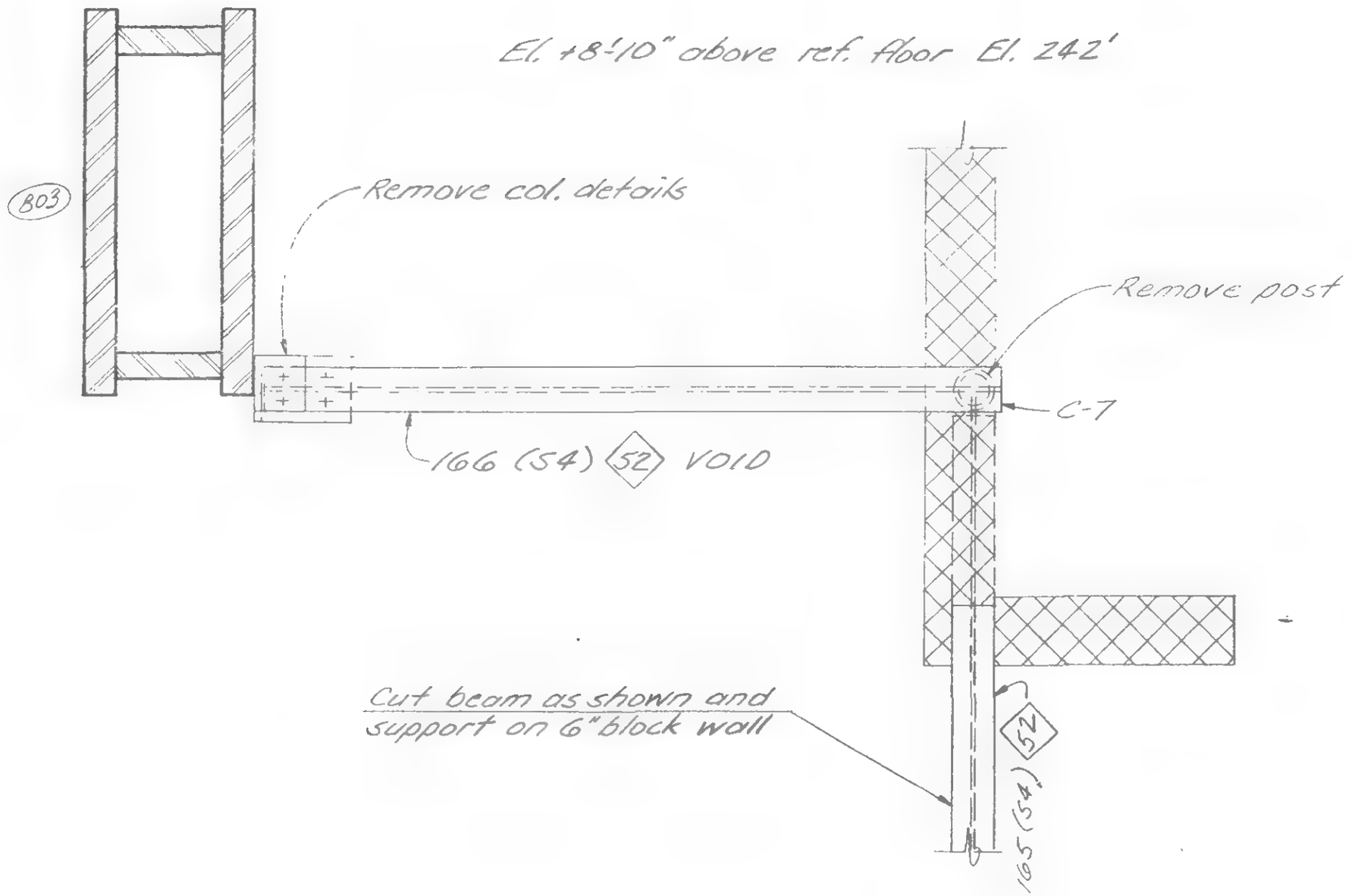

LICENSED PROFESSIONAL ENGINEER
LESLIE E. ROBERTSON
No. 34360
UNIVERSITY OF THE STATE OF NEW YORK

DESIGNED

DRAWN

REVIEWED

19-A-908

SKILLING, HELLE, CHRISTIANSEN, ROBERTSON — Structural & Civil Engineers

PROJECT THE WORLD TRADE CENTER | TITLE REVISION AFTER FABRICATION DETAIL 909 | DATE 8-15-68

REVISIONS

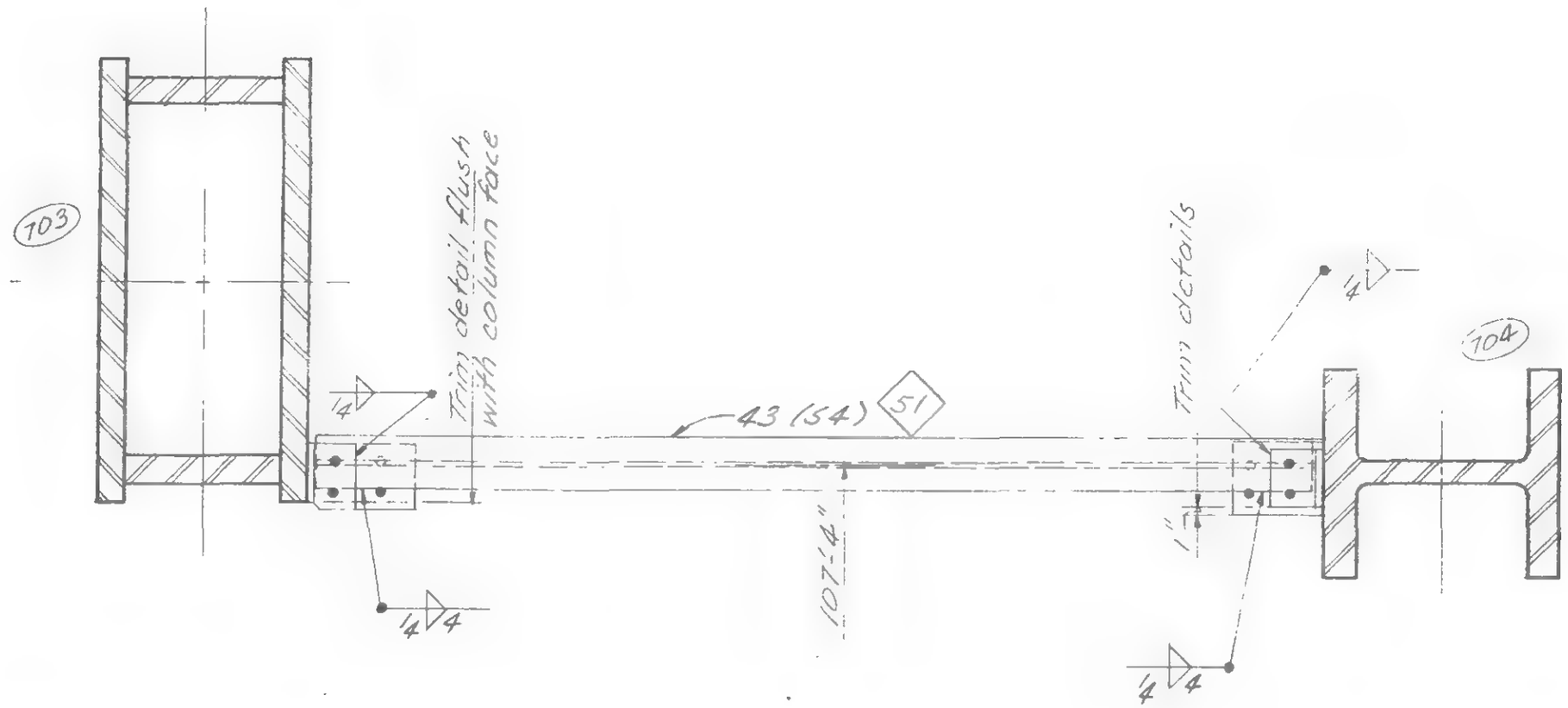

At +13'-2" above El. 242

LICENSED PROFESSIONAL ENGINEER — LESLIE E. ROBERTSON — No. 34960 — UNIVERSITY OF THE STATE OF NEW YORK

DESIGNED

DRAWN

19-A-909

SKILLING, HELLE, CHRISTIANSEN, ROBERTSON — Structural & Civil Engineers

PROJECT THE WORLD TRADE CENTER | TITLE REVISION AFTER FABRICATION DETAIL 910 | DATE 8-15-68

REVISIONS

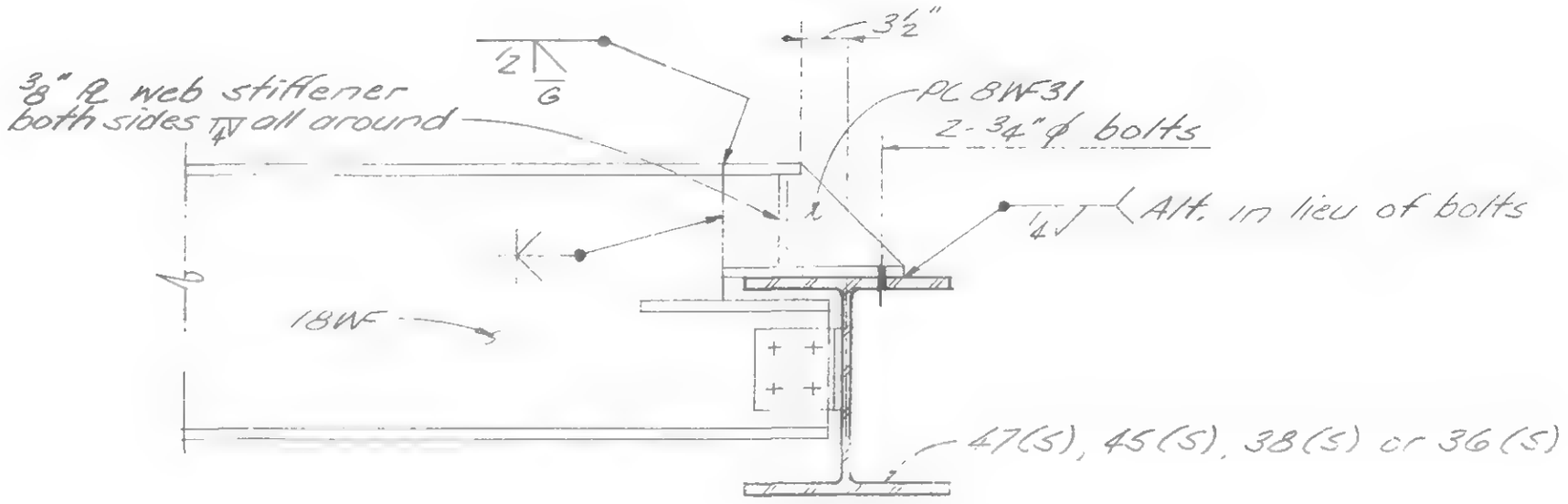

Leftend on Framing Plan	
	2-102(S)
	One-105(S)
	106(S)
	112(S)
	113(S)
	115(S)
	One-116(S)

LICENSED PROFESSIONAL ENGINEER — LESLIE E. ROBERTSON — No. 34360 — UNIVERSITY OF THE STATE OF NEW YORK

DESIGNED

DRAWN

REVIEWED

19-A-910

SKILLING, HELLE, CHRISTIANSEN, ROBERTSON — Structural & Civil Engineers

PROJECT THE WORLD TRADE CENTER | TITLE REVISION AFTER FABRICATION DETAIL 911 | DATE 8-15-68

REVISIONS

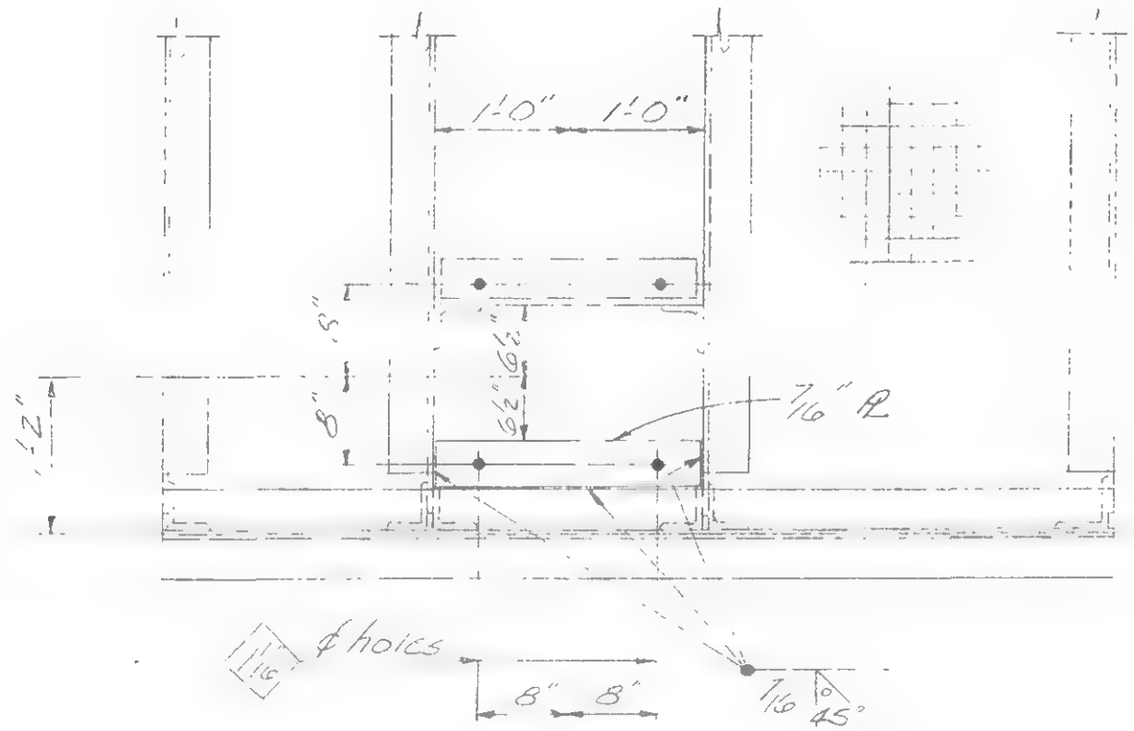

ONE-PUMP PLATFORM 279(5)
Revise both ends as shown

LICENSED PROFESSIONAL ENGINEER
LESLIE E. ROBERTSON
No. 34360
UNIVERSITY OF THE STATE OF NEW YORK

DESIGNED

DRAWN

REVIEWED

19-2-911

SKILLING, HELLE, CHRISTIANSEN, ROBERTSON — Structural & Civil Engineers

PROJECT	TITLE	DATE
THE WORLD TRADE CENTER	REVISION AFTER FABRICATION - DETAIL 912	10-7-68

REVISIONS

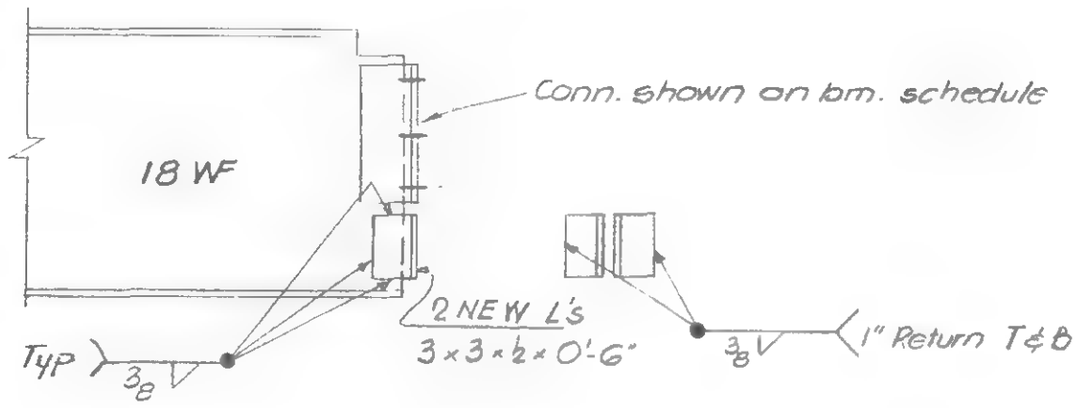

BM. 3988 @ 264'-0" Level

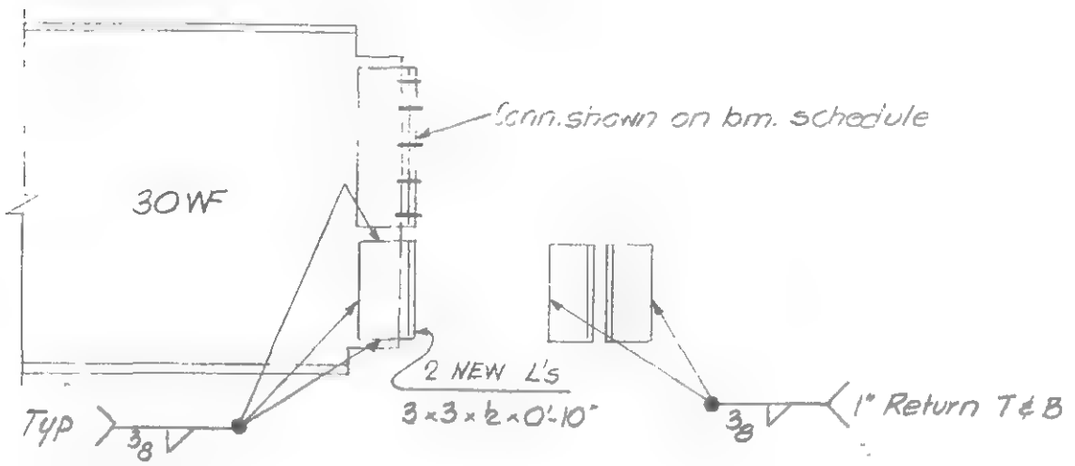

BM. 3915 & 3977 @ 264'-0" level

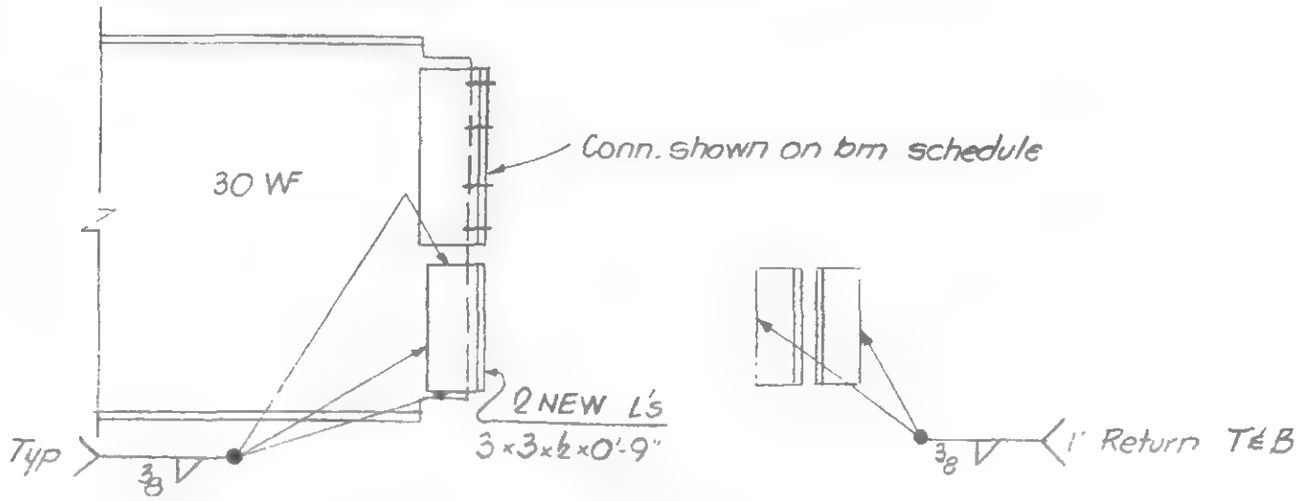

BM. 597 & 3916 @ 284'-0" level

LICENSED PROFESSIONAL ENGINEER
LESLIE E. ROBERTSON
No. 34980
STATE OF NEW YORK

SIGNED

DRAWN

REVIEWED

19-AB-912

SKILLING, HELLE, CHRISTIANSEN, ROBERTSON — Structural & Civil Engineers

PROJECT: THE WORLD TRADE CENTER | TITLE: REVISION AFTER FABRICATION - DETAIL 913 | DATE: 10/9/68

REVISIONS

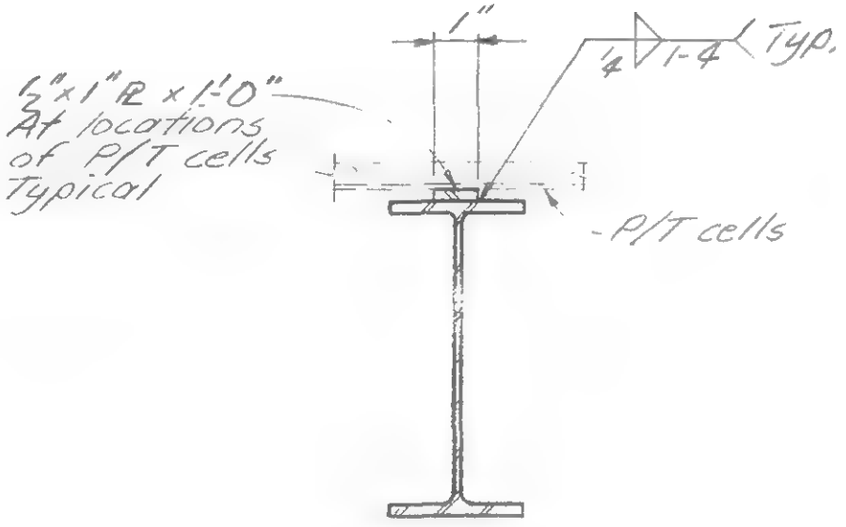

AT W BEAMS

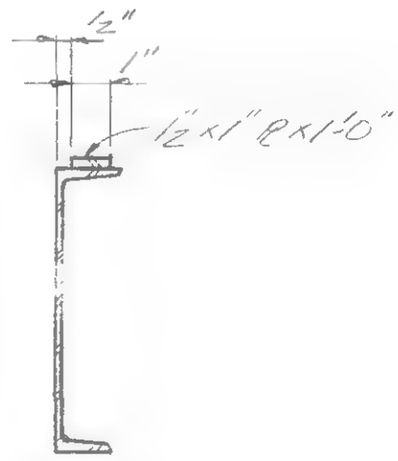

AT C BEAMS

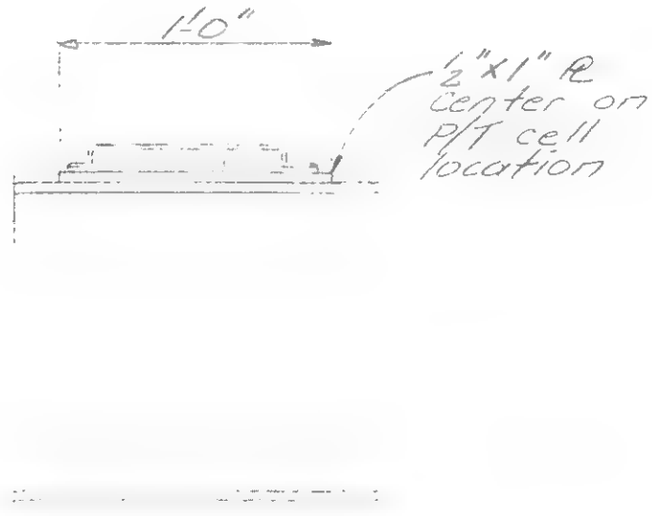

TYPICAL ELEVATION

LICENSED PROFESSIONAL ENGINEER
LESLIE E. ROBERTSON
No. 34360
STATE OF NEW YORK

DESIGNED

DRAWN
- Adams

REVIEWED

S-R-913

SKILLING, HELLE, CHRISTIANSEN, ROBERTSON — Structural & Civil Engineers

PROJECT: THE WORLD TRADE CENTER | TITLE: REVISION AFTER FABRICATION DETAIL 914 | DATE: 11-20-68

REVISIONS

(WTC-500.026)
Field drill 2 holes to top flange of beam for ¾"ø H.S. bolts (A-325 friction type). Bolts & washers were originally provided for web connection as shown in dotted lines.

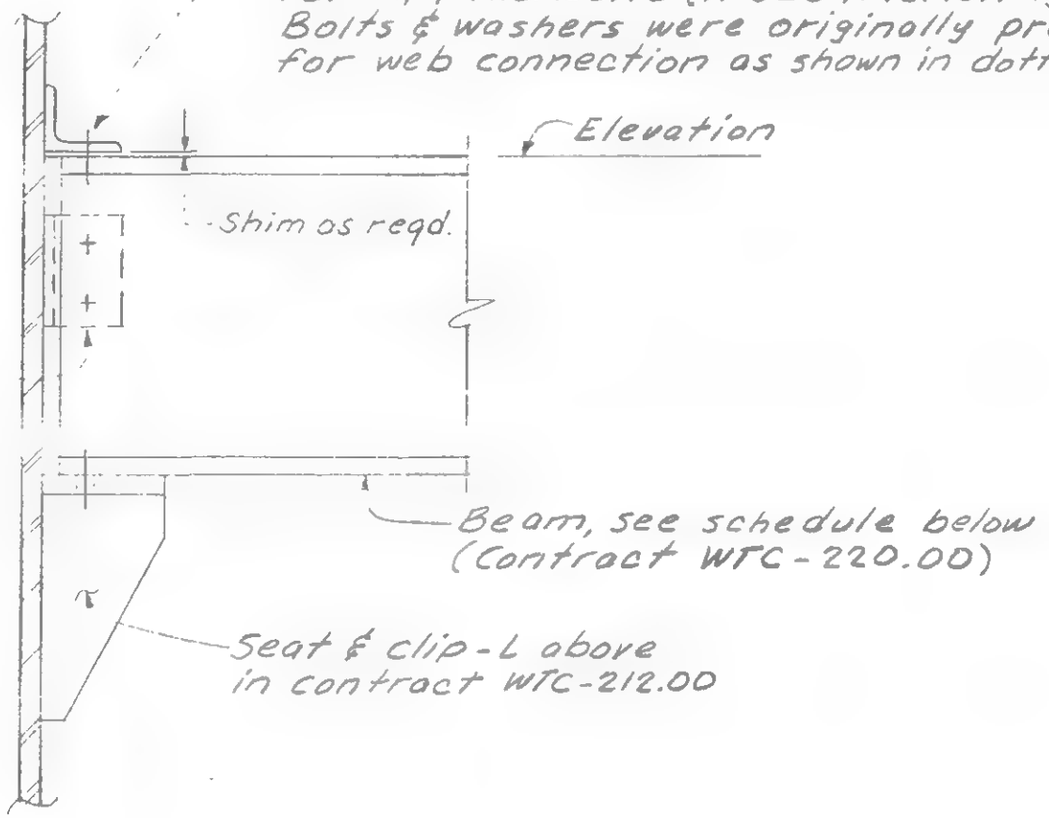

DETAIL NO.	BEAM	
	SIZE	ELEVATION
A-401	18WF55	307'-5"
A-402	24B55	307'-11"
A-403	18WF55	307'-11"
A-404	18WF55	307'-11"
A-405	18WF55	308'-1"
A-406	18WF55	308'-1"
A-407	18WF55	308'-3"

DESIGNED

DRAWN

REVIEWED

19-A-914

SKILLING - HELLE - CHRISTIANSEN - ROBERTSON Structural & Civil Engineers

PROJECT THE WORLD TRADE CENTER | TITLE REVISION AFTER FABRICATION - DETAIL 915 | DATE 11-29-68

REVISIONS

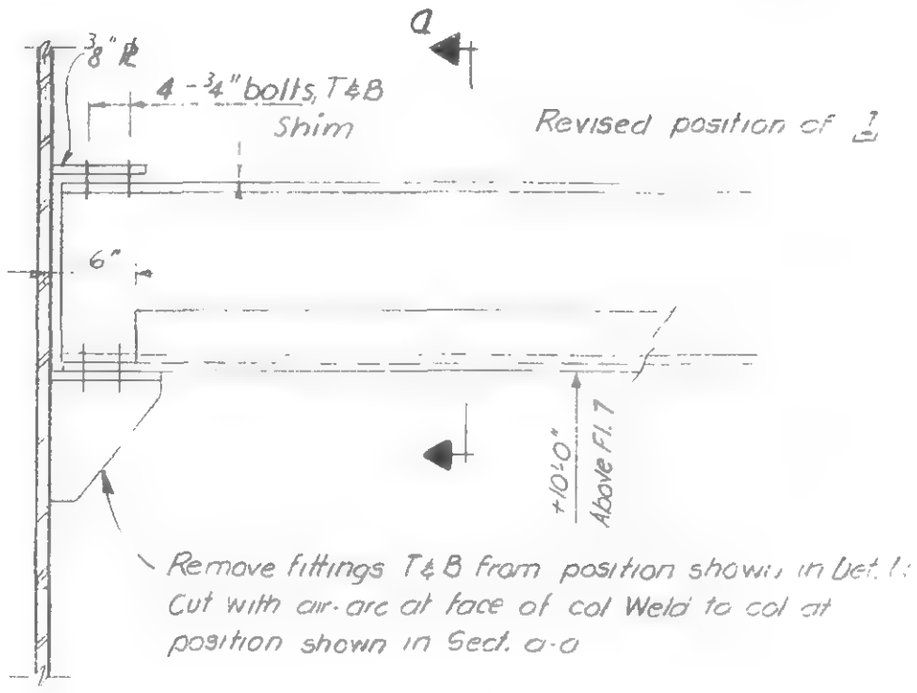

Detail M

Connection after Revision

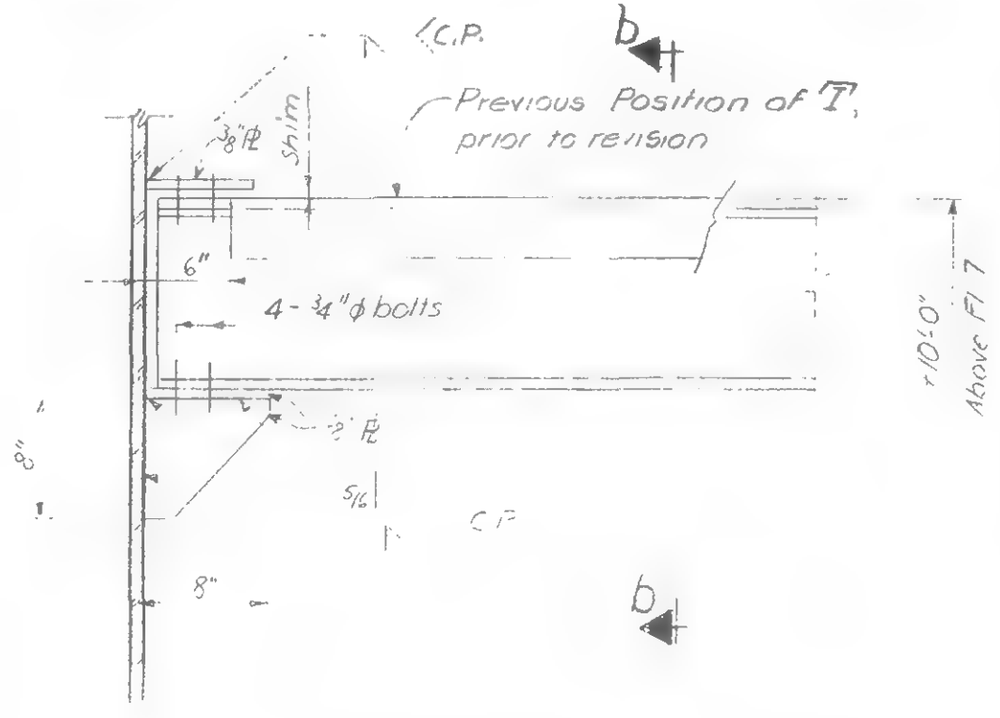

Detail N

Connection as Fabricated on column Before Revision

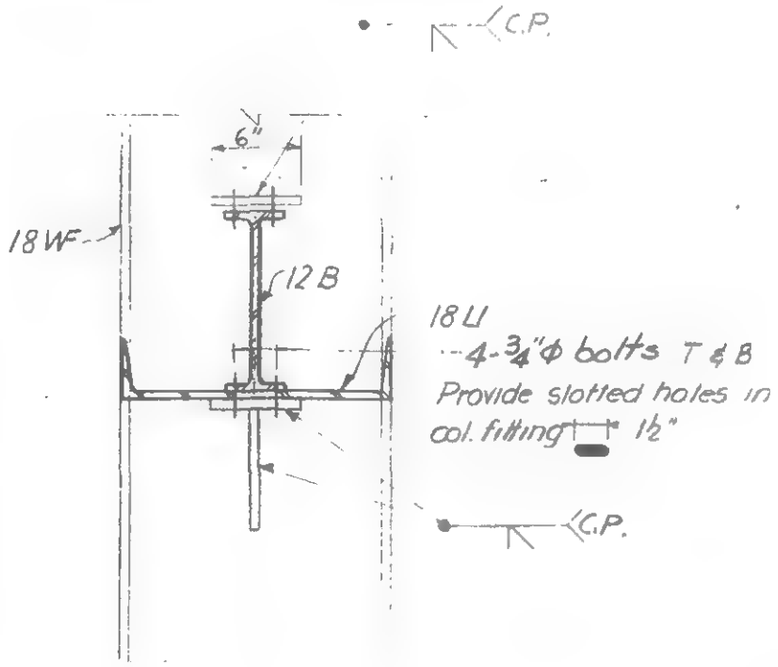

Section a-a

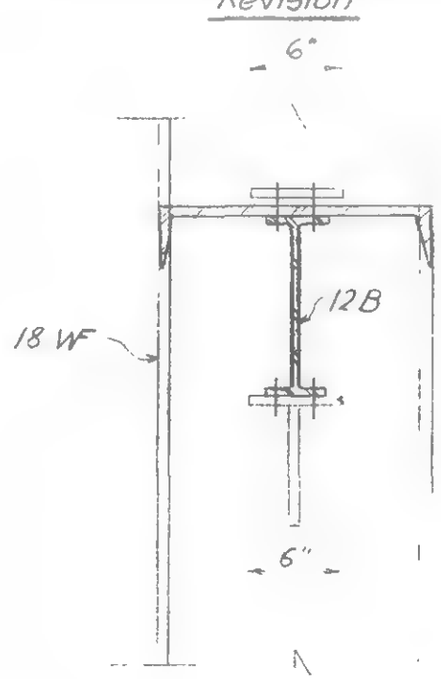

Section b-b

Ref. dwg: 16-AB4-23

LICENSED PROFESSIONAL ENGINEER
LESLIE E. ROBERTSON
No. 34360
UNIVERSITY OF THE STATE OF NEW YORK

19 - AB - 915

SKILLING, HELLE, CHRISTIANSEN, ROBERTSON — Structural & Civil Engineers

PROJECT: THE WORLD TRADE CENTER | TITLE: REVISION AFTER FABRICATION - DETAIL 916 | DATE: 12-30-68

REVISIONS

1-3-69

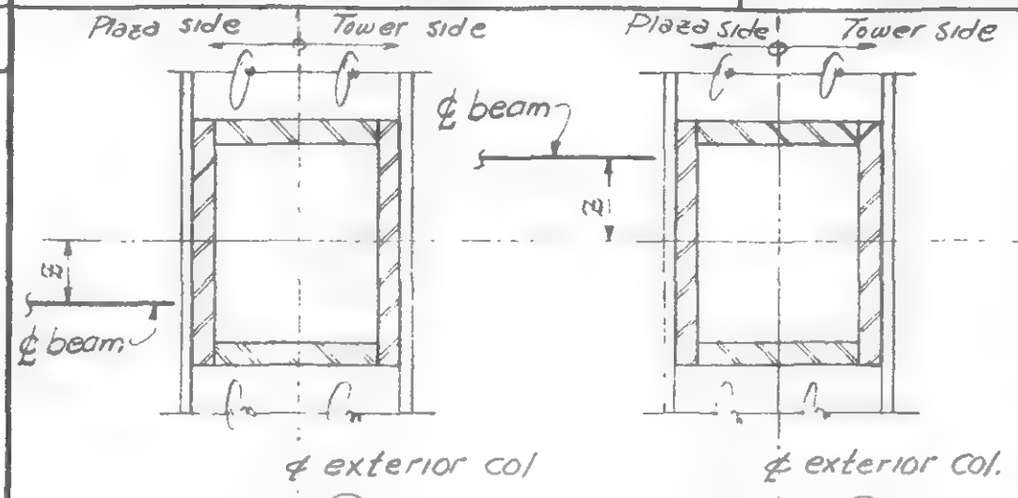

PLAN: PLAZA BEAM SEAT LOCATIONS

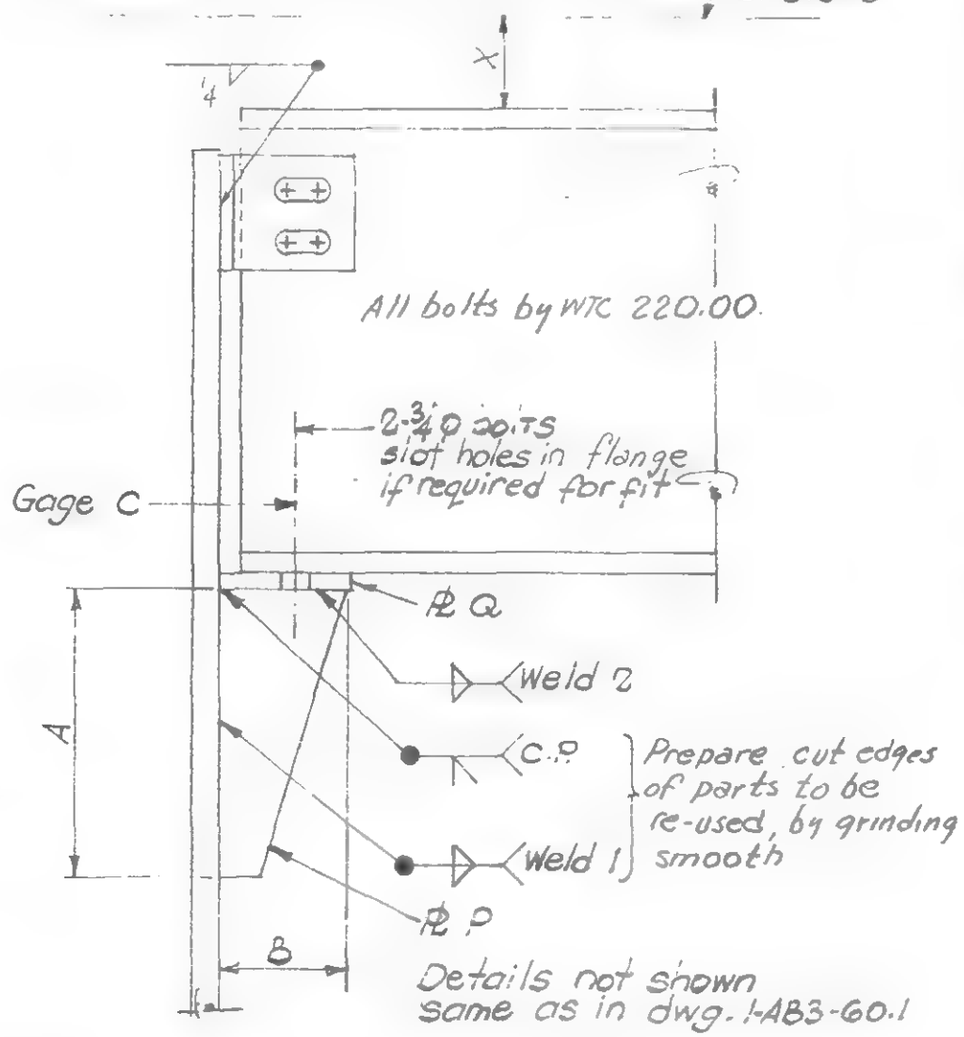

TYPICAL PLAZA BEAM SEAT DETAILS

COLUMN LOCATION							
		224B	301B	312B	315B	351B	354B
Action Required		Note 1	Note 2	Note 2	Note 2	Note 1	Note 3
Previous Detail		P.I.N	P10B	P.I.N	—	None	None
New Seat Location	Type	①	②	①	②	on ℄	on ℄
	Z	0'-6"	0'-6"	2'-6"	1'-3"	0"	0"
Seat Design Data		—	Note 4	Note 4	Note 4	Note 5	Note 4
Plates	P	3/4"				1/2	
	Q	3/4"				1/2	
Dimensions	A	1'-2"				1'-3"	
	B	6"				6"	
	X	11"				11"	
	C	5 1/2"				3 1/2"	
Welds	1	3/8"				5/16	
	2	3/8"				5/16	
Beam Size		16WF58				16WF36	
Ref. Dwg: 1-AB3-60.1, -60.5							

NOTES:

1. Provide new beam seat
2. Remove beam seat & web clip from loc. previously shown and install removed parts at new location shown.
3. Remove seat & clip previously scheduled for column 224B and install removed parts at col 354B
4. Seat details are the same as previously scheduled for this column. See reference dwg.
5. Seat detail is the same as previously scheduled under P.I.N.
6. Dress spandrel face after cutting off bm seats & web clips, by filling gouges with weld metal &/or grinding burrs smooth.
7. New bm seats & clips may be installed in lieu of re-using exist'g parts @ Contr's option.

19-B-916

LICENSED PROFESSIONAL ENGINEER — LESLIE E. ROBERTSON — No. 34360 — UNIVERSITY OF THE STATE OF NEW YORK

DESIGNED

DRAWN S.T.M.

REVIEWED

SKILLING - HELLE - CHRISTIANSEN - ROBERTSON Structural & Civil Engineers

PROJECT THE WORLD TRADE CENTER | TITLE REVISION AFTER FABRICATION - DETAIL 918 | DATE 1-15-69

REVISIONS

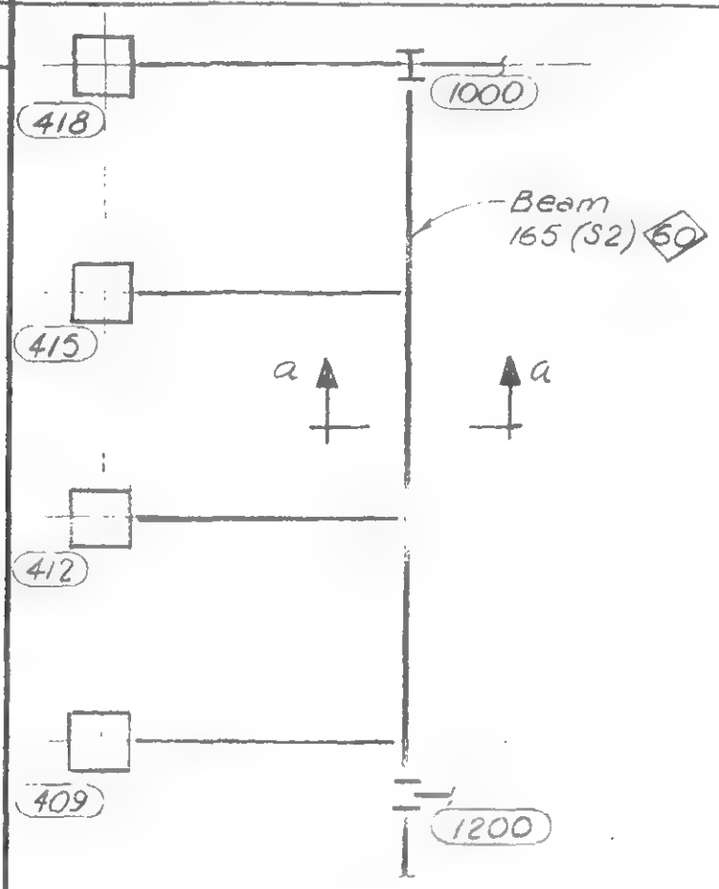

PLAN - ELEV. 274 - TOWER A

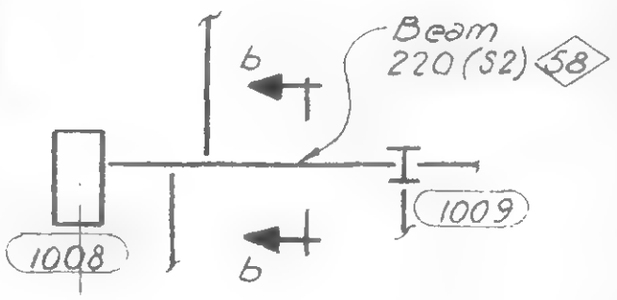

PLAN - ELEV. 274 TOWER A

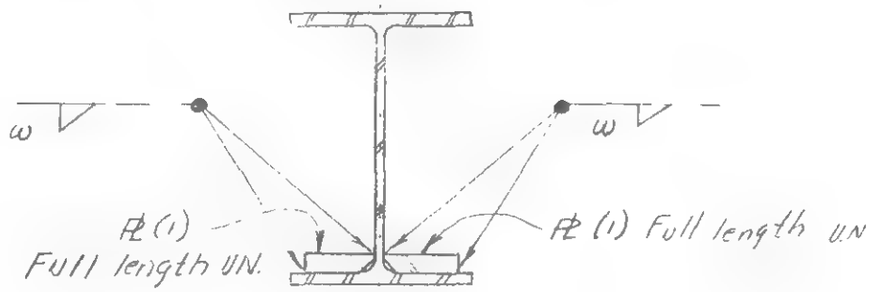

TYPICAL SECTION

Added Beam Studs $\frac{3}{4}$"ϕ x 3" U.N.		
Beam	Nº Studs per Row	Spac'g of Rows
124(S2) 62	2	6" o.c.
149(S2) 70	2	6" o.c.
221(S2) 58	2	6" o.c.
222(S2) 70	2	6" o.c.
223(S2) 70	2	6" o.c.
224(S2) 70	2	6" o.c.
225(S2) 70	2	6" o.c.
226(S2) 70	2	6" o.c.

Studs shall be installed for the full length of beam, unless otherwise noted.

Detail	Beam Section	℄ (1)	Weld Size "w"	Notes
Sec aa	12 WF 79	5" x $\frac{3}{4}$" (Fy: 50)	$\frac{1}{4}$"	Stagger welds 4" welds @ 8" o.c.
Sec bb	12 WF 27	$2\frac{3}{4}$" x $\frac{1}{2}$" (Fy: 36)	$\frac{1}{4}$"	Stagger welds 4" welds @ 8" o.c.

LICENSED PROFESSIONAL ENGINEER LESLIE E. ROBERTSON No. 34360 STATE OF NEW YORK

19 - A - 918

SKILLING, HELLE, CHRISTIANSEN, ROBERTSON — Structural & Civil Engineers

PROJECT: THE WORLD TRADE CENTER

TITLE: REVISIONS TO STRUCTURAL STEEL DETAIL 919

DATE: 1-17-69

REVISIONS

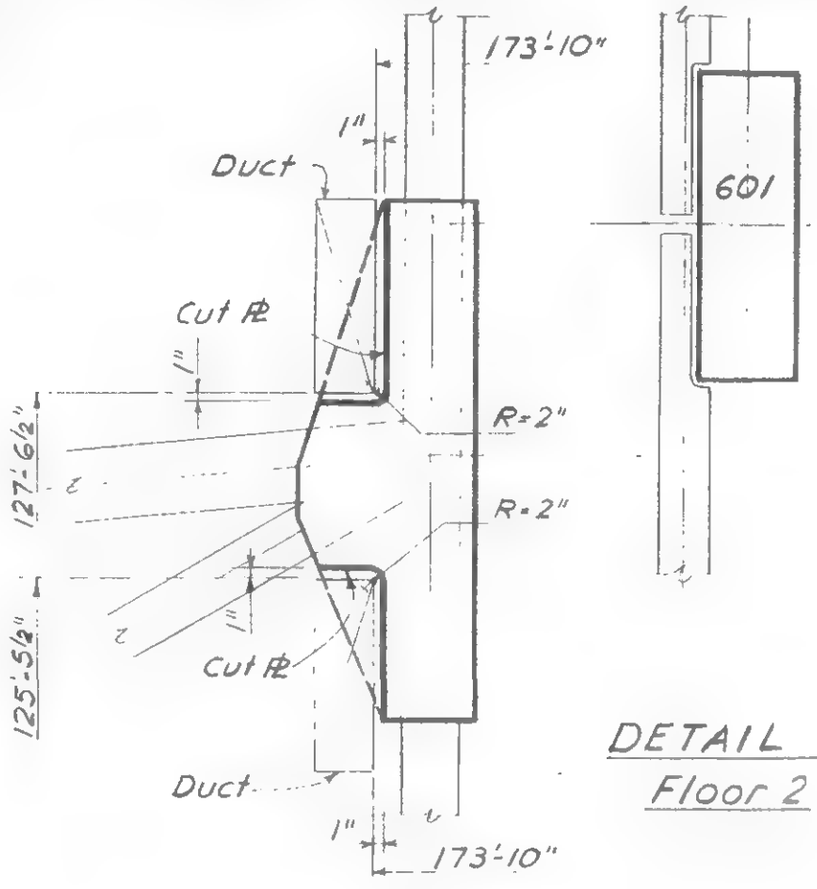

DETAIL 61
Floor 2

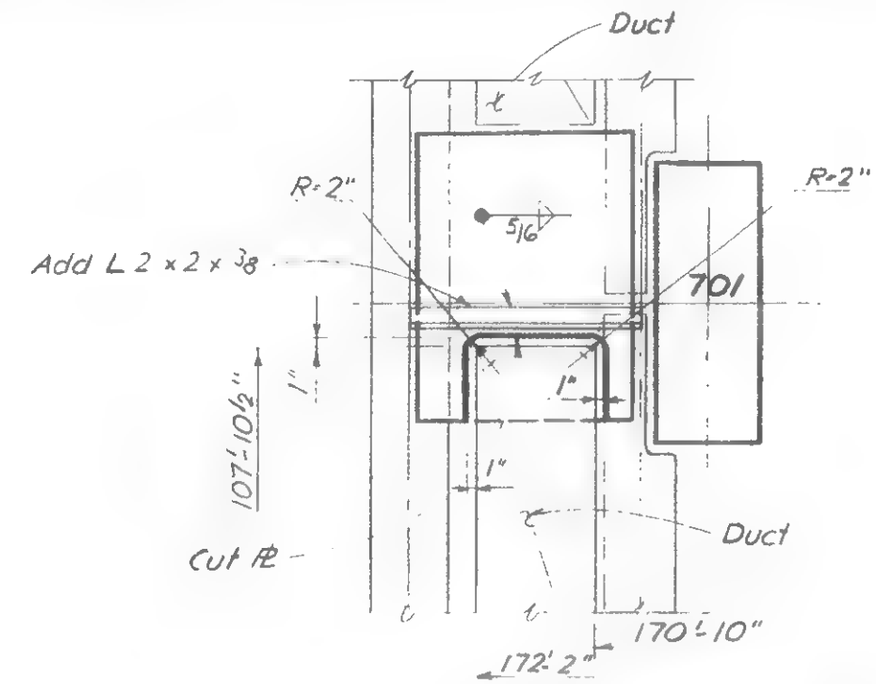

DETAIL 62 - Floor 2

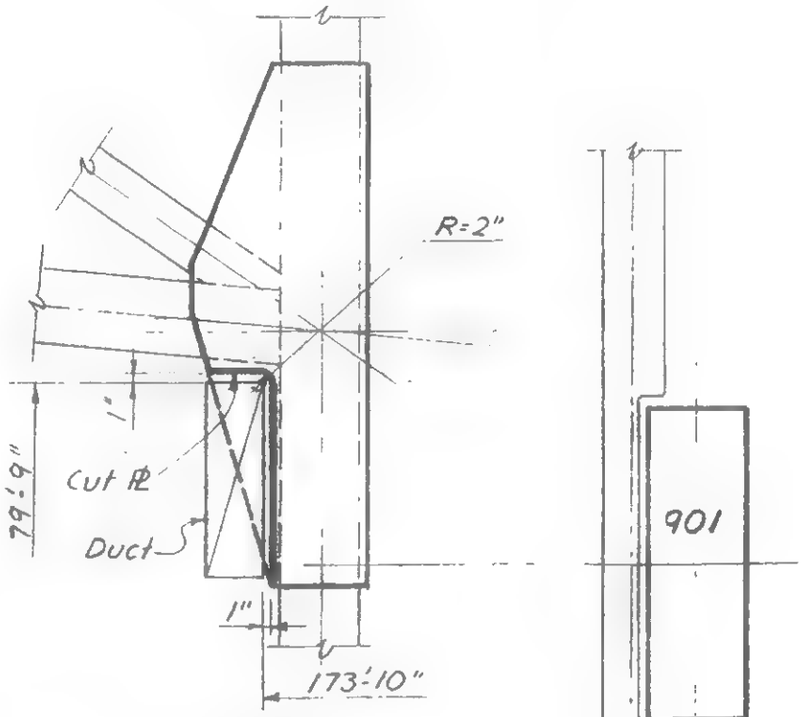

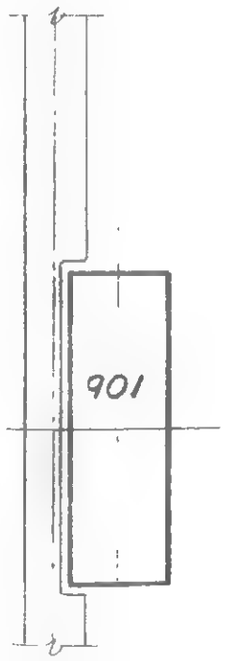

DETAIL 63
Floor 2

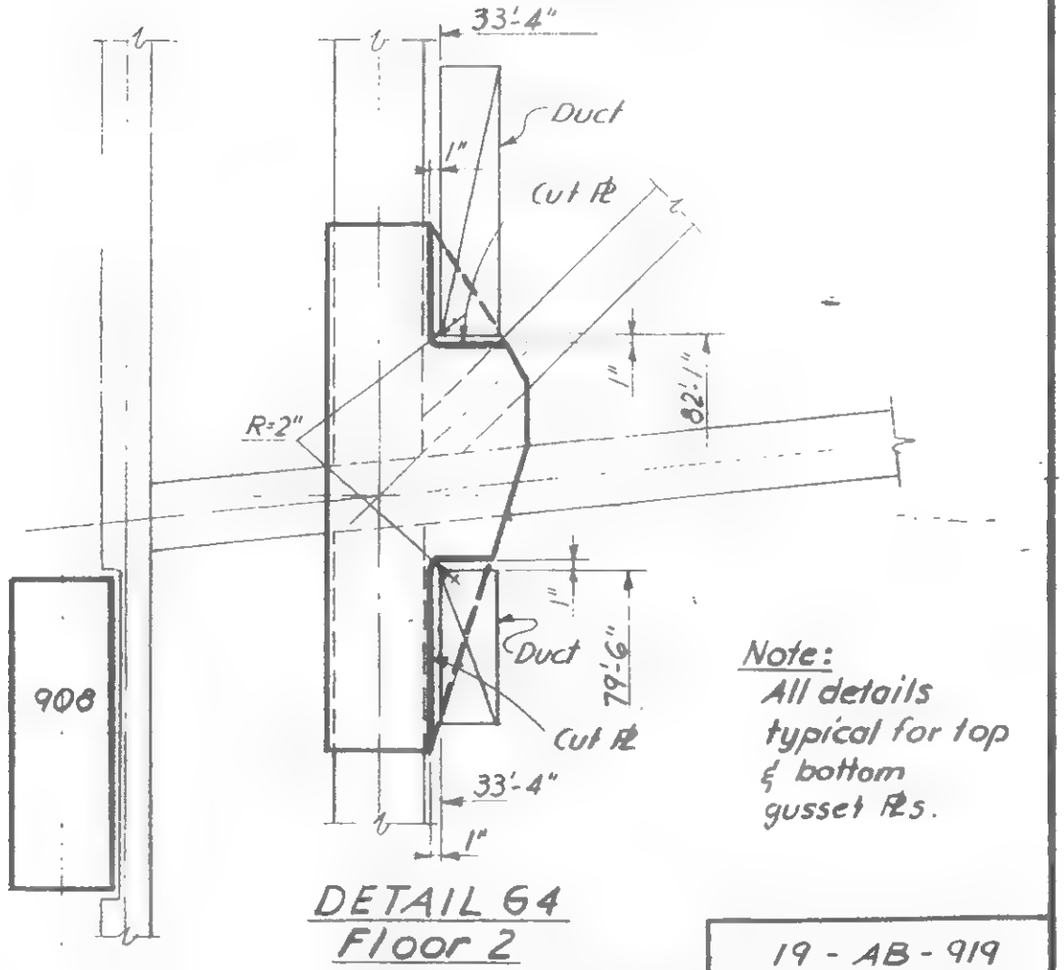

DETAIL 64
Floor 2

Note:
All details typical for top & bottom gusset Rs.

LICENSED PROFESSIONAL ENGINEER
LESLIE E. ROBERTSON
No. 34360
UNIVERSITY OF THE STATE OF NEW YORK

DESIGNED

DRAWN

REVIEWED

19 - AB - 919

SKILLING, HELLE, CHRISTIANSEN, ROBERTSON — Structural & Civil Engineers

PROJECT: THE WORLD TRADE CENTER | TITLE: REVISIONS TO STRUCTURAL STEEL DETAIL 920 | DATE: 1-17-69

REVISIONS

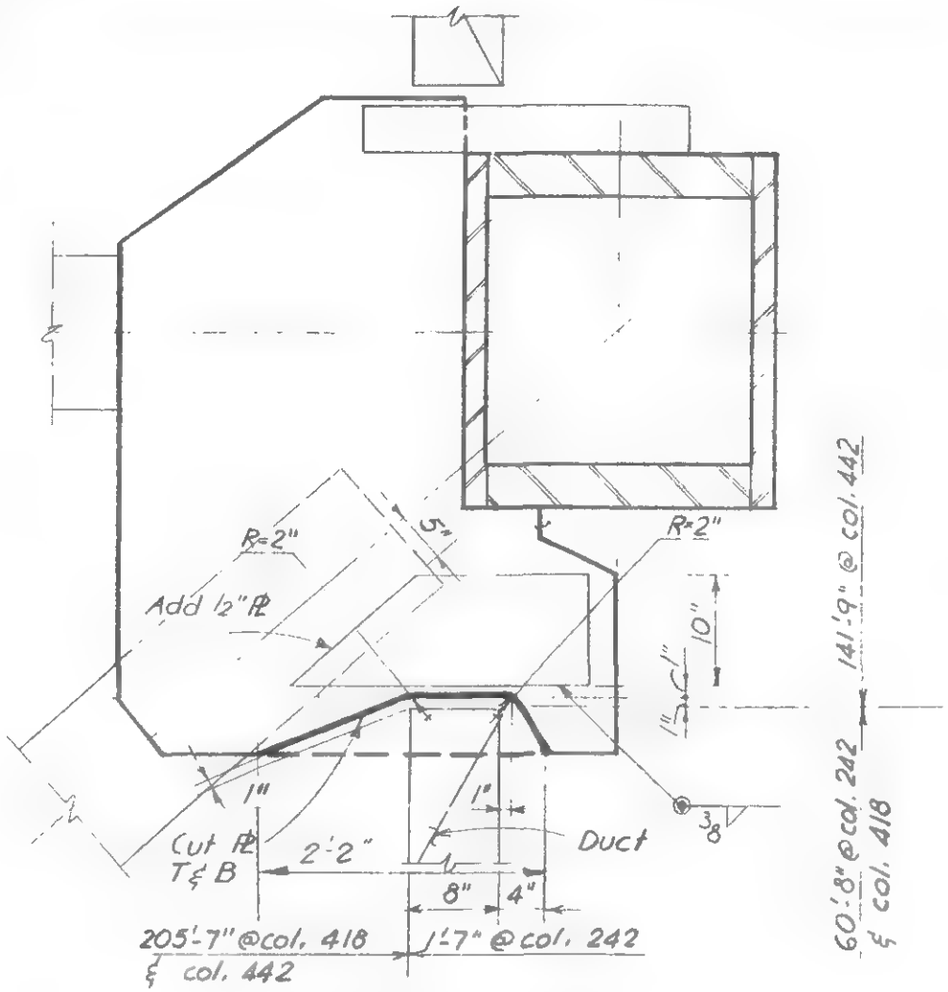

Details are typical for top & bottom gusset PLs.

DETAIL 65 - Exterior cols. 242 & 442
DETAIL 65A (Opp. hand) - Exterior column 418

Floor 2

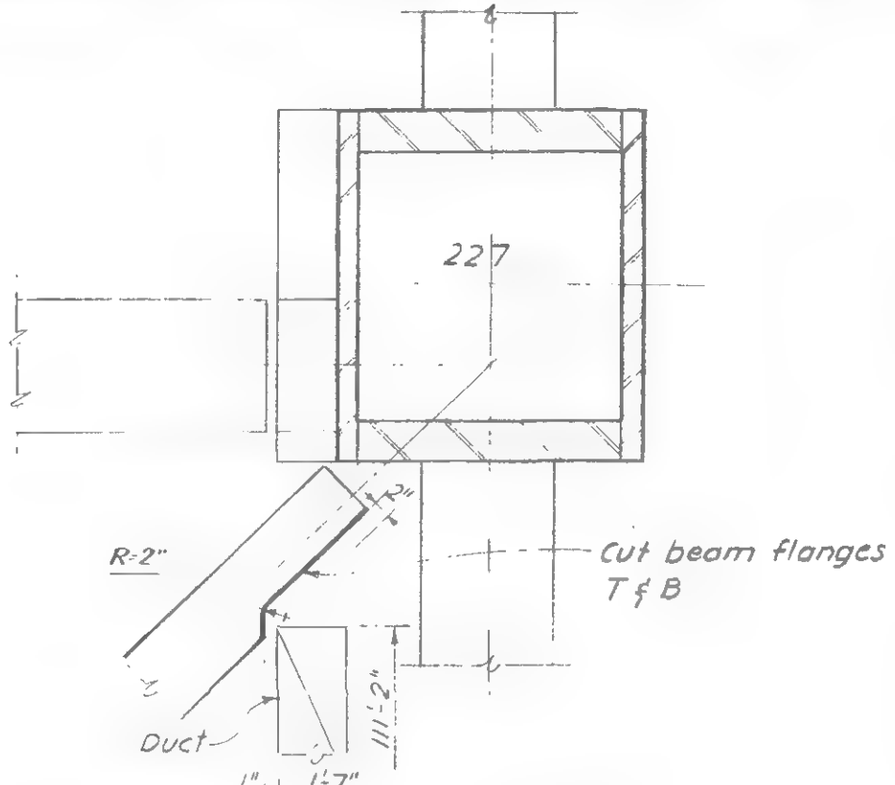

DETAIL 66
Floor 2

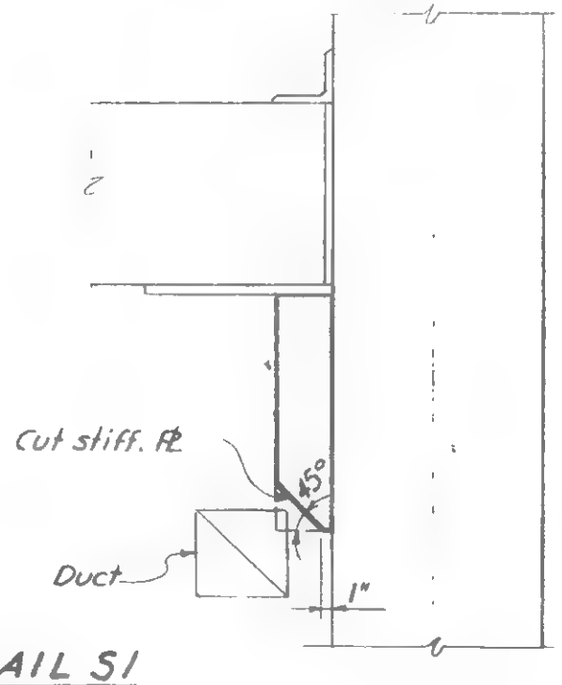

DETAIL 51
Floor 2

Elevation

At exterior cols. 109, 151, 304 & 351

LICENSED PROFESSIONAL ENGINEER — LESLIE E. ROBERTSON — No. 34360 — UNIVERSITY OF THE STATE OF NEW YORK

DESIGNED

DRAWN

REVIEWED

19-AB-920

SKILLING, HELLE, CHRISTIANSEN, ROBERTSON — Structural & Civil Engineers

PROJECT: THE WORLD TRADE CENTER

TITLE: REVISION AFTER FABRICATION - DETAIL 921

DATE: 1-27-69

REVISIONS

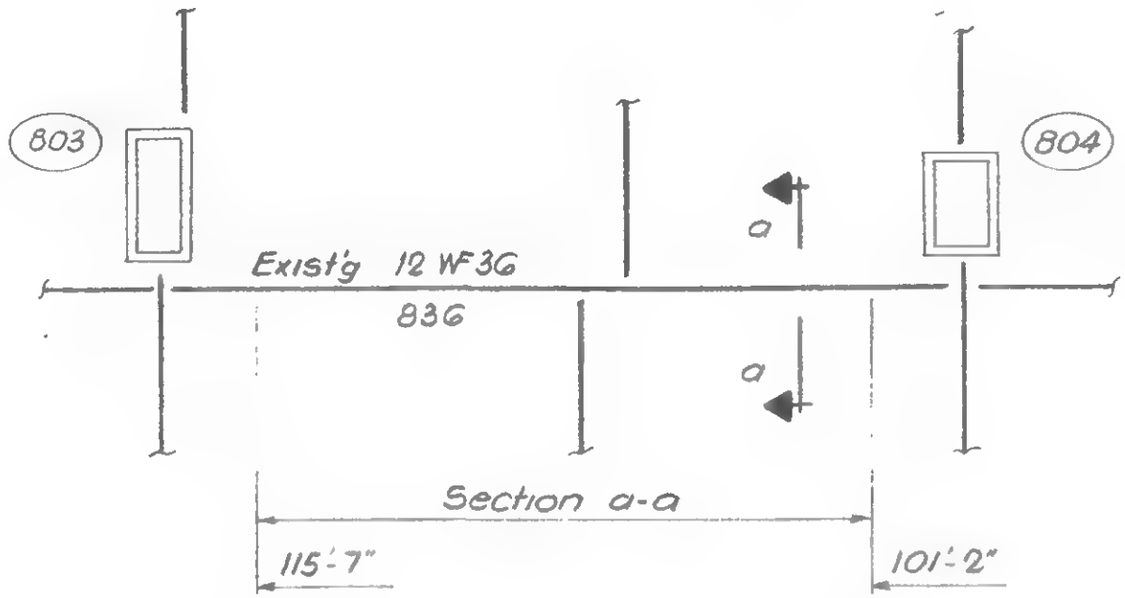

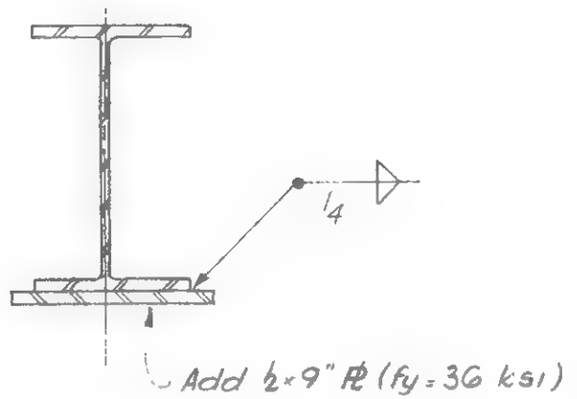

Part Plan - Elev. 284'-0"
Tower A

Section a-a

LICENSED PROFESSIONAL ENGINEER
LESLIE E. ROBERTSON
No. 34360
UNIVERSITY OF THE STATE OF NEW YORK

DESIGNED W Bowssuto

DRAWN G.T. HELLEBRANTH

REVIEWED W. Brewer

19-A-921

SKILLING, HELLE, CHRISTIANSEN, ROBERTSON — Structural & Civil Engineers

PROJECT: THE WORLD TRADE CENTER | TITLE: REVISION AFTER FABRICATION - DETAIL 922 | DATE: 3-19-69

REVISIONS

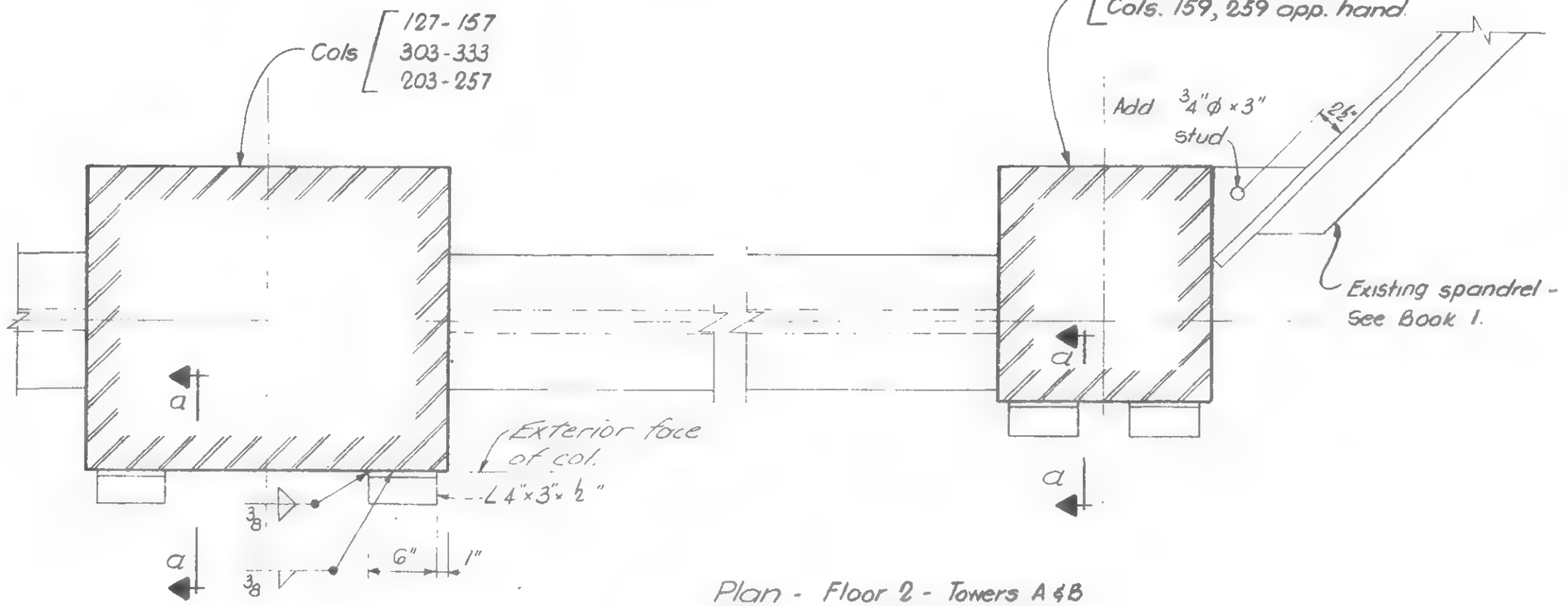

Plan - Floor 2 - Towers A & B

Add two L's per column. Details shown are typical for all added L's.

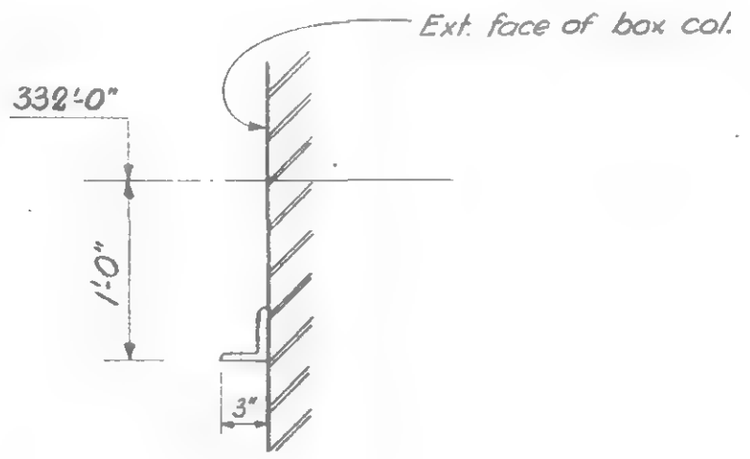

Section a-a

LICENSED PROFESSIONAL ENGINEER — LESLIE E. ROBERTSON — No. 34360 — UNIVERSITY OF THE STATE OF NEW YORK

A-LA
DRAWN
G. T. Hellebranth.
REVIEWED

19-AB-922

SKILLING, HELLE, CHRISTIANSEN, ROBERTSON — Structural & Civil Engineers

PROJECT: THE WORLD TRADE CENTER

TITLE: REVISION AFTER FABRICATION - DETAIL 923

DATE: 3-19-69

REVISIONS

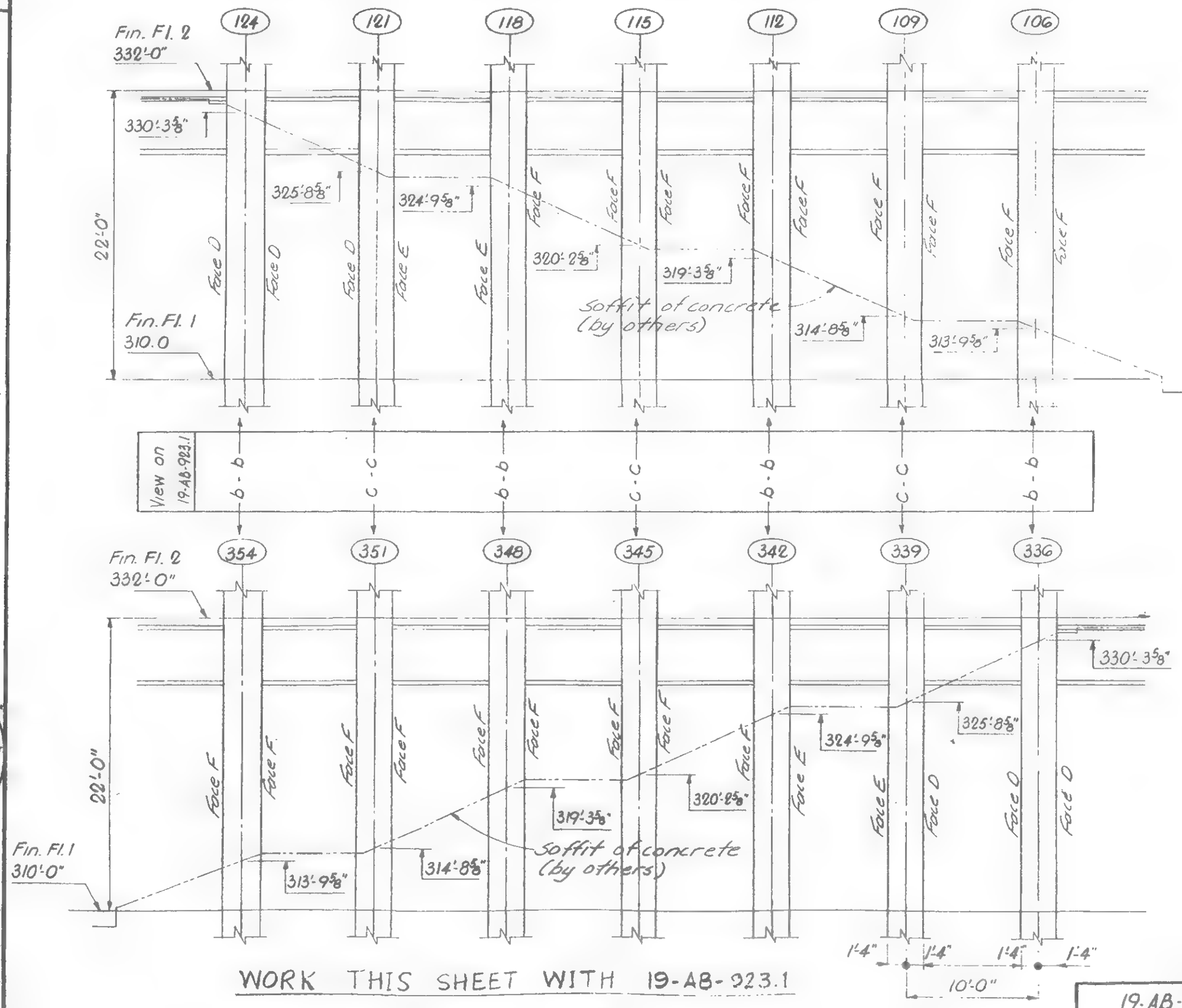

WORK THIS SHEET WITH 19-AB-923.1

LICENSED PROFESSIONAL ENGINEER
LESLIE E. ROBERTSON
No. 34360
UNIVERSITY OF THE STATE OF NEW YORK

DESIGNED
A.L.A.
DRAWN
G.T. Hellebranth
REVIEWED

19-AB-923

SKILLING, HELLE, CHRISTIANSEN, ROBERTSON — Structural & Civil Engineers

PROJECT THE WORLD TRADE CENTER | TITLE REVISION AFTER FABRICATION - DETAIL 923 | DATE 3-19-69

REVISIONS

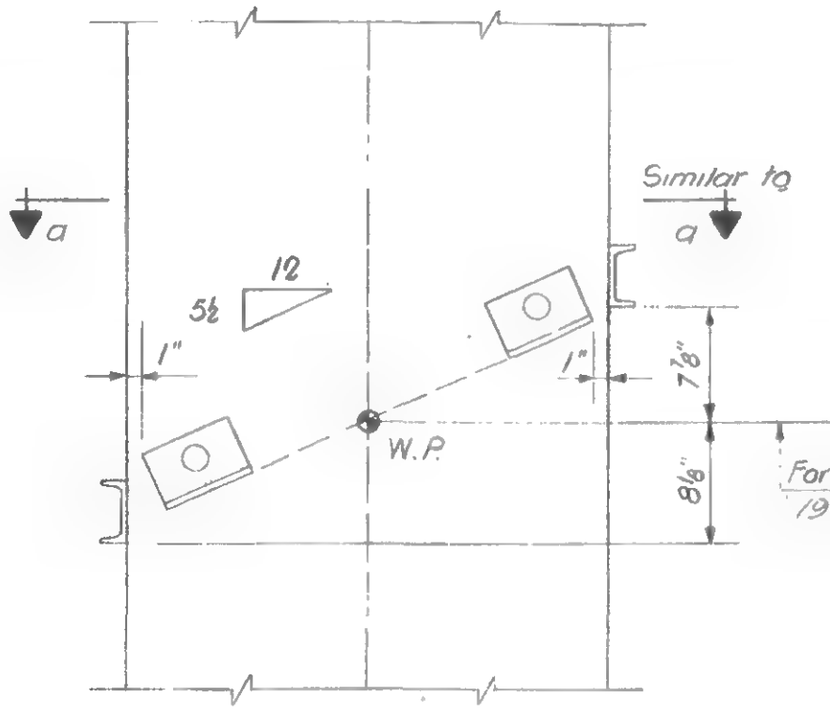

View b-b
(at top of stair run by others)

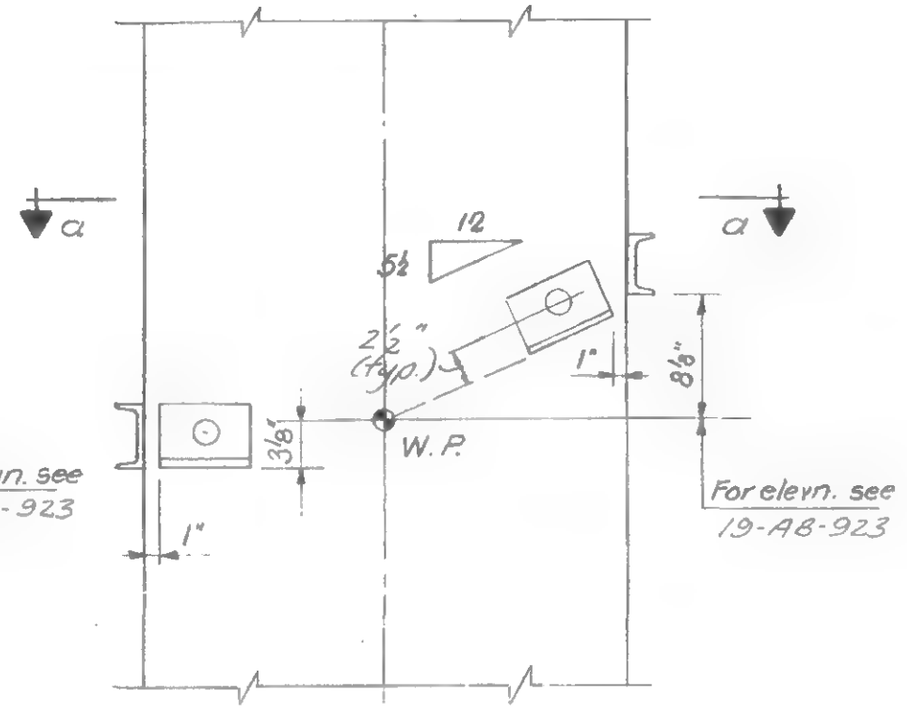

View c-c
(at bottom of stair run by others)

Notes:
1. For columns where views b-b or c-c apply see 19-AB-923
2. Use views b-b and c-c as shown for cols 336-354, opp. hand for cols 106-124.
3. For location of faces D, E, F see 19-AB-923

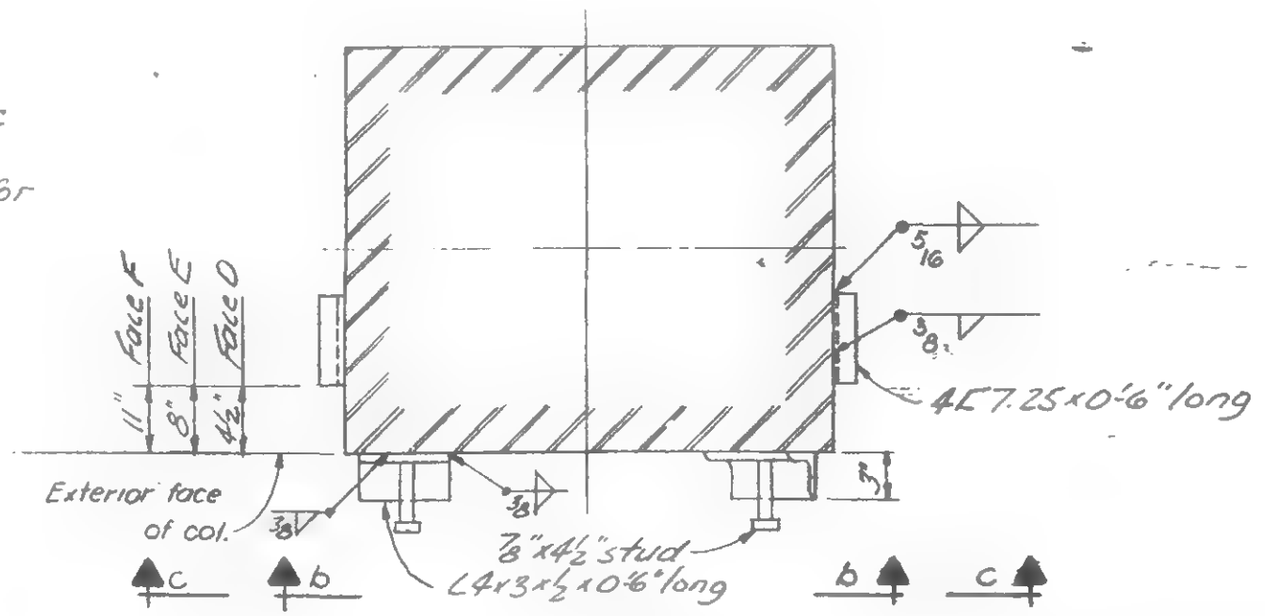

Plan a-a

LICENSED PROFESSIONAL ENGINEER
LESLIE E. ROBERTSON
No. 34360
UNIVERSITY OF THE STATE OF NEW YORK

A.L.A.
DRAWN
G.T. Hellebranth.

19-AB-923.1

SKILLING, HELLE, CHRISTIANSEN, ROBERTSON — Structural & Civil Engineers

PROJECT THE WORLD TRADE CENTER | TITLE REVISION AFTER FABRICATION - DETAIL 925 | DATE 3-13-69

REVISIONS

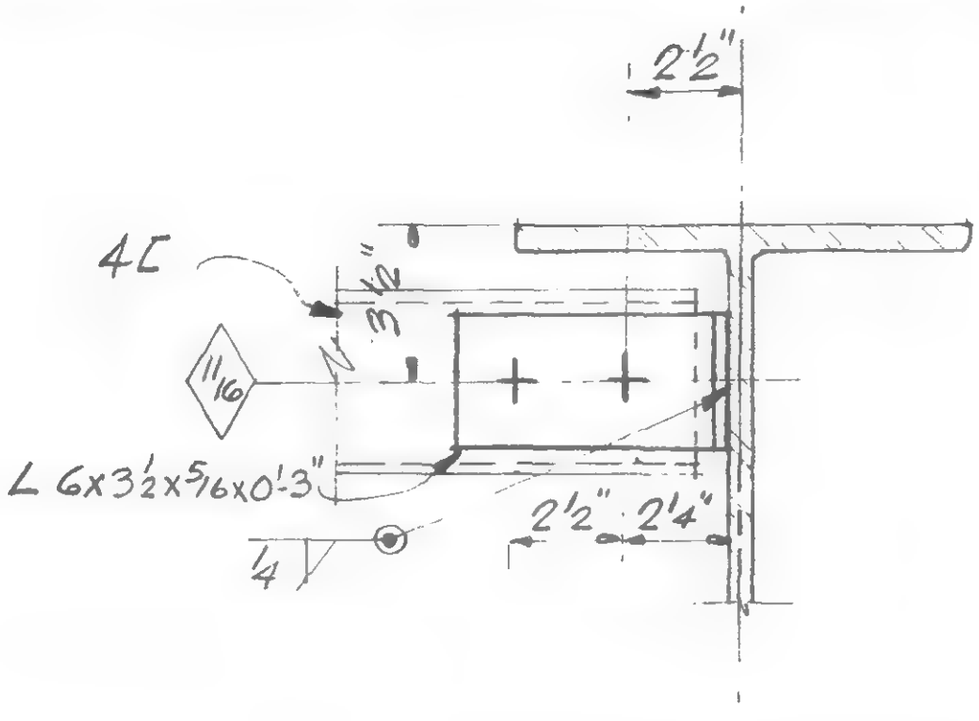

Clip Detail

2 existing 4C's relocated floor 7, Tower A, & 2 relocated floor 7, Tower B
Abandon existing clips & furnish and install 4 new clips each tower.
See clip detail above and see SA-15 & SB-15 for location.

LICENSED PROFESSIONAL ENGINEER
LESLIE E. ROBERTSON
No. 34360
UNIVERSITY OF THE STATE OF NEW YORK

DESIGNED

DRAWN

REVIEWED W. Brewer

19-AB-925

SKILLING, HELLE, CHRISTIANSEN, ROBERTSON — Structural & Civil Engineers

PROJECT – THE WORLD TRADE CENTER | TITLE REVISION AFTER FABRICATION - DETAIL 926 | DATE 3-14-69

REVISIONS

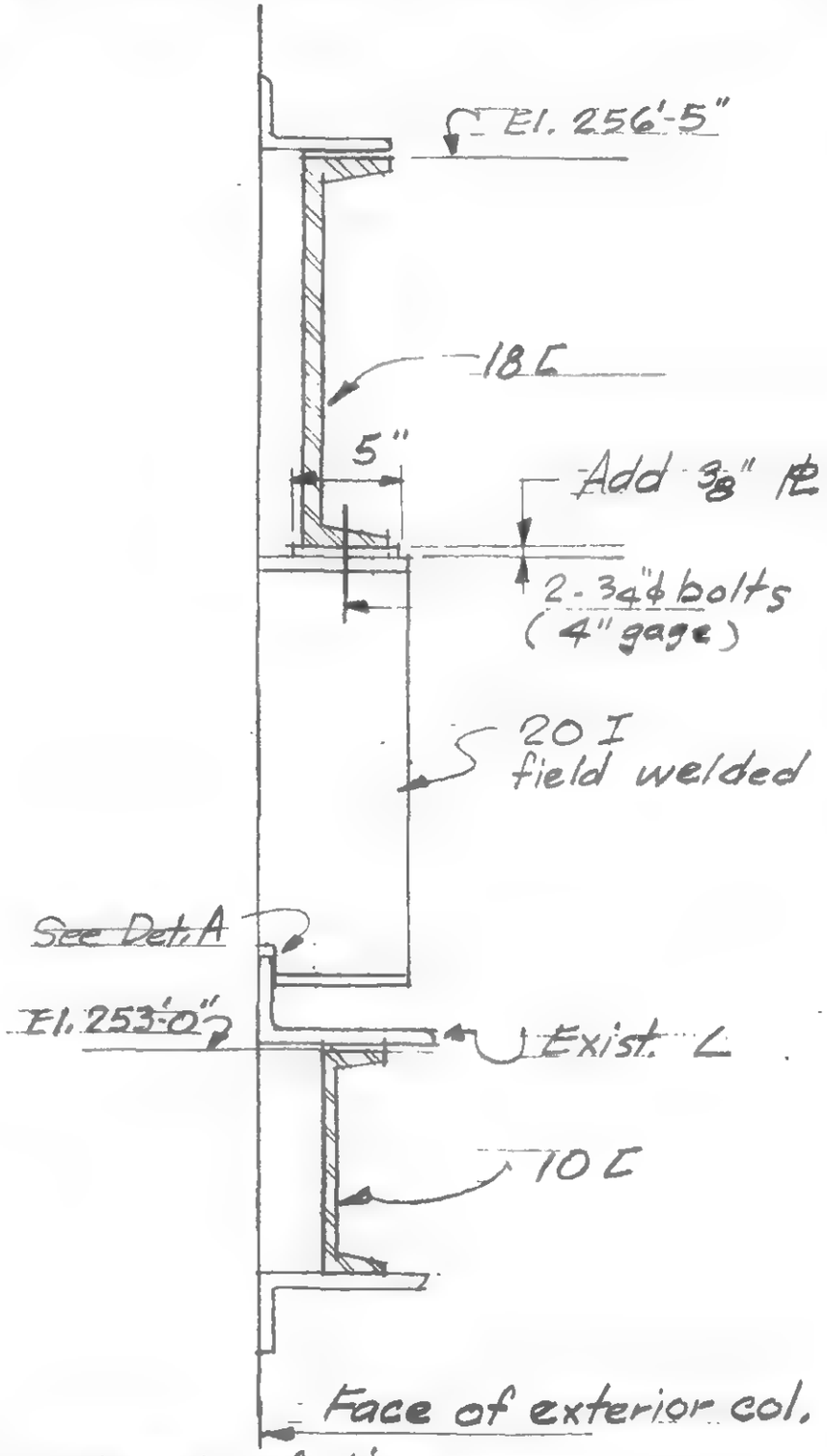

SECTION AT SOUTH WALL TOWER A

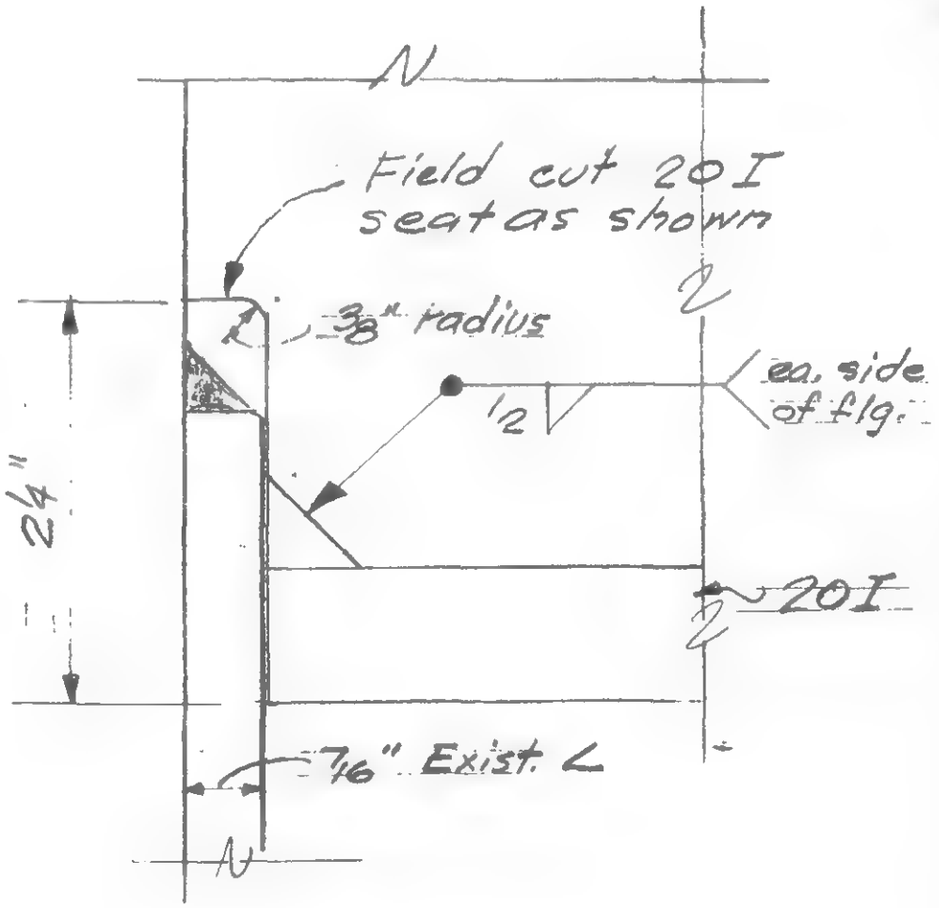

DETAIL A

Note: See SA-3 for location.
See WTC 220.00 field weld details dwg. FW-36 for details not shown.

LICENSED PROFESSIONAL ENGINEER
LESLIE E. ROBERTSON
No. 34360
UNIVERSITY OF THE STATE OF NEW YORK

DESIGNED H. ROET
DRAWN
REVIEWED W. Brewer

19-A-926

SKILLING, HELLE, CHRISTIANSEN, ROBERTSON — Structural & Civil Engineers

PROJECT: THE WORLD TRADE CENTER | TITLE: REVISION AFTER FABRICATION -DETAIL 927 | DATE: 3-21-69

REVISIONS

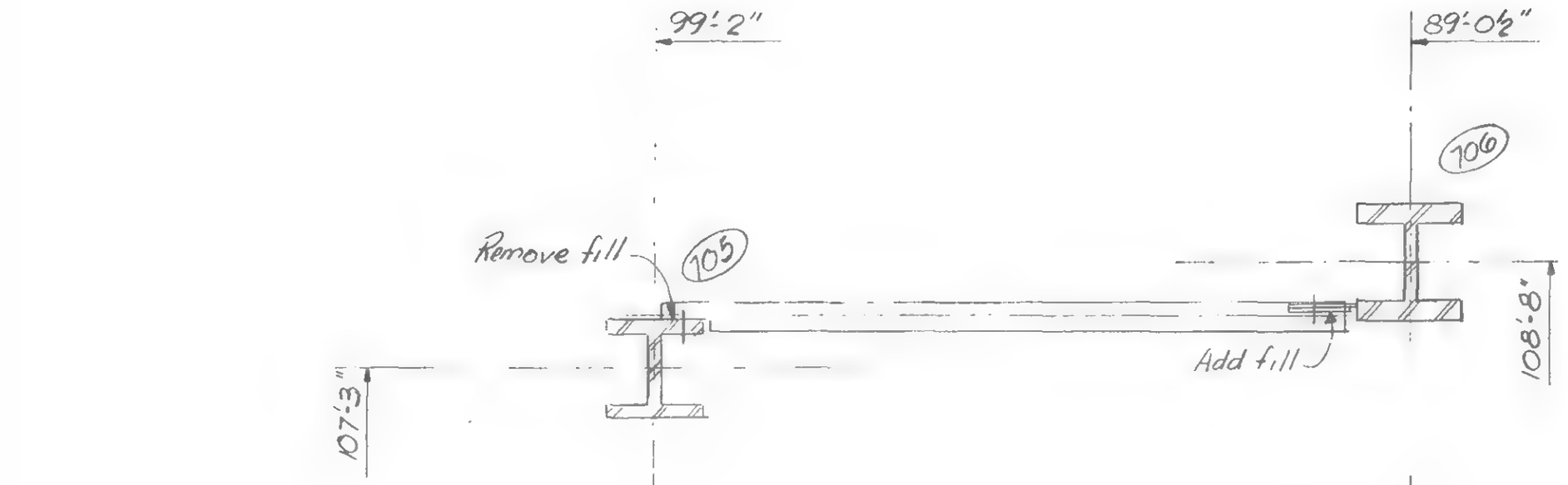

Remove 9/16" fill PL from flange of column and bolt beam directly to flange

Add 9/16 fill PL to splice PL prior to bolting beam

Floor 42

LICENSED PROFESSIONAL ENGINEER
LESLIE E. ROBERTSON
No. 34360
UNIVERSITY OF THE STATE OF NEW YORK

DESIGNED S. Kay
DRAWN S. Kay
REVIEWED

19-AB-927.

SKILLING, HELLE, CHRISTIANSEN, ROBERTSON — Structural & Civil Engineers

PROJECT: THE WORLD TRADE CENTER | TITLE: REVISION AFTER FABRICATION - DETAIL 928 | DATE: 5-9-69

REVISIONS

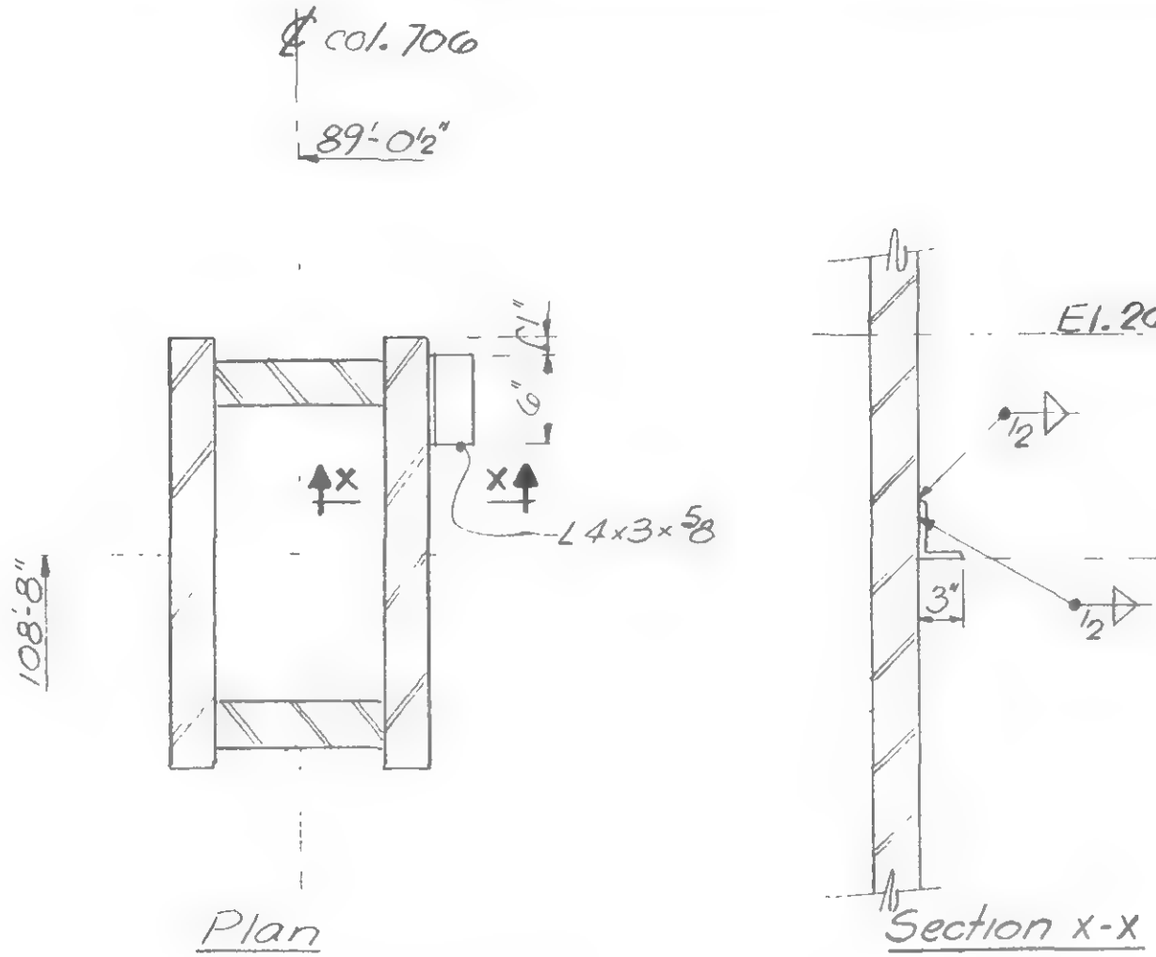

Tower B - Sub Level 3 - El. 264

LICENSED PROFESSIONAL ENGINEER
LESLIE E. ROBERTSON
No. 34360
UNIVERSITY OF THE STATE OF NEW YORK

DESIGNED A.L.A.
DRAWN S. Kay
REVIEWED

19-B-928

SKILLING, HELLE, CHRISTIANSEN, ROBERTSON — Structural & Civil Engineers

PROJECT THE WORLD TRADE CENTER | TITLE TOWER A, COLUMN 701, FLOOR 2 | DATE 6/13/69

REVISIONS

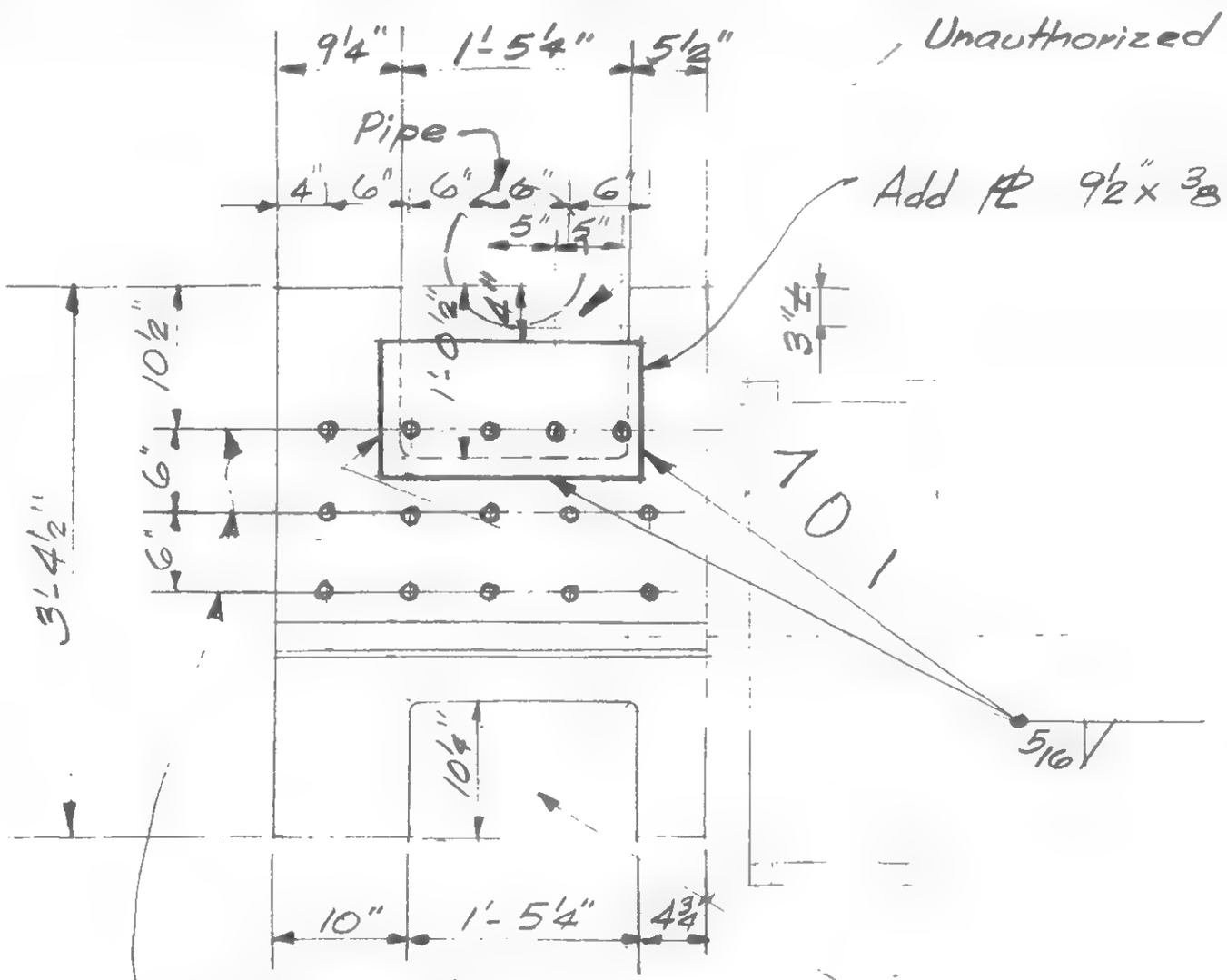

Unauthorized cut

Add ℄ 9½" × ⅜" × 1'-7"

Studs Detail 54A
18-AB2-54.1
Modify spacing as shown

Existing cut
19-AB-919

LICENSED PROFESSIONAL ENGINEER
LESLIE E. ROBERTSON
No. 34366
UNIVERSITY OF THE STATE OF NEW YORK

DESIGNED

DRAWN

REVIEWED W Brewer

19-A-929

SKILLING, HELLE, CHRISTIANSEN, ROBERTSON — Structural & Civil Engineers

PROJECT: THE WORLD TRADE CENTER | TITLE: REVISED TROLLEY BEAM SUPPORT | DATE: 6-6-69

REVISIONS

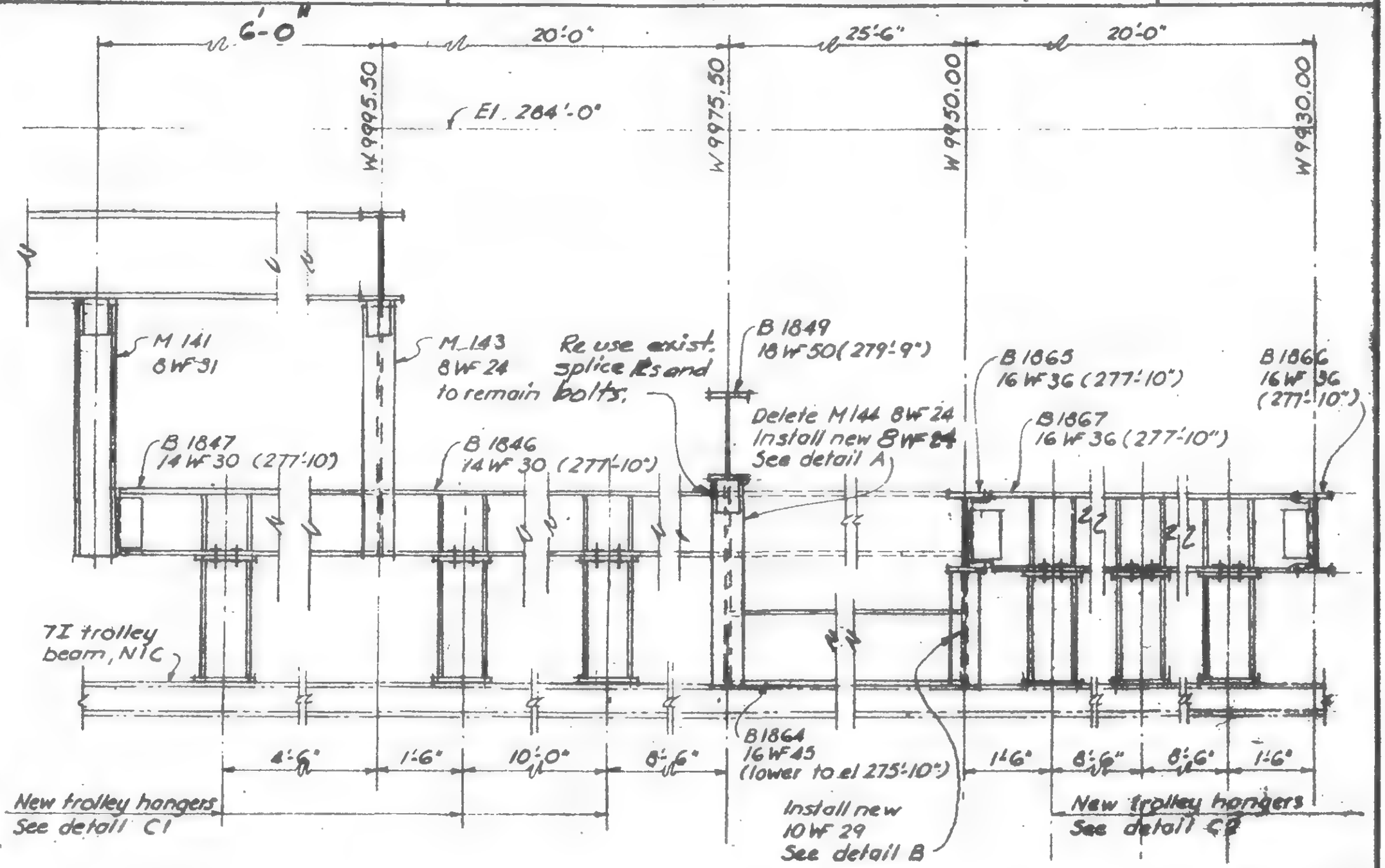

SECTION A-A

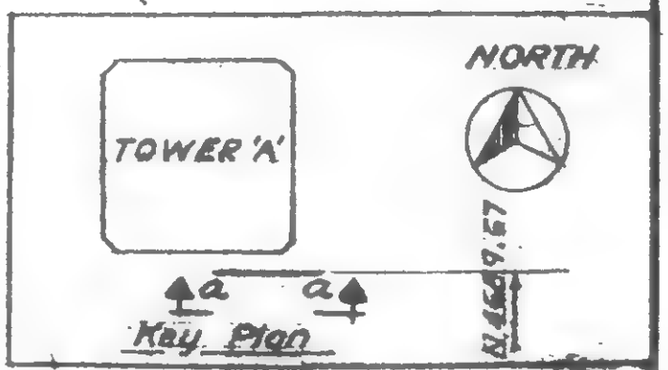

19-K-929-1

LESLIE E. ROBERTSON — LICENSED PROFESSIONAL ENGINEER — No. 34360 — CITY OF THE STATE OF NEW YORK

DRAWN

REVIEWED

SKILLING, HELLE, CHRISTIANSEN, ROBERTSON — Structural & Civil Engineers

PROJECT: THE WORLD TRADE CENTER | TITLE: REVISED TROLLEY BEAM SUPPORT - DETAILS | DATE: 6-6-69

REVISIONS

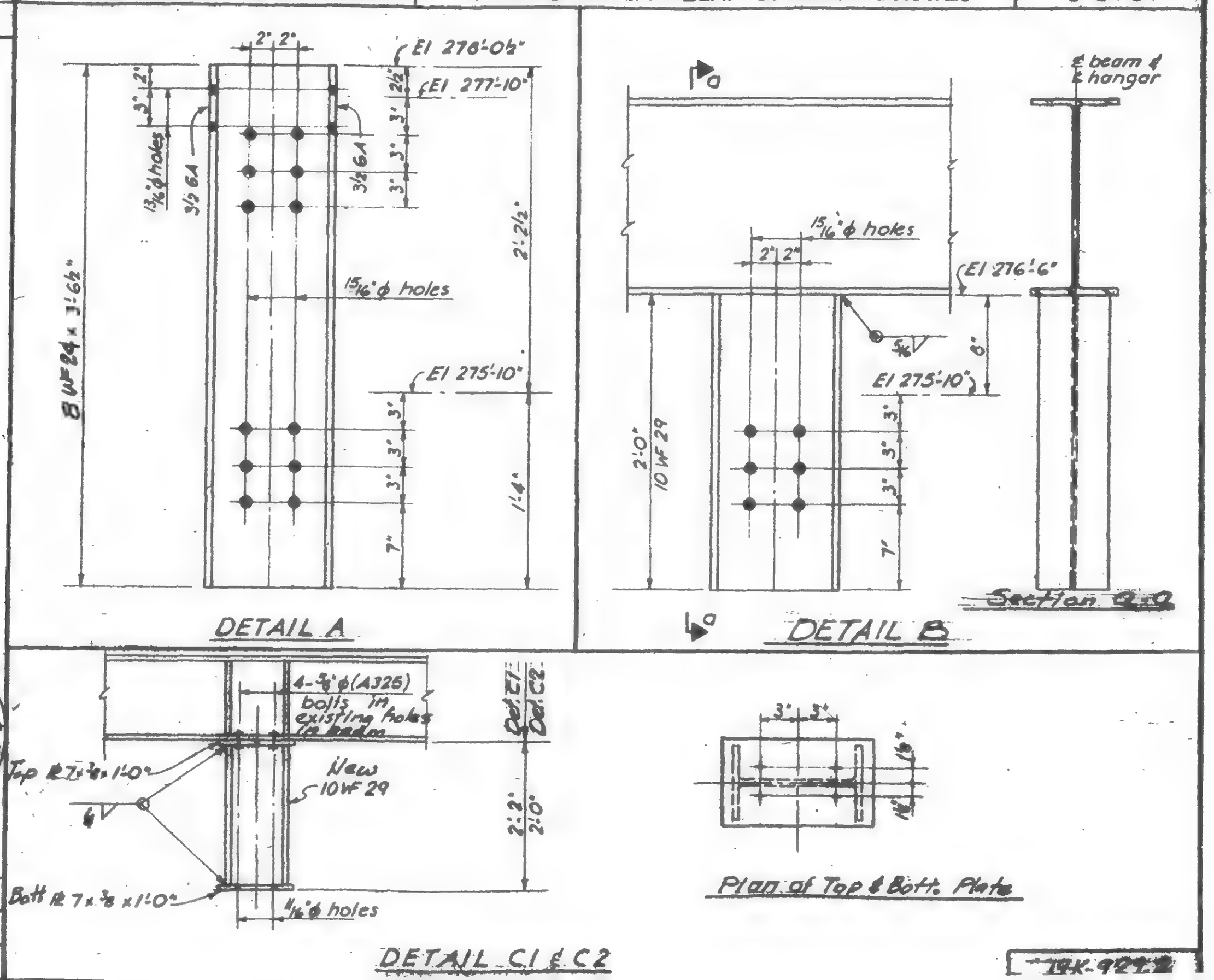

LICENSED PROFESSIONAL ENGINEER — LESLIE E. ROBERTSON — No. 34960 — STATE OF NEW YORK

DRAWN: E. Smith

REVISED

19K-929.2

SKILLING, HELLE, CHRISTIANSEN, ROBERTSON — Structural & Civil Engineers

PROJECT THE WORLD TRADE CENTER

TITLE REVISED DETAIL E53 AT COL. 2K, 24K, 4K, 44K

DATE 6-10-69

REVISIONS

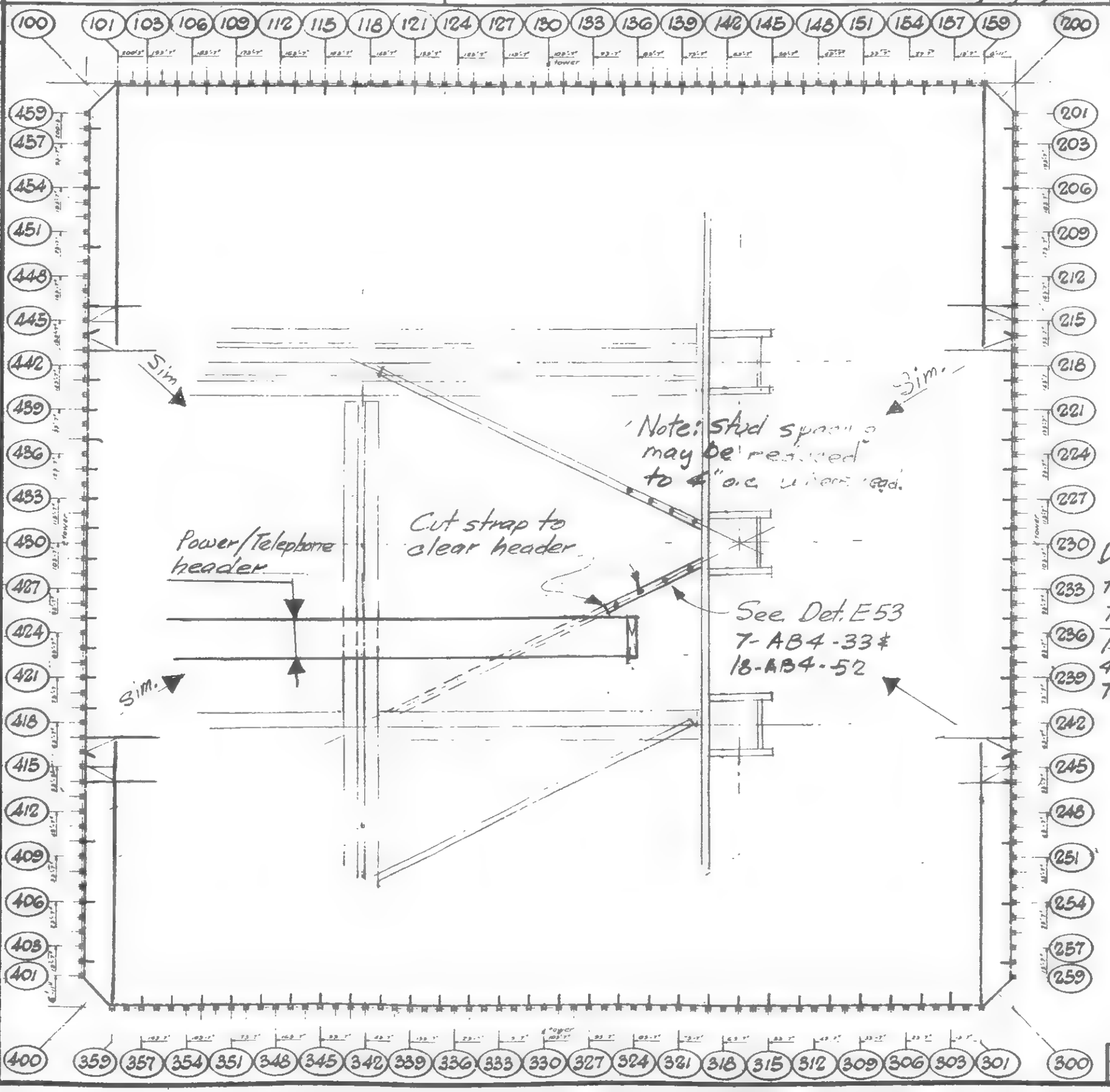

NORTH

TOWER A

NORTH

TOWER B

Detail applies to the following floors

Tower A	Tower B
10-40	12-40
44-74	44-74
78-106	78-106

DESIGNED

DRAWN

REVIEWED

19-AB-930

SKILLING, HELLE, CHRISTIANSEN, ROBERTSON — Structural & Civil Engineers

PROJECT: THE WORLD TRADE CENTER

TITLE: REVISION AFTER FABRICATION - DETAIL 931

DATE: 6/10/69

REVISIONS

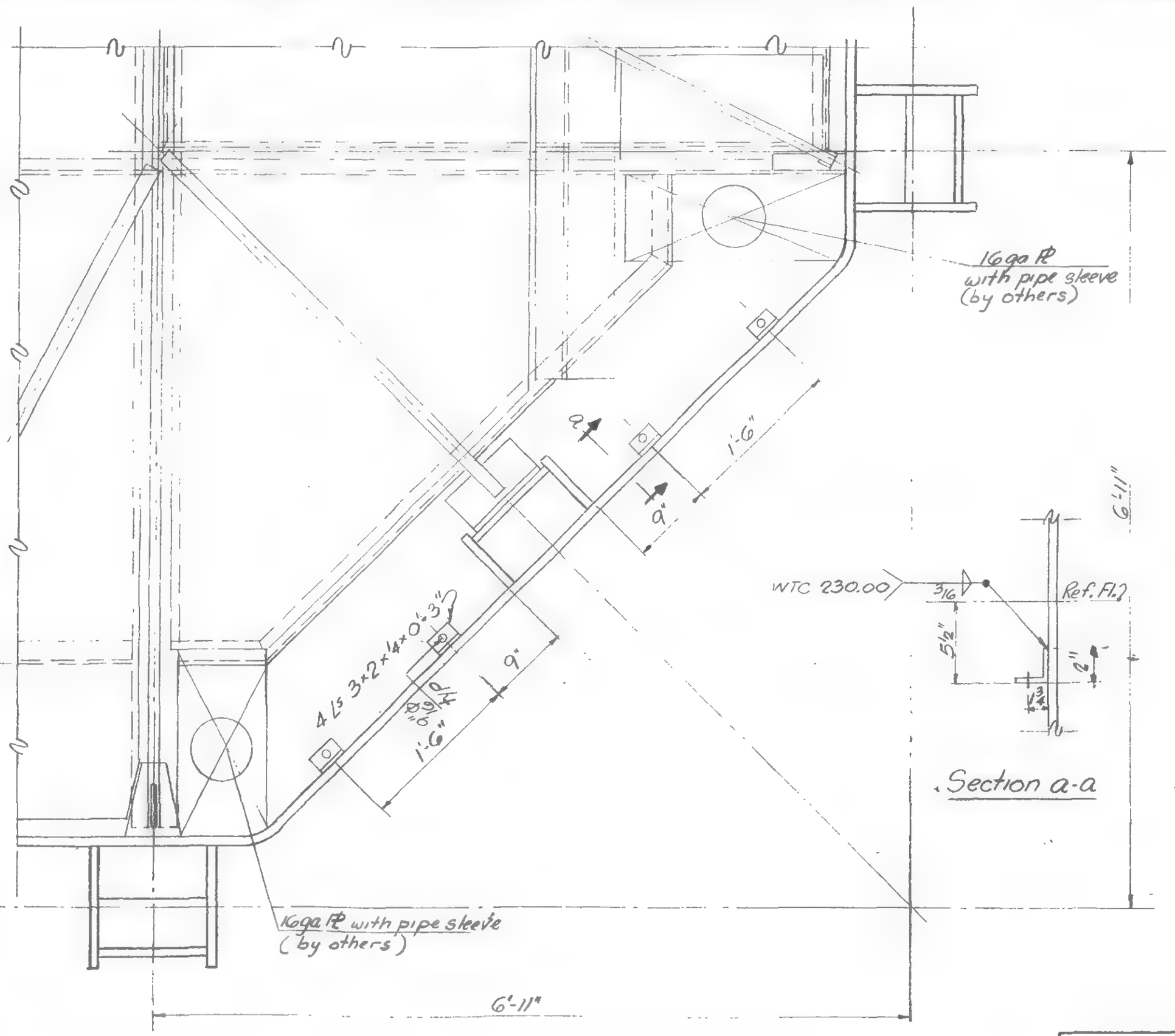

LICENSED PROFESSIONAL ENGINEER
LESLIE E. ROBERTSON
No. 34360
UNIVERSITY OF THE STATE OF NEW YORK

DRAWN

REVIEWED

19-AB-931

SKILLING, HELLE, CHRISTIANSEN, ROBERTSON — Structural & Civil Engineers

PROJECT: THE WORLD TRADE CENTER | TITLE: REVISED BEAM CONN. TO SLURRY WALL - DETAIL H | DATE: 6-20-69

REVISIONS

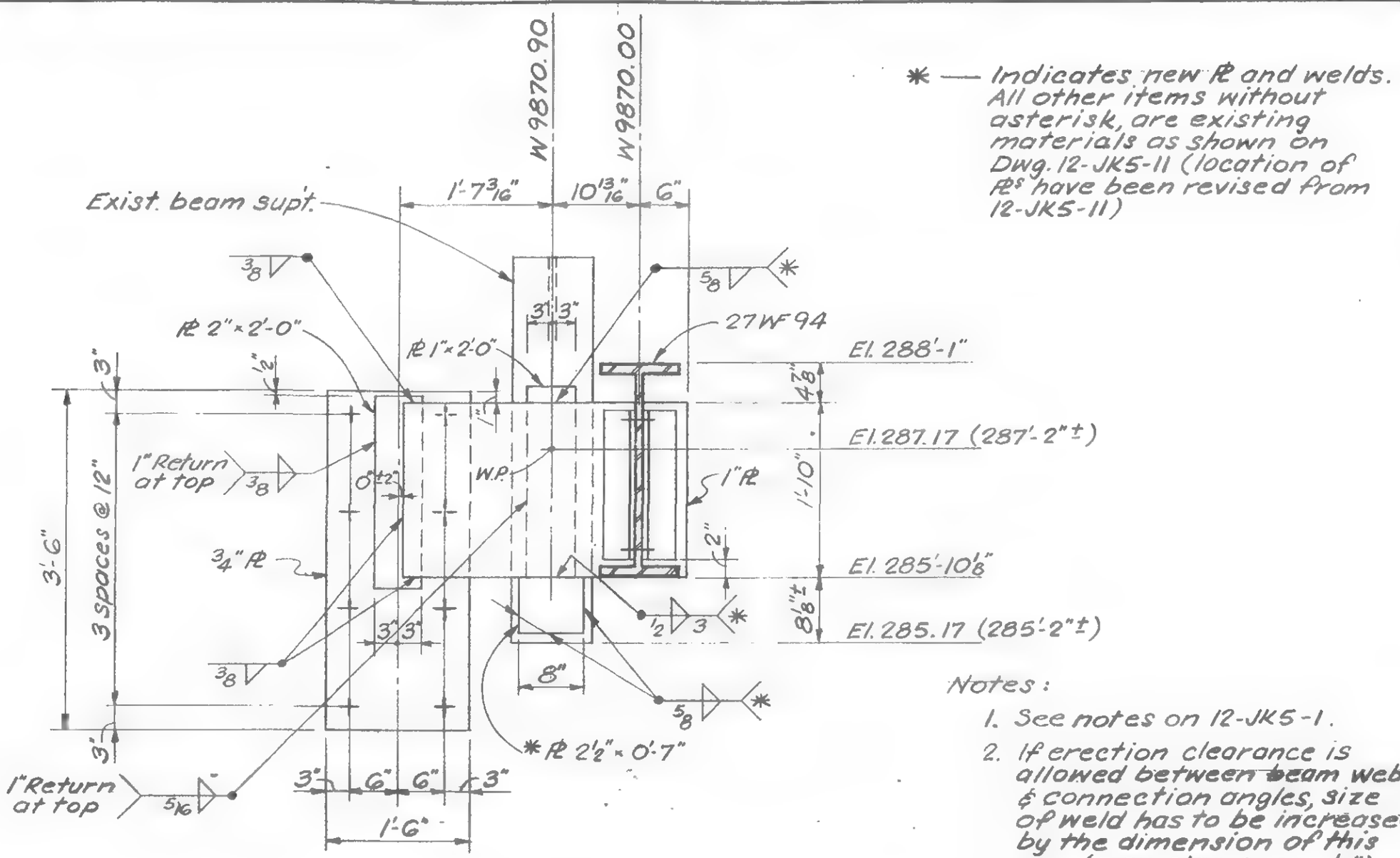

* — Indicates new PL and welds. All other items without asterisk, are existing materials as shown on Dwg. 12-JK5-11 (location of PLs have been revised from 12-JK5-11)

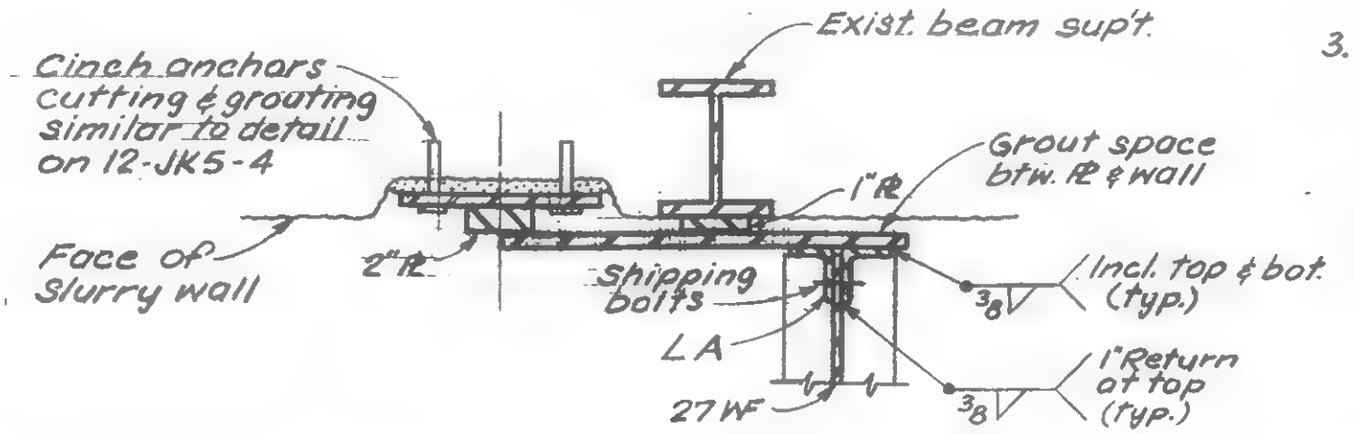

Notes:

1. See notes on 12-JK5-1.
2. If erection clearance is allowed between beam web & connection angles, size of weld has to be increased by the dimension of this gap (max. clearance = 1/8").
3. Due to the deviation of exist. beam support, the weld size shown has to be increased by the dimensions of the gap between PL and support. In no case should this gap be greater than 1/8".

LICENSED PROFESSIONAL ENGINEER — LESLIE E. ROBERTSON — No. 34360 — UNIVERSITY OF THE STATE OF NEW YORK

DESIGNED

DRAWN: S.C.

REVIEWED: E.L.

19-J-932

SKILLING, HELLE, CHRISTIANSEN, ROBERTSON — Structural & Civil Engineers

PROJECT: THE WORLD TRADE CENTER | TITLE: CONCRETE HOIST CATHEAD SUPPORTS | DATE: 5-12-69

REVISIONS
5-21-69
8-11-69
12-7-70

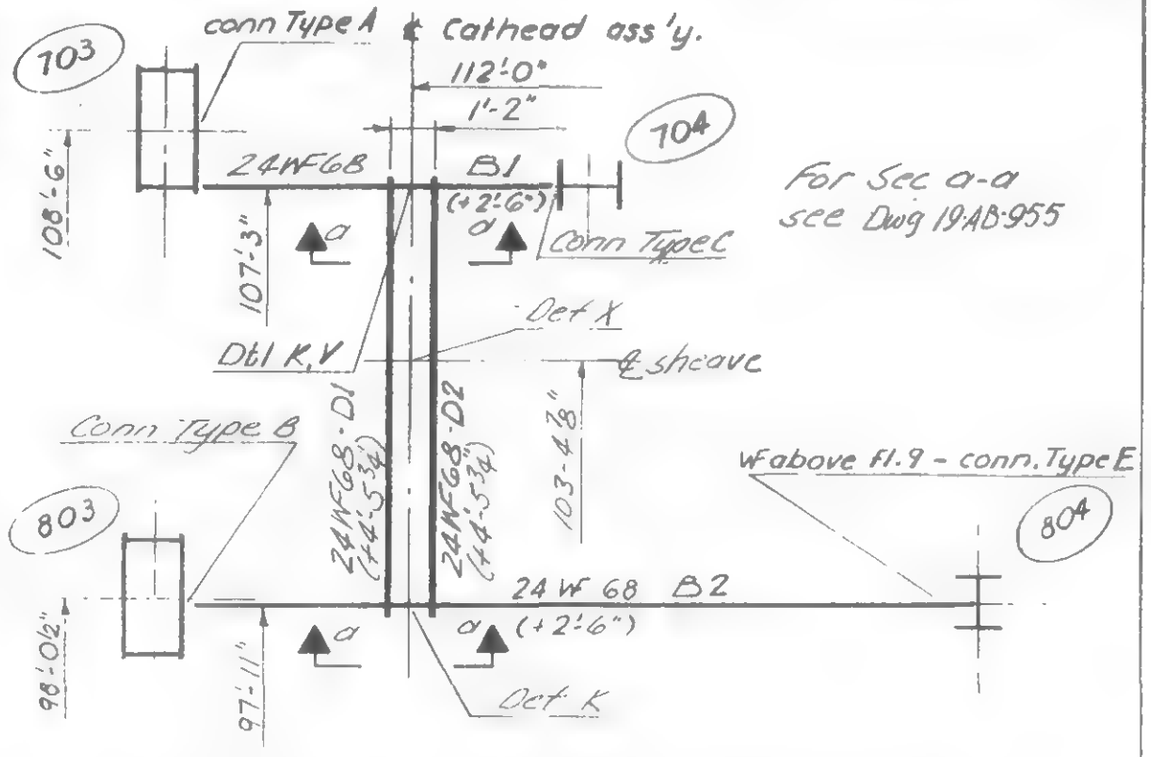

PLAN - FRAMING FLOOR 75 & BELOW

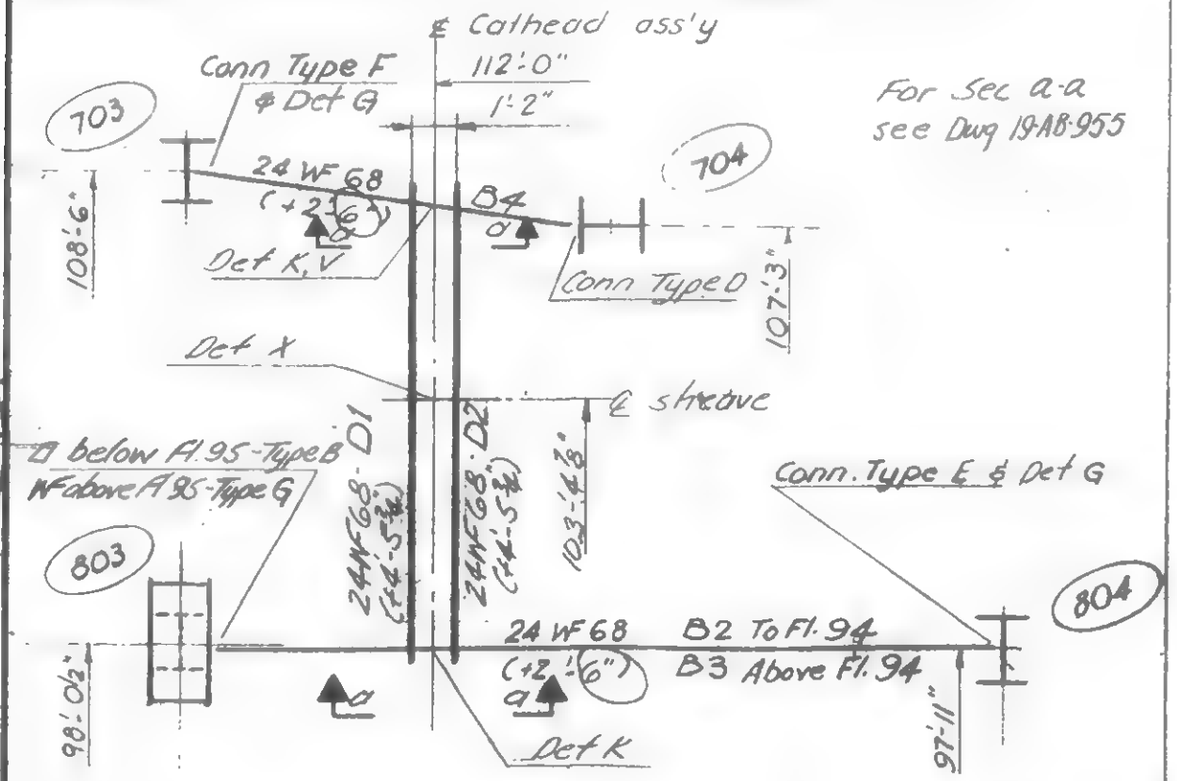

PLAN - FRAMING ABOVE FLOOR 75 to 105

Notes:

1. Beams and column connections shall be provided as shown at locations given in Schedule, 19-AB-954
2. Beams shall be re-used at all support levels, as shown in schematic elevation, 19-AB-952, and Schedule, 19-AB-954 & 19-AB-951.2
3. Where the beam length increases above Fl. 75 and 95, the same basic support beam may be extended as shown in Detail (G). A single set of 2-18 [members may be used for each beam, with bolt hole patterns corresponding to each extension length required.
4. Provide slotted holes as shown in Schedule and Details, 19-AB-954 & 955
5. All vertical welds at column connections shall be returned ¾" at top.
6. All bolts shall be ASTM A325, friction type, fully tensioned at each level.
7. Connections at box column faces, WF column flanges and web connections projecting beyond the column flanges shall be removed immediately after the support is no longer needed. Removal of connections may be performed by cutting "T" or angles at the toe of the fillet of the outstanding leg, or by cutting the connection weld. Any cutting or gouging of permanent members shall be repaired by filling with weld metal and grinding smooth.
8. For conn. dtls, see Dwgs 19-AB-951, 954, 955, 956

LICENSED PROFESSIONAL ENGINEER — LESLIE E. ROBERTSON — No. 34360 — UNIVERSITY OF THE STATE OF NEW YORK

DESIGNED
DRAWN F. Smith
REVIEWED

19-AB-951 (1)

SKILLING, HELLE, CHRISTIANSEN, ROBERTSON — Structural & Civil Engineers

PROJECT: THE WORLD TRADE CENTER | TITLE: CONCRETE HOIST CATHEAD SUPPORTS | DATE: 12-7-70

REVISIONS

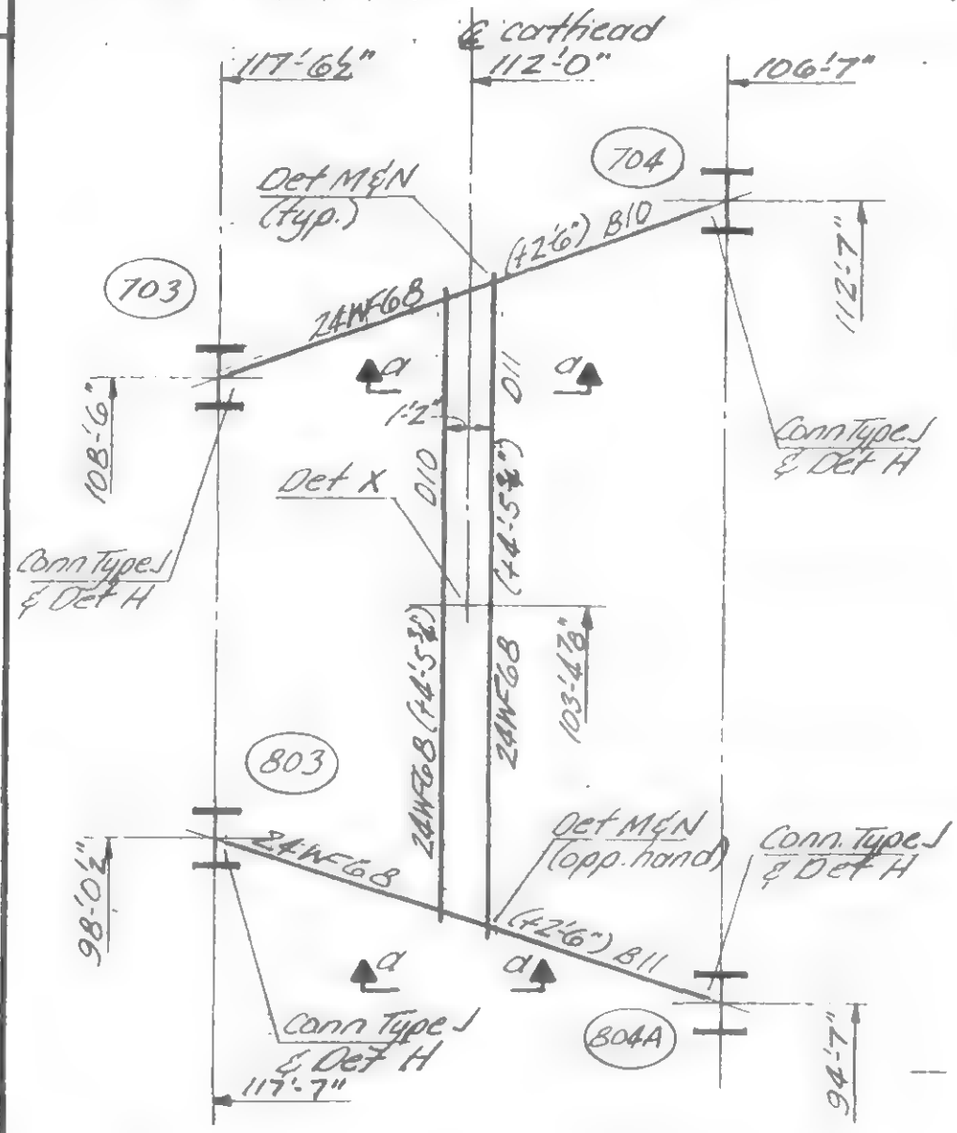

Plan - Framing Fl. 107 to 109

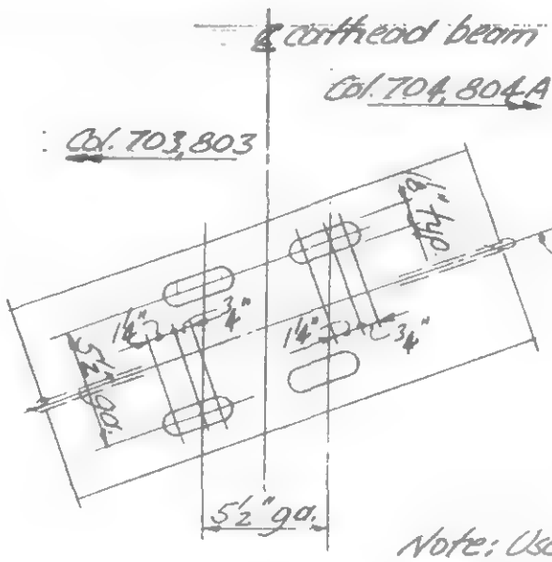

Detail M

Slotted holes in top flange of supporting beam at cathead connection

Detail N

Connection holes in cathead beams between cols 703 & 704

Note.
1. For schematic elevations of cathead support system see Dwg. 19-AB-952
2. For Section a-a see Dwg 19-AB-955
3. For column connection schedule below Floor 105 see Dwg. 19-AB-954

COLUMN CONNECTION SCHEDULE

Col.	Location: Floor Tower A	Location: Floor Tower B	Type *	e (in)	Bolts: Size	Bolts: N	Connection: L	Connection: Weld (1)	Remarks
703	107, 109	107, 109	J	6"	¾"ϕ	6	1'-5½"	5/16"	A
704	107, 109	107, 109	J	6"	¾"ϕ	6	1'-5½"	5/16"	
803	107, 109	107, 109	J	6"	¾"ϕ	6	1'-5½"	5/16"	A
804	107, 109	107, 109	J	6"	¾"ϕ	6	1'-5½"	5/16"	

* use w=6" at Det. H for both Type C & J

Remark A All bolt holes at this end shall be slotted.

LICENSED PROFESSIONAL ENGINEER — LESLIE E. ROBERTSON — No. 34560 — UNIVERSITY OF THE STATE OF NEW YORK

DESIGNED | DRAWN | REVIEWED

19-AB-951.2

SKILLING, HELLE, CHRISTIANSEN, ROBERTSON — Structural & Civil Engineers

PROJECT: THE WORLD TRADE CENTER | TITLE: CONCRETE HOIST CATHEAD SUPPORT | DATE: 12-7-70

REVISIONS

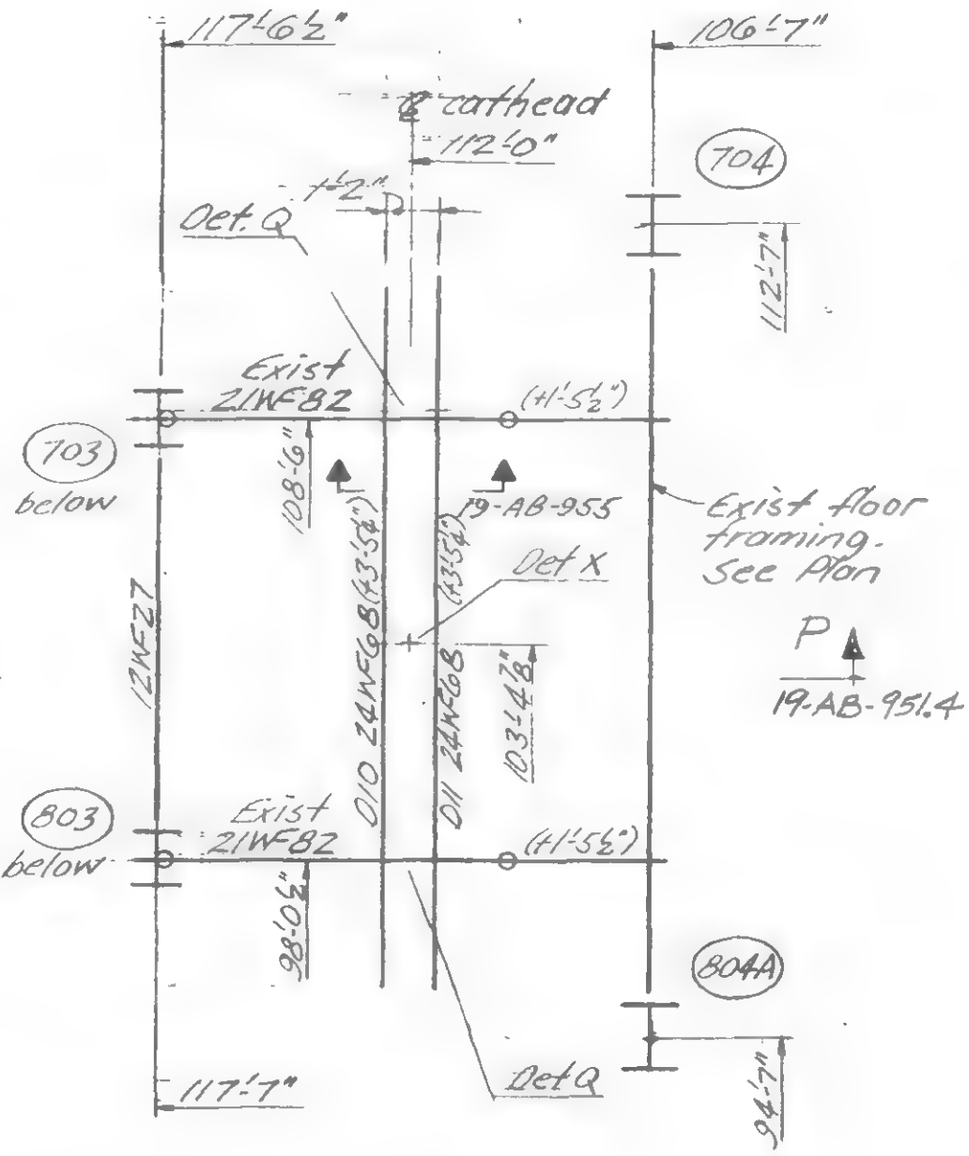

Framing Plan at Floor 110

See Dwg. No. 19-AB-951.1 for notes.

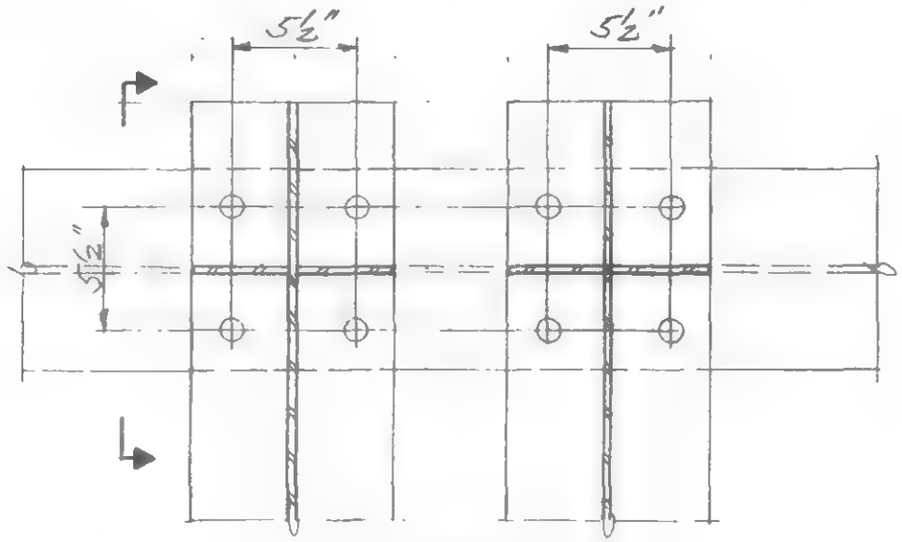

Plan

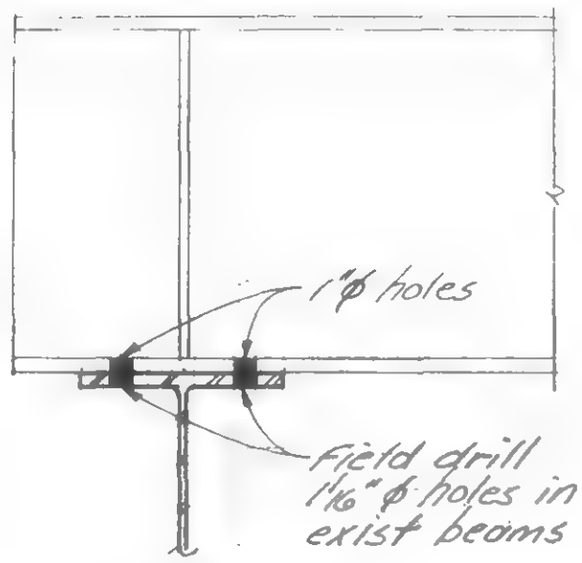

Section

Detail Q

LICENSED PROFESSIONAL ENGINEER — LESLIE E. ROBERTSON — No 34960 — UNIVERSITY OF THE STATE OF NEW YORK

DESIGNED

DRAWN J. Adams

REVIEWED

19-AB-951.3

SKILLING, HELLE, CHRISTIANSEN, ROBERTSON — Structural & Civil Engineers

PROJECT: THE WORLD TRADE CENTER | TITLE: CONCRETE HOIST CATHEAD SUPPORT | DATE: 12/7/70

REVISIONS

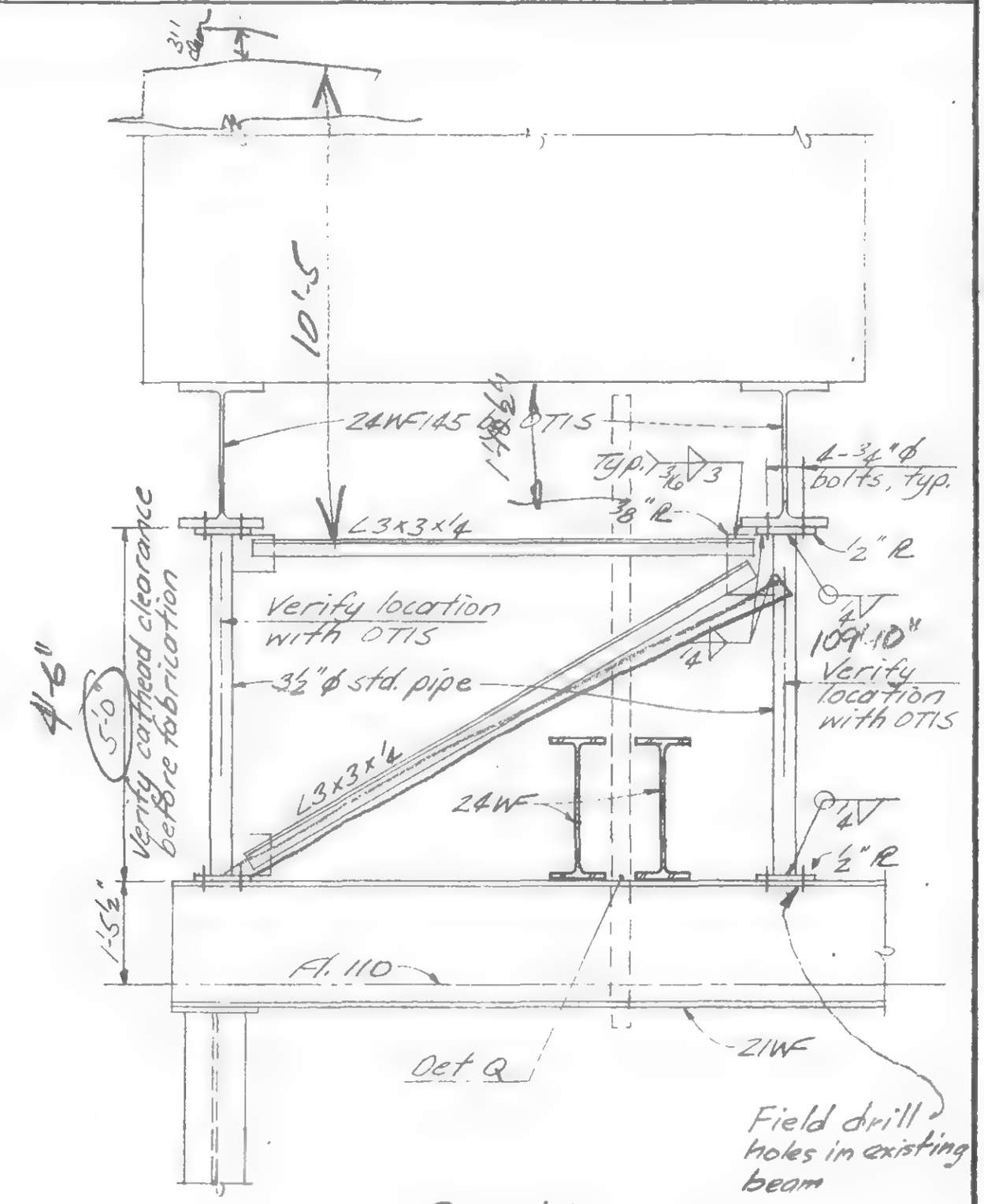

Section P-P

NED

DRAWN P Riehl

REVIEWED

19-AB-951.4

SKILLING, HELLE, CHRISTIANSEN, ROBERTSON — Structural & Civil Engineers

PROJECT: THE WORLD TRADE CENTER | TITLE: CONCRETE HOIST CATHEAD SUPPORT | DATE: 12/7/70

REVISIONS

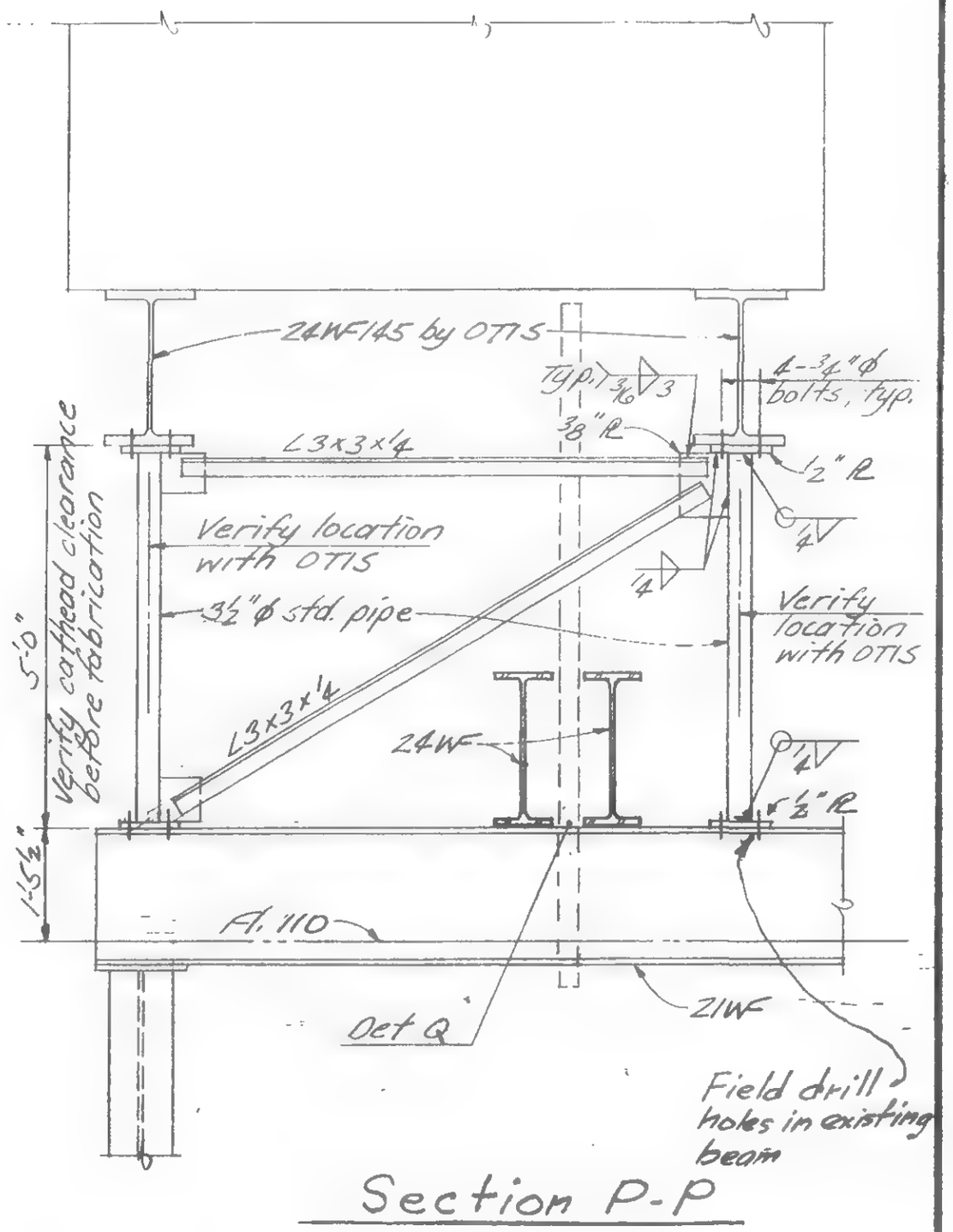

Section P-P

LICENSED PROFESSIONAL ENGINEER
LESLIE E. ROBERTSON
No. 34360
UNIVERSITY OF THE STATE OF NEW YORK

DESIGNED.

DRAWN P Otchi

CHECKED

19-AB-951.4

SKILLING, HELLE, CHRISTIANSEN, ROBERTSON — Structural & Civil Engineers

PROJECT THE WORLD TRADE CENTER | TITLE CONCRETE HOIST CATHEAD SUPPORTS | DATE 5-12-69

REVISIONS.
8-11-69
12-7-70

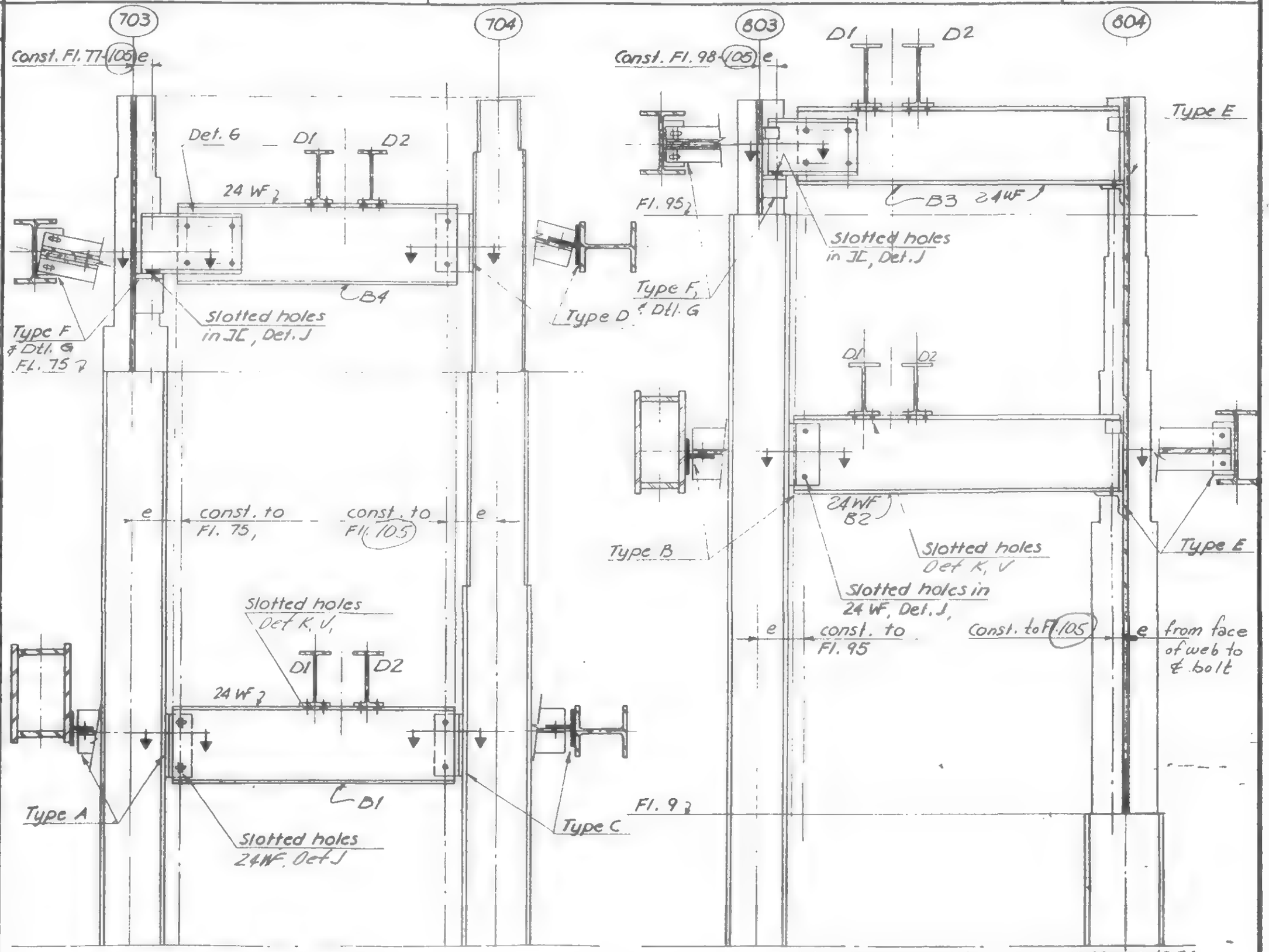

Note. For conn. dtls, see Dwg 19-AB-953 & 954
For conn. locations, see Dwg 19-AB-954

SCHEMATIC ELEVATIONS
CATHEAD SUPPORT SYSTEM

19-AB-952

LICENSED PROFESSIONAL ENGINEER
LESLIE E. ROBERTSON
No. 34360
UNIVERSITY OF THE STATE OF NEW YORK

DESIGNED
DRAWN
REVIEWED

SKILLING, HELLE, CHRISTIANSEN, ROBERTSON — Structural & Civil Engineers

PROJECT: THE WORLD TRADE CENTER | TITLE: CONCRETE HOIST CATHEAD SUPPORTS - DETAILS | DATE: 5-12-69

REVISIONS
8-11-69
12-7-70

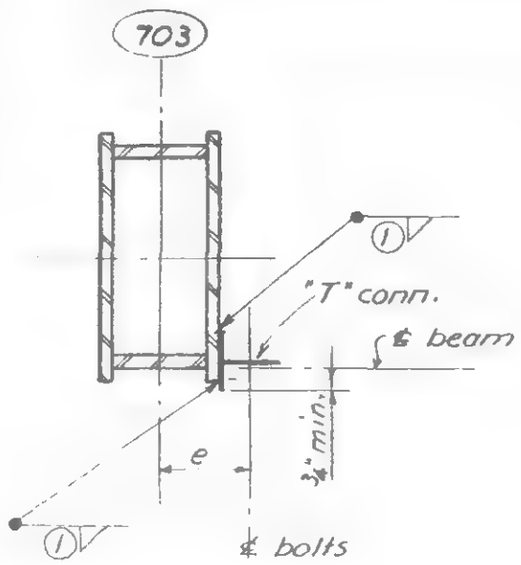

TYPE A

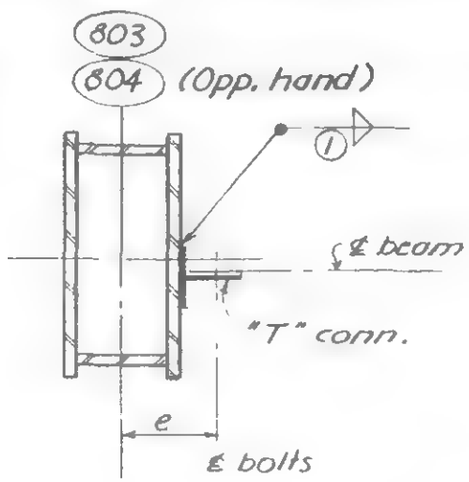

TYPE B

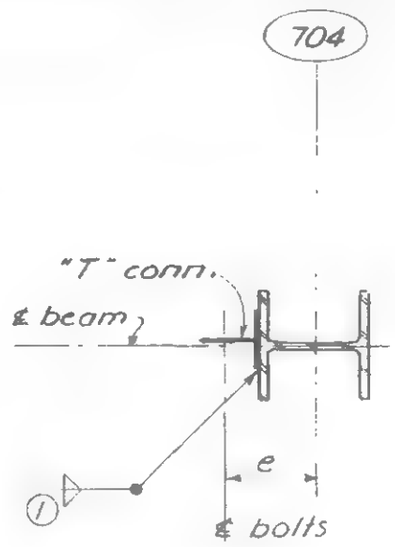

TYPE C

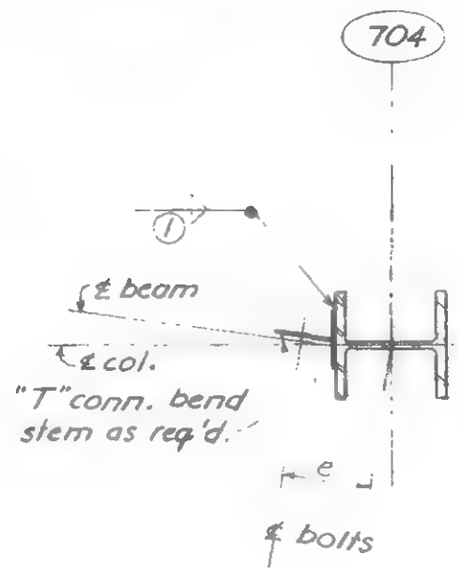

TYPE D

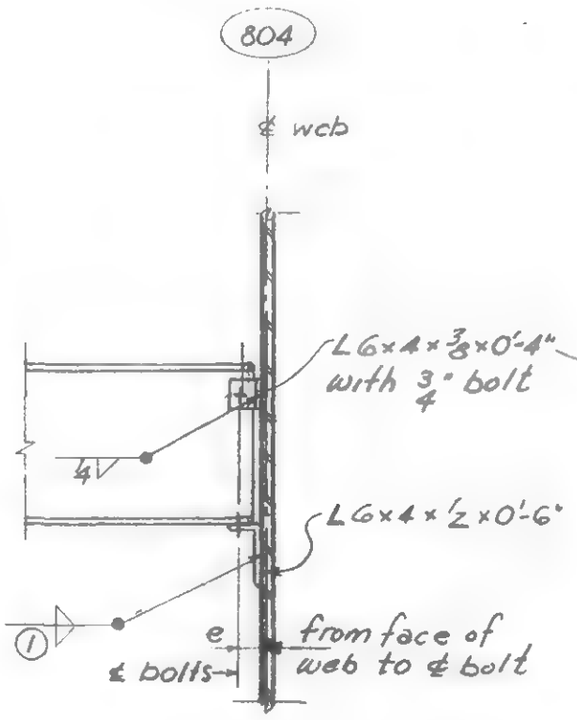

TYPE E

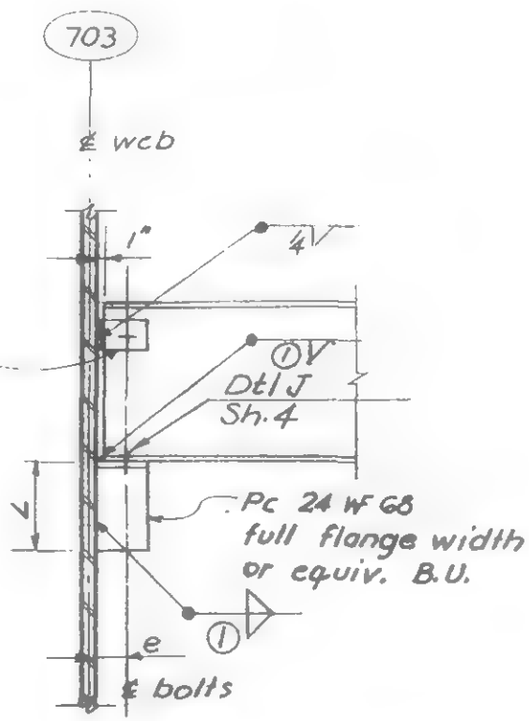

TYPE F

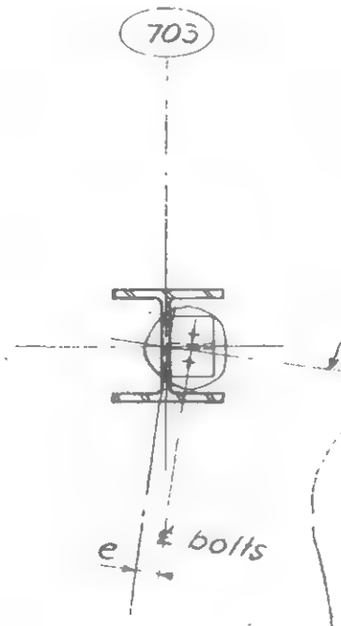

PLAN - TYPE F
AT COL 703

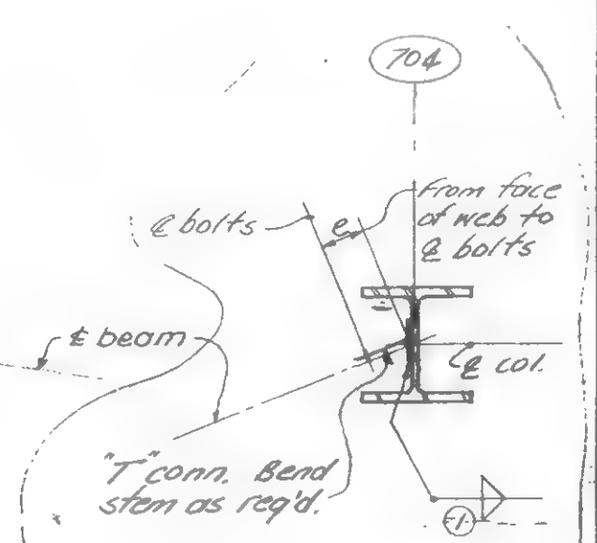

TYPE J
At Col. 704 as shown
Col. 703, 803, 804A
similar

Notes: 1. For typical "T" connection see Dwg. 19-AB-954.
2. For details of seated connections see Dwg. 19-AB-954.

LICENSED PROFESSIONAL ENGINEER
LESLIE E. ROBERTSON
No. 34360
UNIVERSITY OF THE STATE OF NEW YORK

DESIGNED
DRAWN F. Smith
REVIEWED

19-AB-953

SKILLING, HELLE, CHRISTIANSEN, ROBERTSON — Structural & Civil Engineers

PROJECT: THE WORLD TRADE CENTER | TITLE: CONCRETE HOIST CATHEAD SUPPORTS - DETAILS | DATE: 5-12-69

REVISIONS
8-11-69
12-7-70

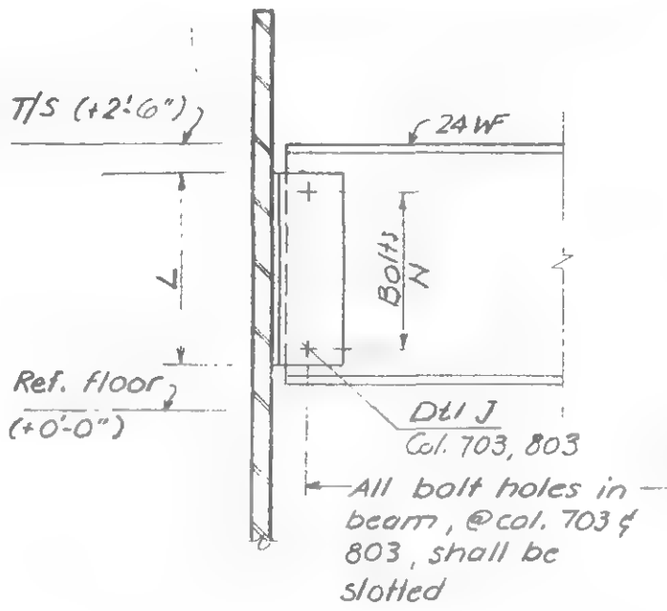

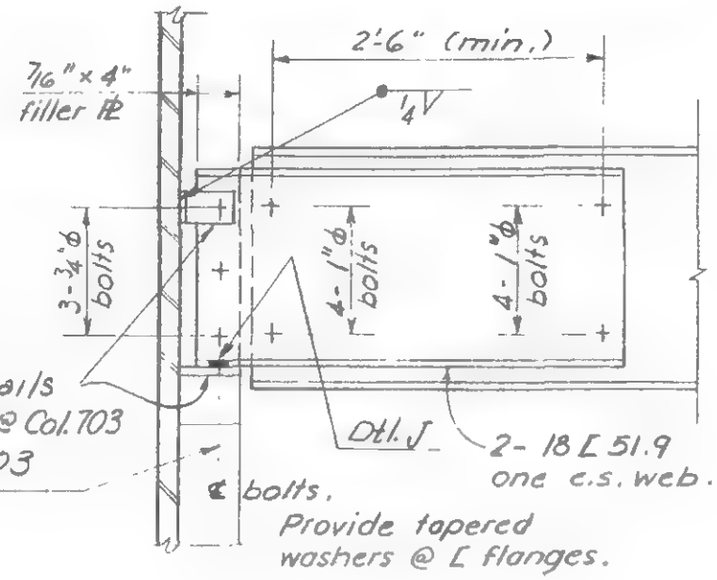

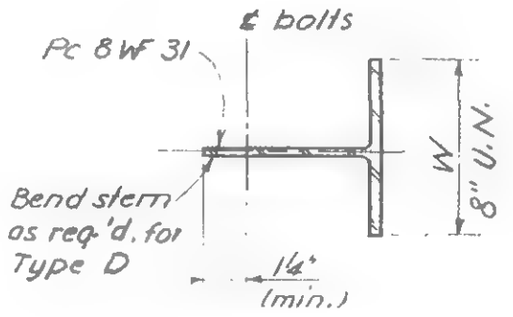

Detail H
Typical 'T' Connection.

Detail G
Typical Support Beam Extension
Col. 703, Above Floor 75, Below Floor 105
Col. 803, Above Floor 95, Below Floor 105

Typical Section @ Columns
Type A, B, C, D.

COLUMN CONNECTION SCHEDULE

LOCATION * COL.	FLOOR TOWER A	FLOOR TOWER B	TYPE	e (IN)	BOLTS SIZE	BOLTS N	CONNECTION L	CONNECTION WELD (1)	REMARKS
703	20-74	11-74	A	12 3/8"	1"ϕ	6	1'-5 1/2"	5/16	
	76-105	76-105	F	4 1/2"	3/4"ϕ	2	0'-10"	5/16	Use detail G @ 703
704	20-74	11-74	C	11 3/4"	1"ϕ	6	1'-5 1/2"	5/16	
	76-105	76-105	D	11 3/4"	1"ϕ	6	1'-5 1/2"	5/16	W=6" @ Dtl H, Above F 95.
803	20-94	11-94	B	12 3/8"	1"ϕ	6	0'-11 1/2"	5/16	
	97-105	97-105	F	3 1/2"	3/4"ϕ	2	0'-10"	5/16	Use detail G @ 803
804	—	-							
	20-105	11-105	E	1 1/16"	3/4"ϕ	2	—	5/16	

* Twr A, Connections @ Floors: 20, 23, 26, 29, 32, 35 38, 40, 42, 44, 47, 50, 53, 56, 59, 62, 65, 68, 71, 74, 76, 79, 82, 85, 88, 91, 94, 97, 100, 103, 105

* Twr B, Connections @ Floors: 11, 14, 17, 20, 23, 26, 29, 32, 35, 38, 40, 42, 44, 47, 50, 53, 56, 59, 62, 65, 68, 71, 74, 76, 79, 82, 85, 88, 91, 94, 97, 100, 103

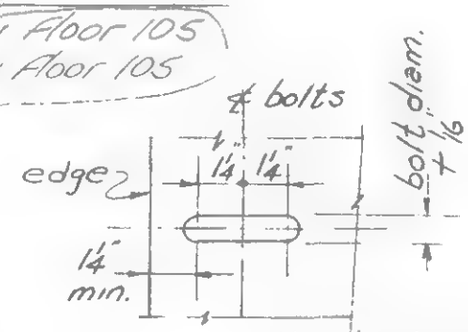

Use hardened washer against slotted face, 3/8" thick.

Detail J - Slotted Holes in Beams @ Columns 703 & 803

LICENSED PROFESSIONAL ENGINEER — LESLIE E. ROBERTSON — No. 34360 — UNIVERSITY OF THE STATE OF NEW YORK

DESIGNED
F. Smith
REVIEWED

19-AB-954

SKILLING, HELLE, CHRISTIANSEN, ROBERTSON — Structural & Civil Engineers

PROJECT: THE WORLD TRADE CENTER | TITLE: CONCRETE HOIST CATHEAD SUPPORT | DATE: 5-12-69

REVISIONS
5-21-69
8-11-69

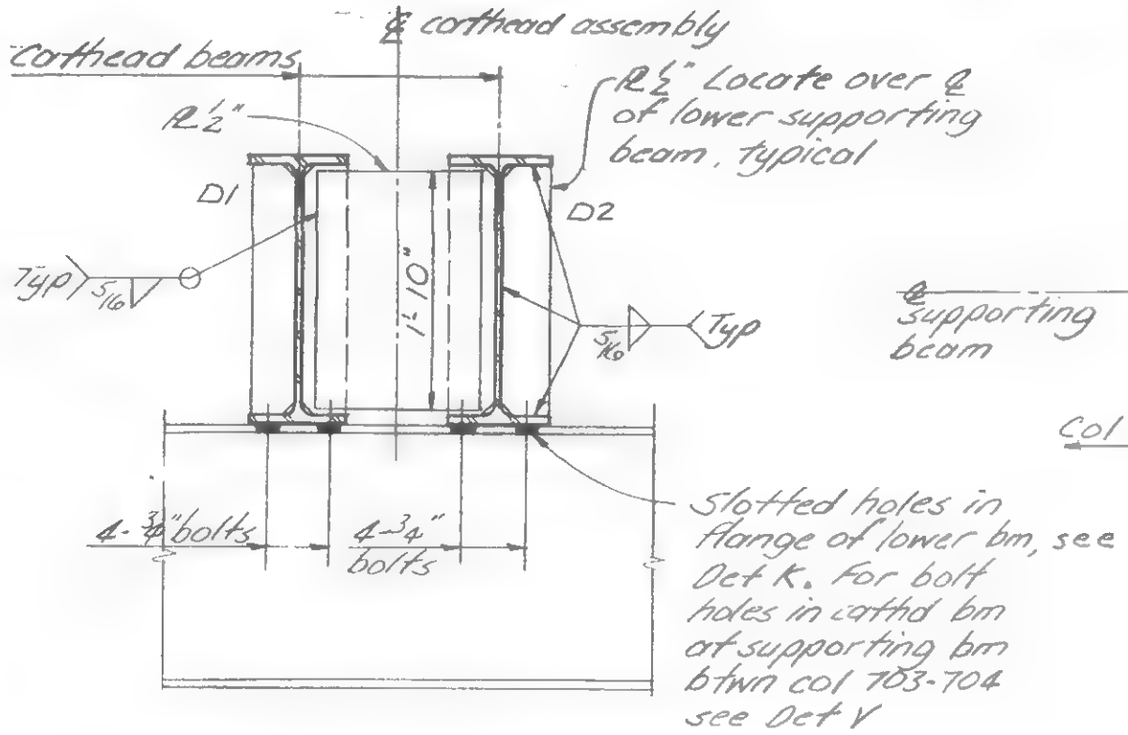

Section a-a.

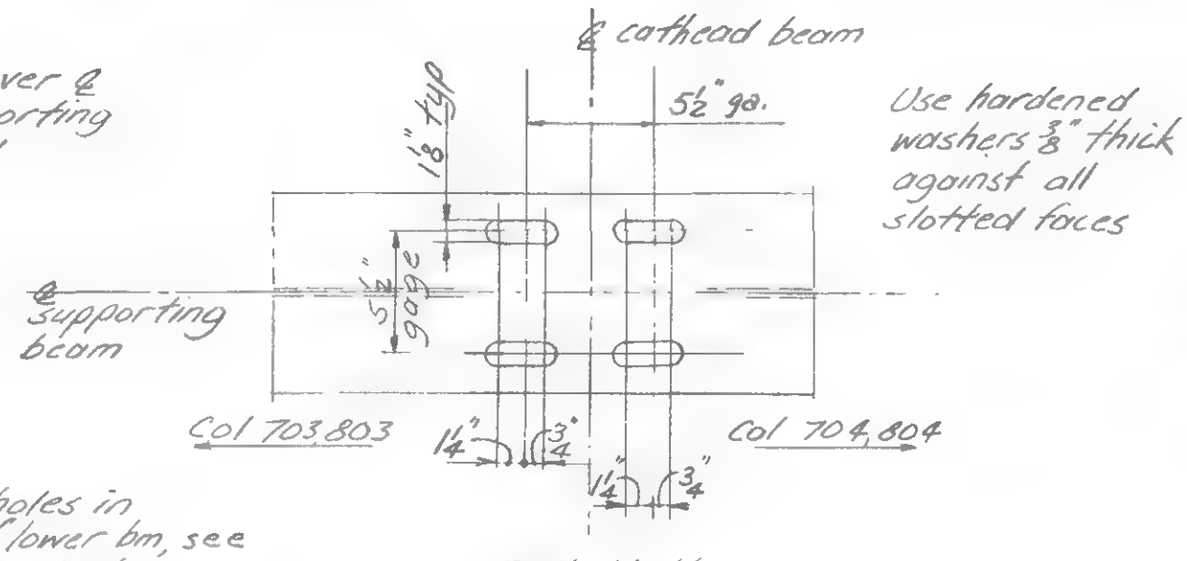

Detail K

SLOTTED HOLES IN SUPPORTING BEAMS AT CATHEAD CONNECTIONS

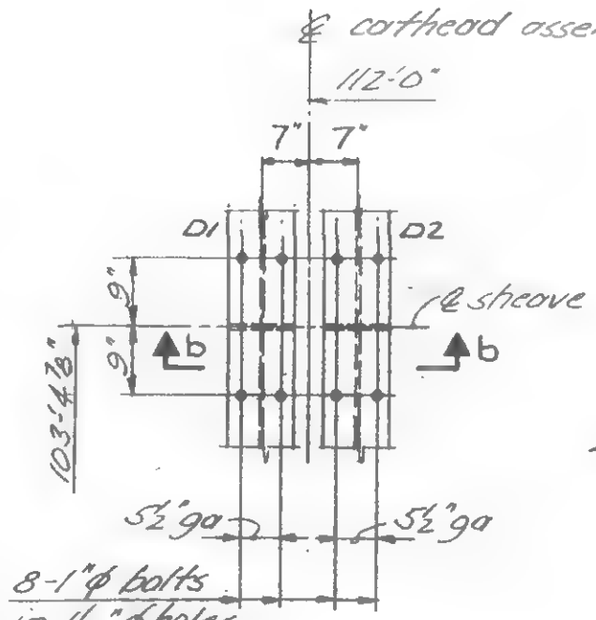

DETAIL X

SHEAVE CONN TO CATHEAD BM

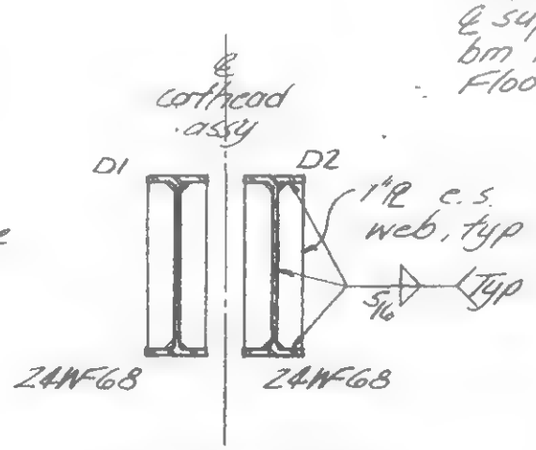

Section b-b

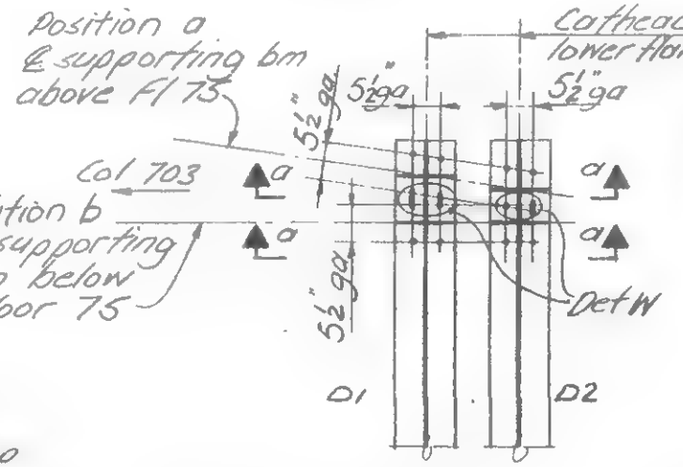

All bolt holes 1"ϕ except Det W.

DETAIL V

CONNECTION HOLES IN CATHEAD BEAMS AT SUPPORT BEAM BETWEEN COL 703 & 704

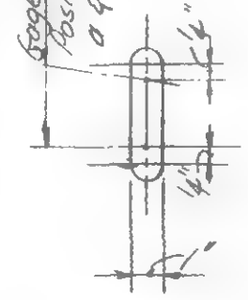

Use hardened washers ⅜" thick against slotted face

DETAIL W

Ref dwg (Alons)
19AB951

19AB955

LICENSED PROFESSIONAL ENGINEER — LESLIE E. ROBERTSON — No. 34360 — UNIVERSITY OF THE STATE OF NEW YORK

DESIGNED
DRAWN
REVIEWED

SKILLING, HELLE, CHRISTIANSEN, ROBERTSON — Structural & Civil Engineers

PROJECT: THE WORLD TRADE CENTER | TITLE: CONCRETE HOIST LEAD SHEAVE SUPPORTS | DATE: 5-12-69

REVISIONS
5-21-69
8-11-69

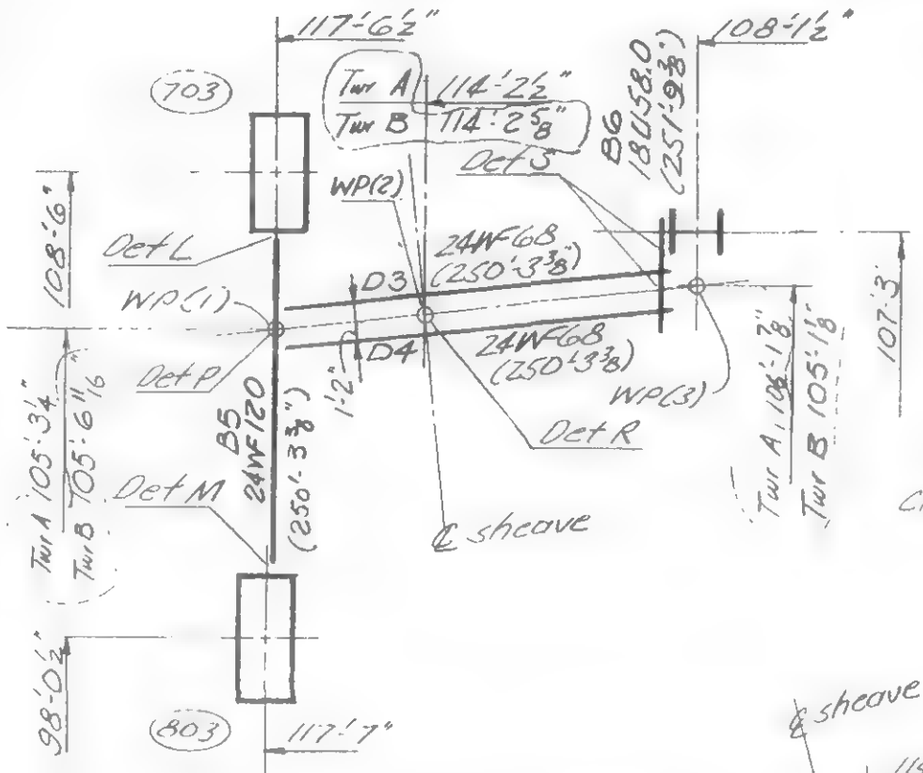

PLAN - LEAD SHEAVE FRAMING

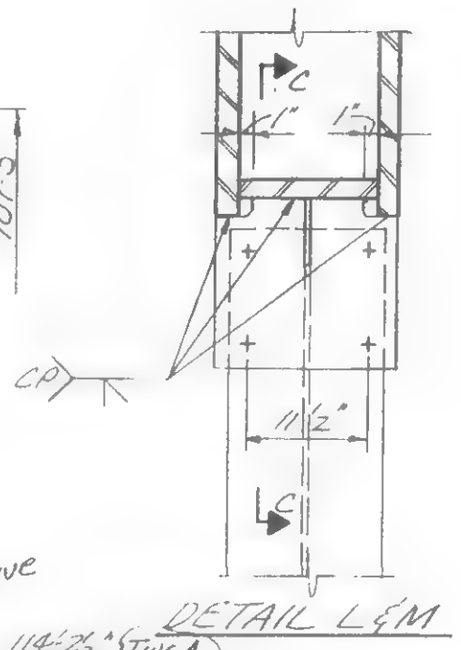

DETAIL L&M

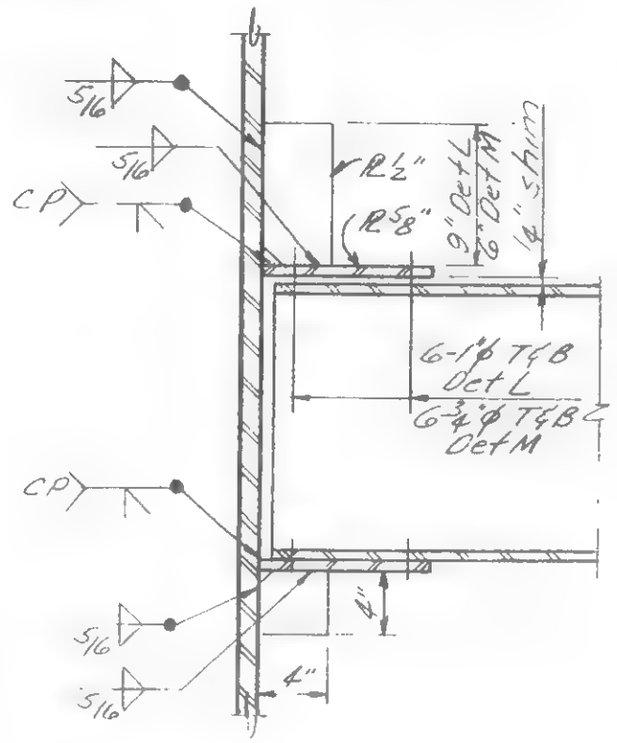

Section C-C

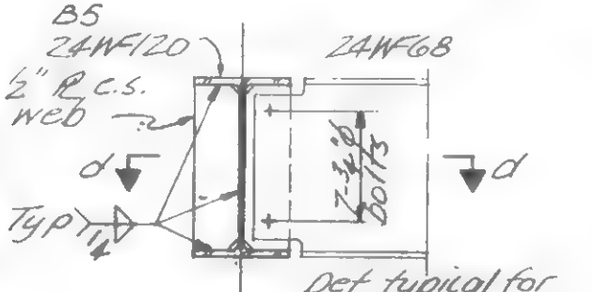

Det typical for each sheave beam

DETAIL P

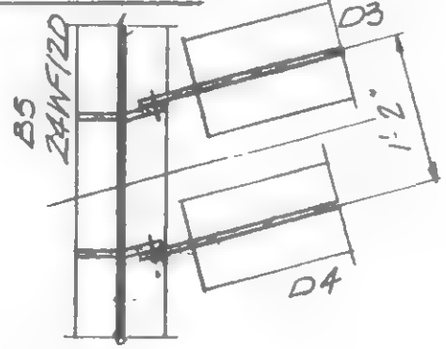

Section d-d

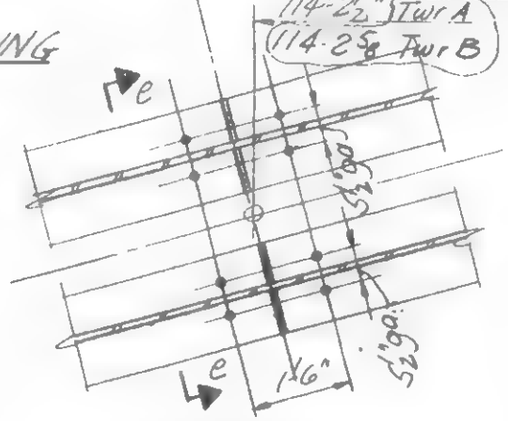

DETAIL R

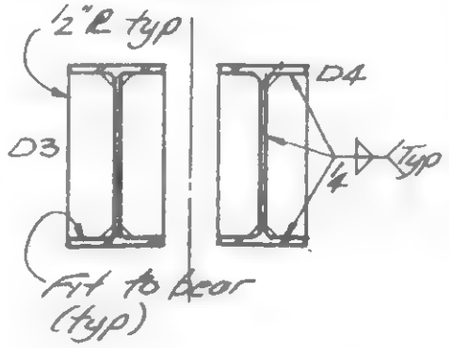

Section e-e

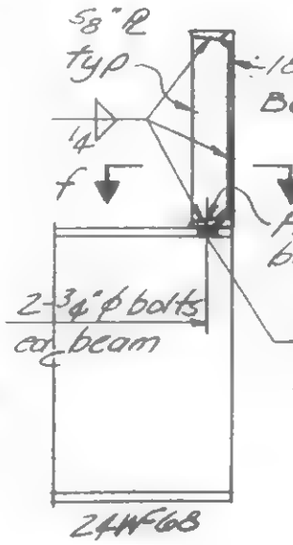

DETAIL S

Section C-C

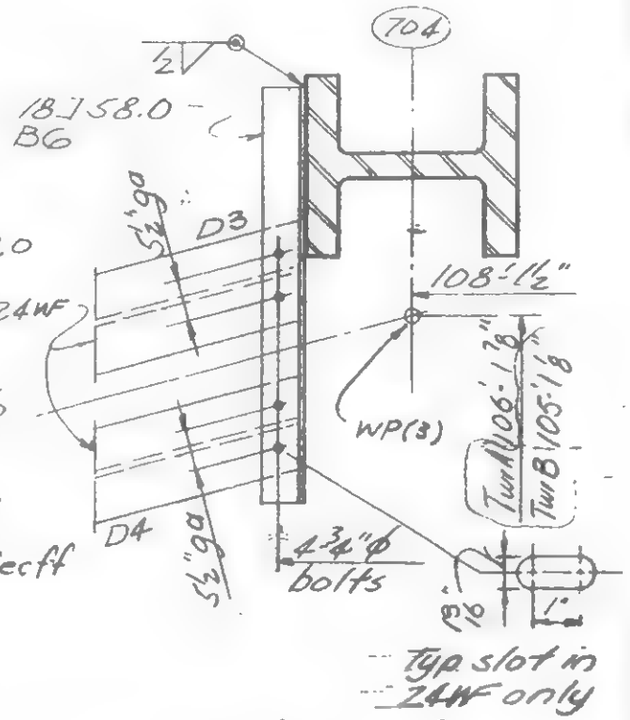

Section f-f

LICENSED PROFESSIONAL ENGINEER
LESLIE E. ROBERTSON
No. 34360
UNIVERSITY OF THE STATE OF NEW YORK

DESIGNED
DRAWN
REVIEWED

19-AB-956

SKILLING, HELLE, CHRISTIANSEN, ROBERTSON — Structural & Civil Engineers

PROJECT THE WORLD TRADE CENTER | TITLE EXTERIOR WALL-BEAM SEAT REPAIR - FL. 7 & 9 | DATE 8/20/69

REVISIONS

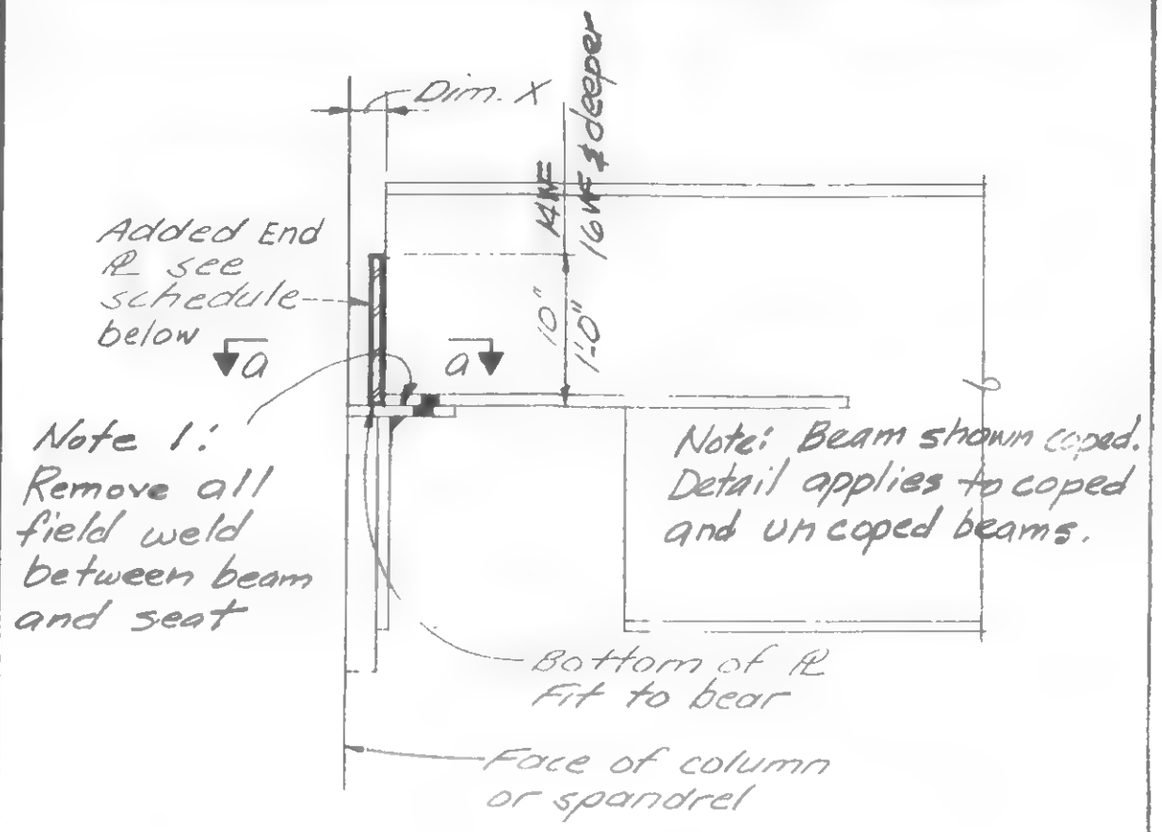

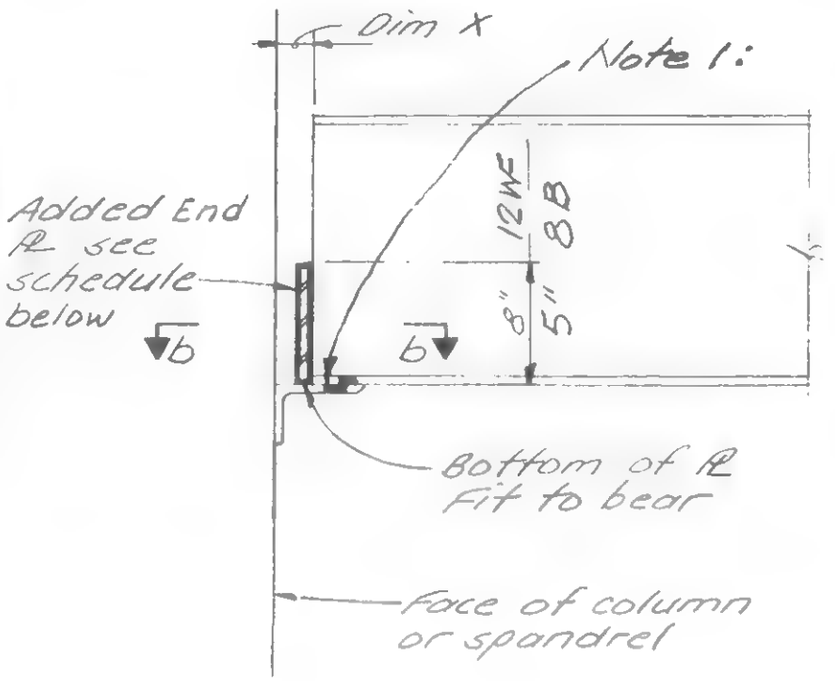

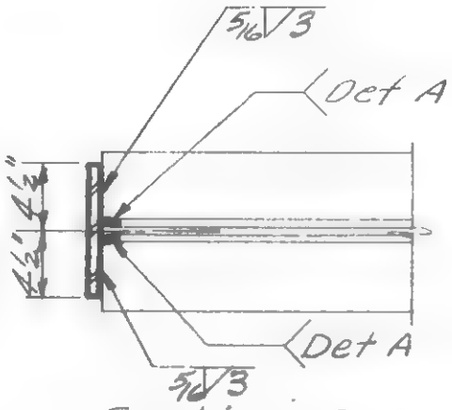

Section a-a
At beams with web doublers

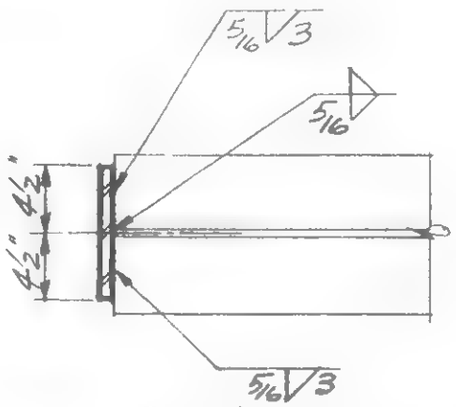

Section a-a
At beams without web doublers

Floor 7 Dim X	Floor 9 Dim X	Thickness End PL
To 1 9/16"	To 1 1/16"	None
1 5/8" to 2 1/2"	1 1/8" to 2"	1/2"
2 9/16" to 2 3/4"	2 1/16" to 2 1/4"	3/4"
2 13/16" to 3	2 5/16" to 2 1/2"	1"

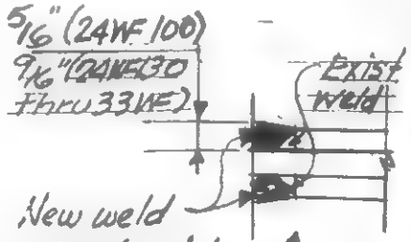

Detail A

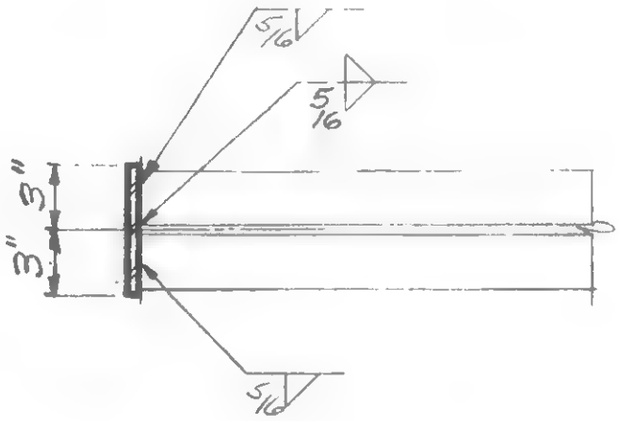

Floor 7&9 Dim X	Thickness End PL
To 1 1/16"	None
1 1/8" to 1 1/2"	1/2"
1 9/16 to 1 3/4"	3/4"
1 13/16" to 2	1"
2 1/16" to 2 1/4"	1 1/4"
2 5/16" to 2 1/2"	1 1/2"

DESIGNED H. Root
DRAWN J. Adams
REVIEWED

Note: Where repair is required, it is likely that damper conn. will not mate. See 19-AB-958 for repair.

19-AB-957

SKILLING, HELLE, CHRISTIANSEN, ROBERTSON — Structural & Civil Engineers

PROJECT THE WORLD TRADE CENTER | TITLE EXTERIOR WALL-DAMPER CONN. REPAIR-FL 7&9 | DATE 8/20/69

REVISIONS

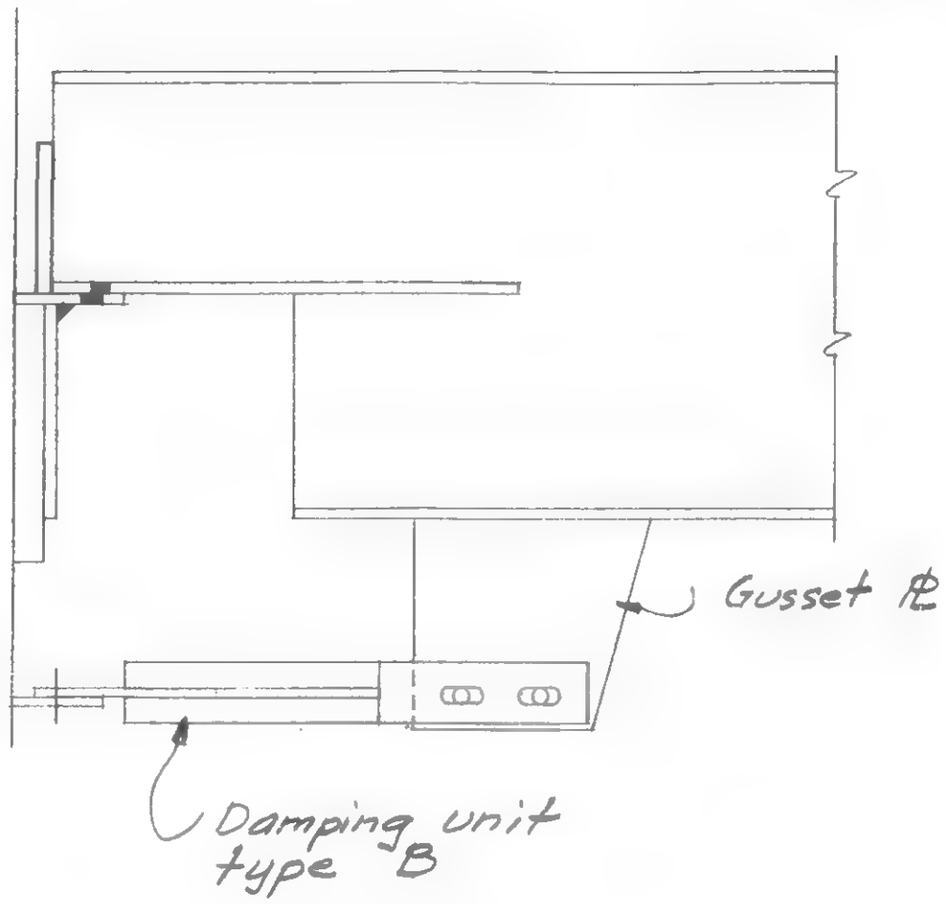

NOTES:
1. Bolt holes may be reamed to accomodate mis-matched holes providing that edge distances are maintained as shown in Detail 1&2.
2. Were edge distances cannot be maintained Contractor may rectify the deficiency by plug welding and by re-reaming.

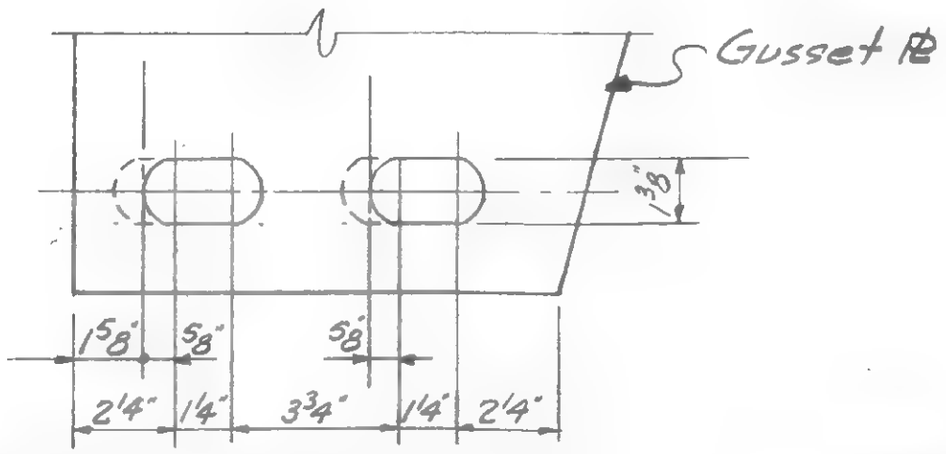

Max. reaming of slots Detail 1

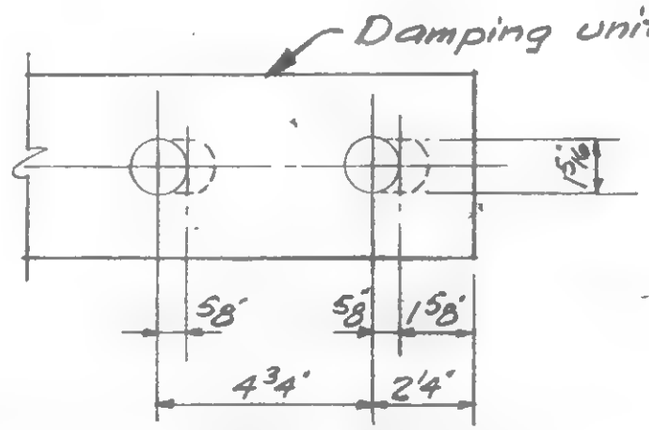

Max. reaming of holes Detail 2
Provide thickened washers per specs.

R

DESIGNED H. Kost
DRAWN A. FRANQUI
REVIEWED

19-AB-958

SKILLING, HELLE, CHRISTIANSEN, ROBERTSON — Structural & Civil Engineers

PROJECT: THE WORLD TRADE CENTER | TITLE: EXTERIOR WALL - TRUSS SEAT REPAIR | DATE: 9/2/69

REVISIONS

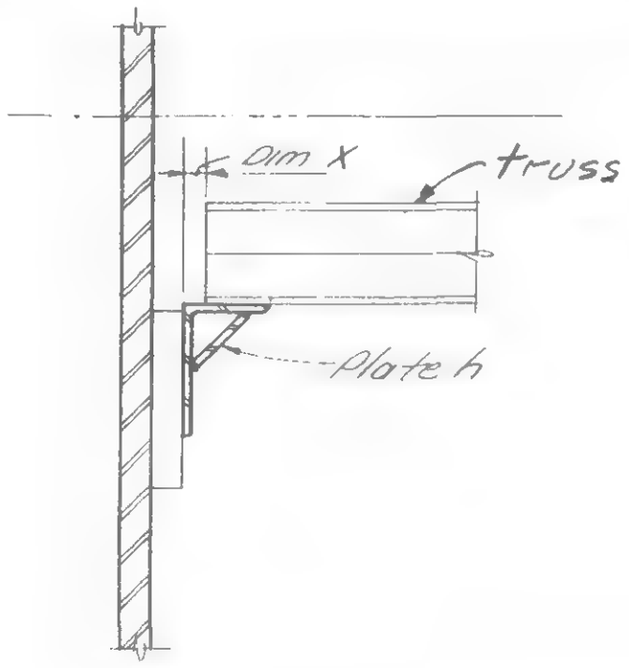

Detail A

SCHEDULE OF REPAIR DETAIL						
DIM. X	FLOORS					
	10-40	44	45-48	49-74	78	79-106
To 1/16"	None	None	None	None	None	None
1/8" to 1/2"	A	A	A	A	B	A
9/16" to 1"	A	B	A	A	B	A
1 1/16" to 1 1/2"	A	B	A	B	B	B

Note: Where repair is required, it is likely that damper connection will not mate. See 19-AB-960 for repair.

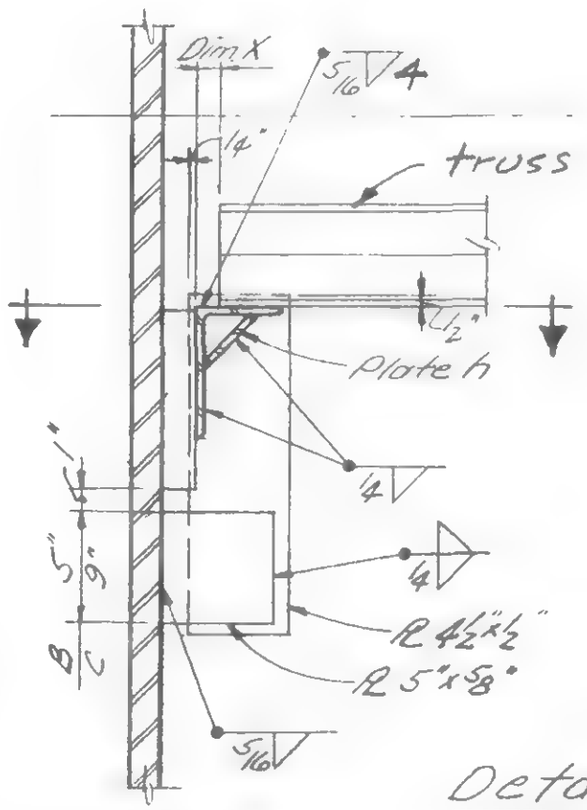

Section

Detail B

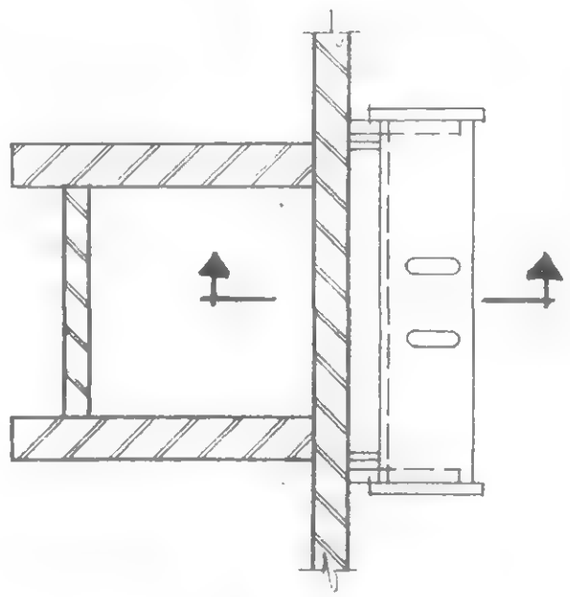

Plan

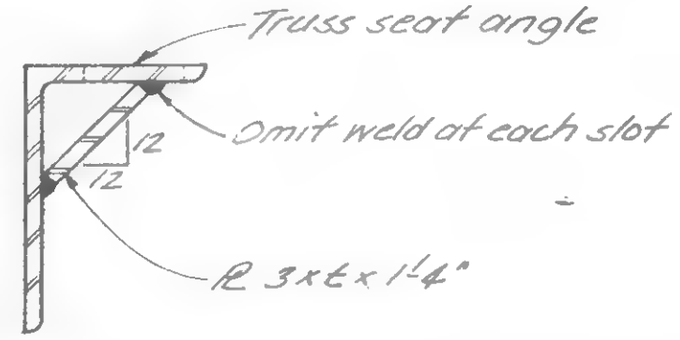

Floors 10-40, 45-74, 79-106
t = 5/16" typical, except
t = 3/8" @ Cols. 111, 149, 217, 243, 311, 349, 417 & 443

Floors 44 & 78:
t = 1/2" typical, except
t = 5/8" @ Cols. 111, 149, 311 & 349

Detail of Plate h

DESIGNED H. Roet
DRAWN J. Adams
REVIEWED W. Brewer

19-AB-959

SKILLING, HELLE, CHRISTIANSEN, ROBERTSON — Structural & Civil Engineers

PROJECT: THE WORLD TRADE CENTER

TITLE: FLOOR 25 - TOWER A - STRUCTURAL REPAIR

DATE: 10/31/69

REVISIONS

12/1/69

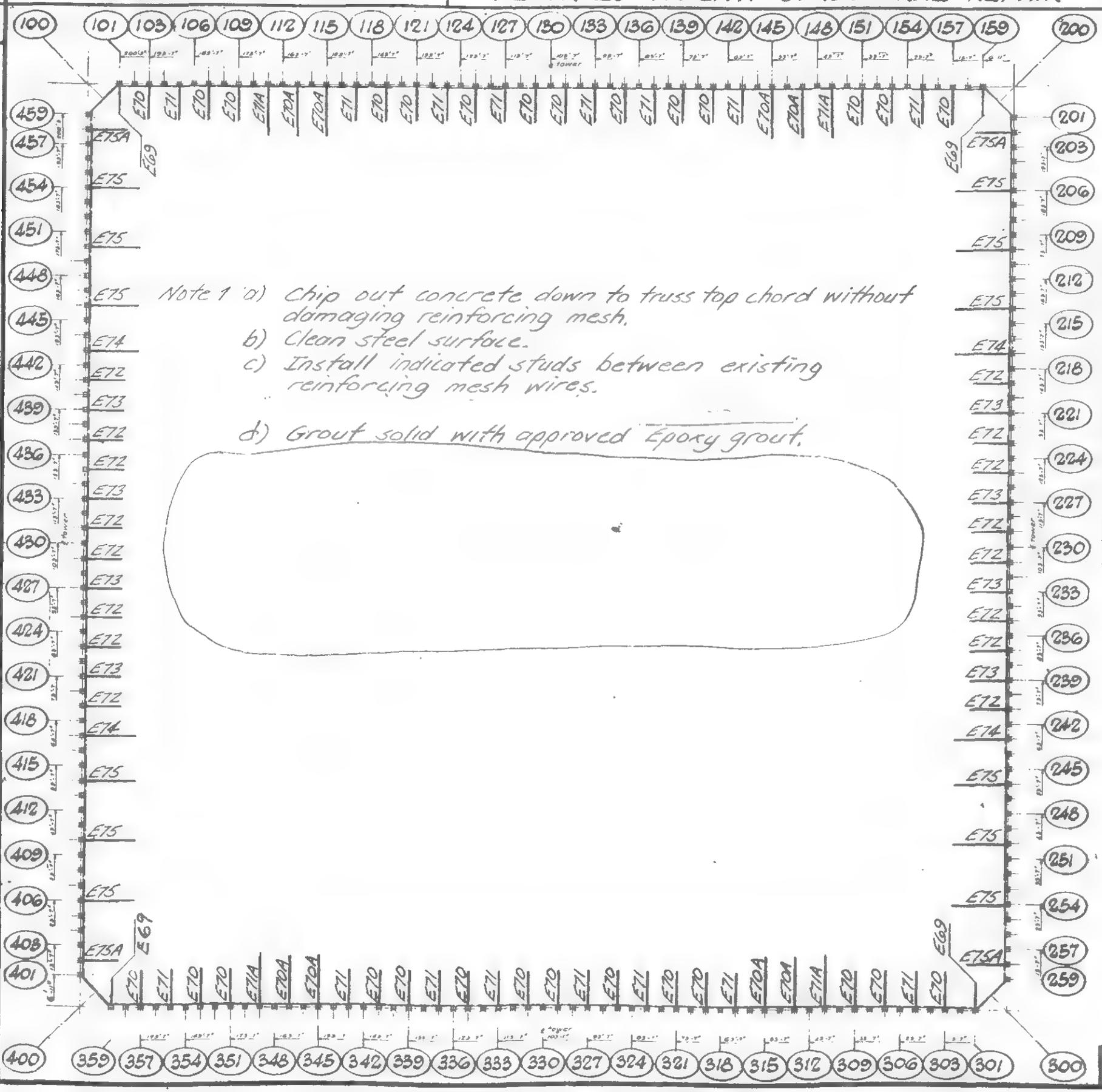

Note 1 a) Chip out concrete down to truss top chord without damaging reinforcing mesh.
b) Clean steel surface.
c) Install indicated studs between existing reinforcing mesh wires.

d) Grout solid with approved Epoxy grout.

Det. Sch.	Det. Installed	Corrective Action
E69	E60	None
E70	None	None
E70A	None	E70AR
E71	None	None
E71A	None	E71AR
E72	None	None
E73	None	None
E74	None	E74R
E75	E68	E75R
E75A	E68A	None

DESIGNED

DRAWN
J Adams

REVIEWED
W. Brewer

19-A-961.1

SKILLING, HELLE, CHRISTIANSEN, ROBERTSON — Structural & Civil Engineers

PROJECT: THE WORLD TRADE CENTER | TITLE: FLOOR 25 - TOWER A - STUD REPAIR | DATE: 10/31/69

REVISIONS

12/1/69

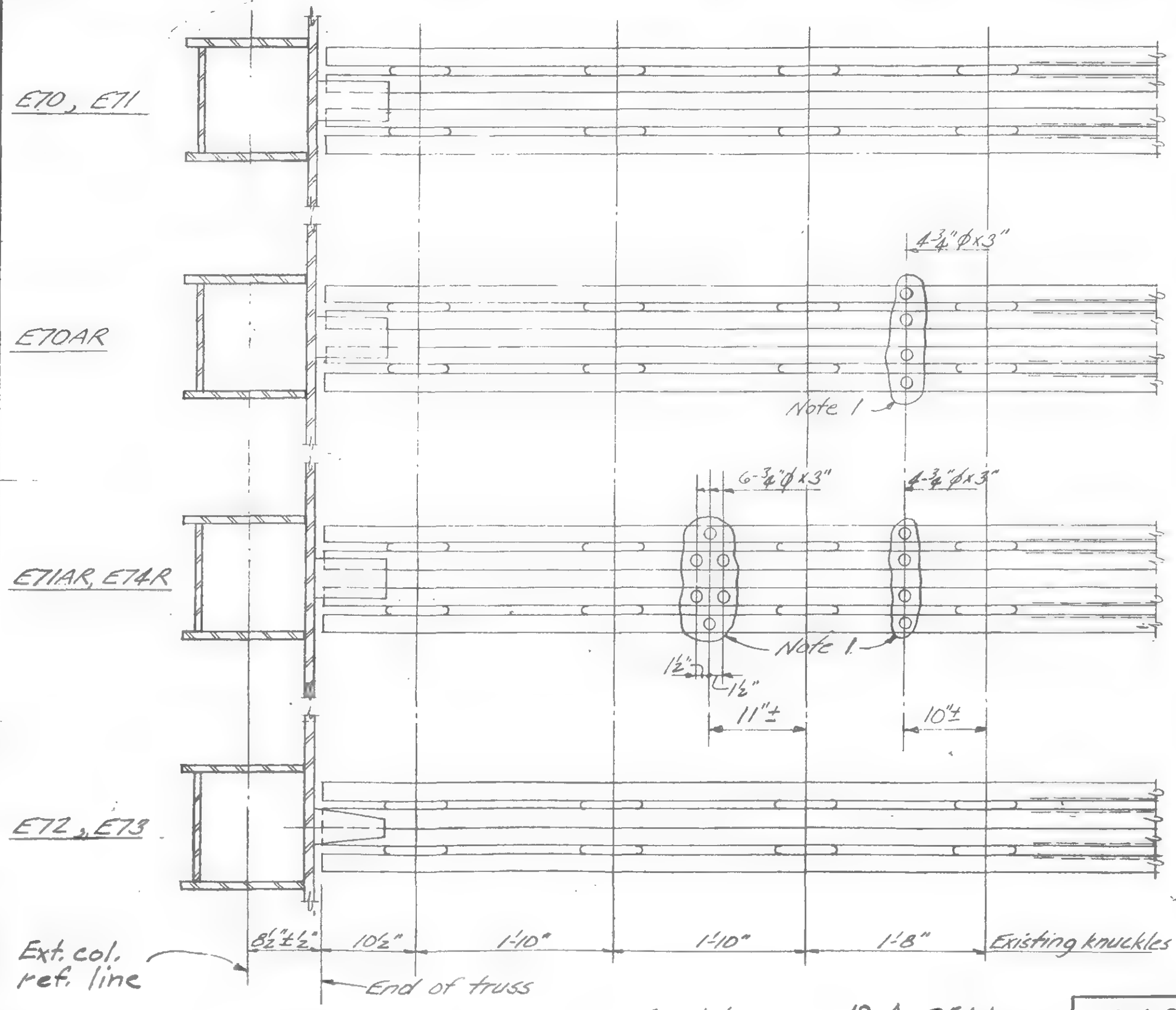

LICENSED PROFESSIONAL ENGINEER — LESLIE E. ROBERTSON — No. 34860 — UNIVERSITY OF THE STATE OF NEW YORK

DESIGNED

DRAWN J. Adams

REVIEWED W. Brewer

For Note 1, see 19-A-961.1

19-A-961.2

SKILLING, HELLE, CHRISTIANSEN, ROBERTSON — Structural & Civil Engineers

PROJECT: THE WORLD TRADE CENTER | TITLE: FLOOR 25 - TOWER A - STUD REPAIR | DATE: 10/31/69

REVISIONS

12/1/69

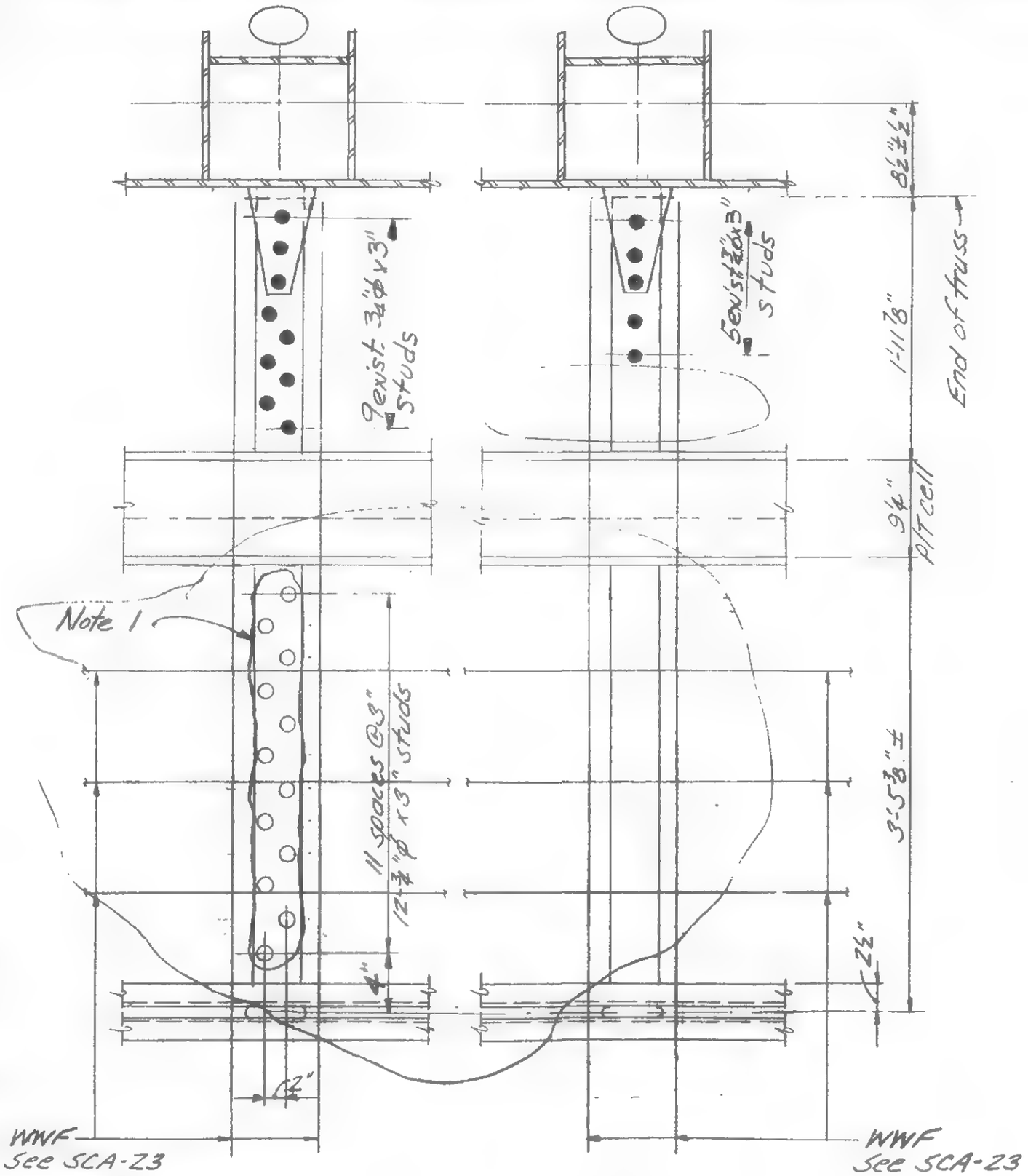

E75R

E75A

For note 1, see 19-A-961.1

19-A-961.3

LICENSED PROFESSIONAL ENGINEER
LESLIE E. ROBERTSON
No. 34360
UNIVERSITY OF THE STATE OF NEW YORK

DESIGNED

DRAWN J. Adams

REVIEWED LE Brewer

SKILLING, HELLE, CHRISTIANSEN, ROBERTSON — Structural & Civil Engineers

PROJECT THE WORLD TRADE CENTER | TITLE MODIFIED DECK SHELF ANGLE WELDING | DATE 3-24-70

REVISIONS

7-20-70
7-27-70

Note: Detail 1A thru 1H indicate various extents of field weld Detail 1 for floors indicated in Schedule.

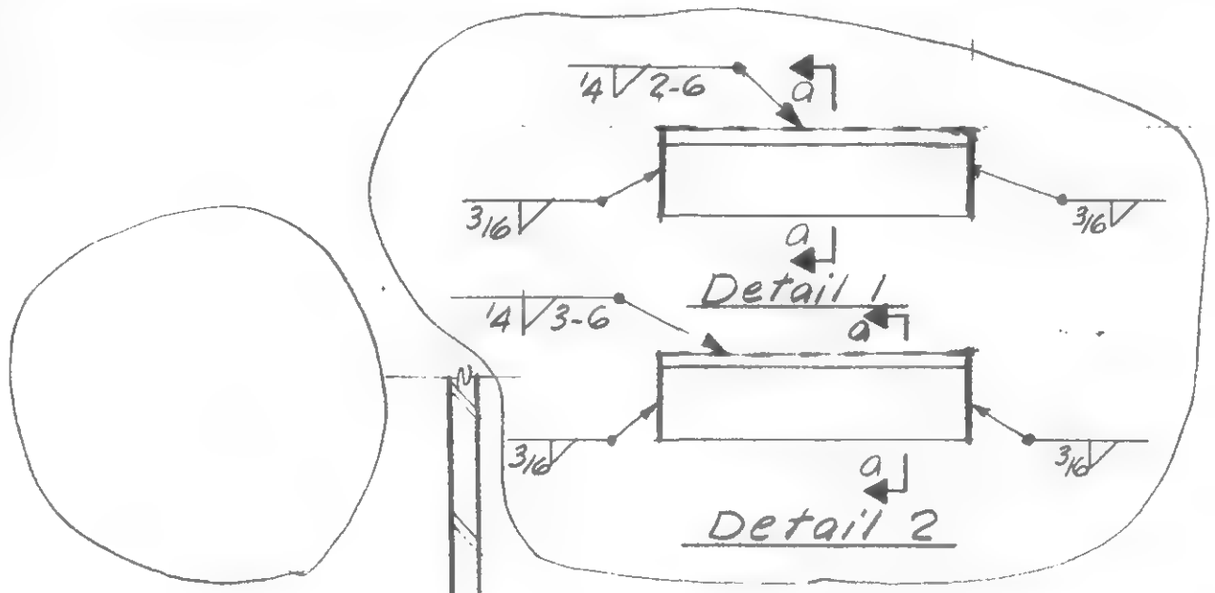

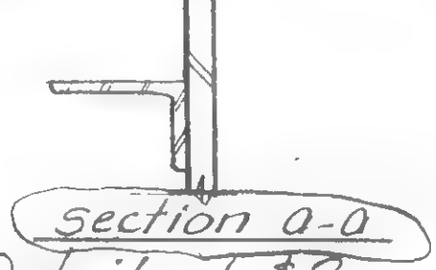

Detail 1 & 2

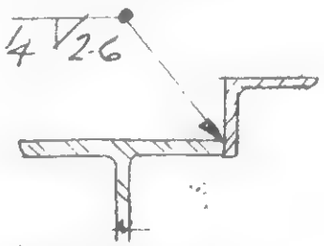

Detail 3

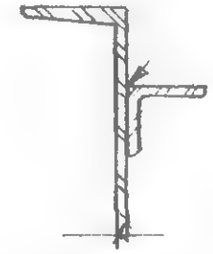

Detail 4

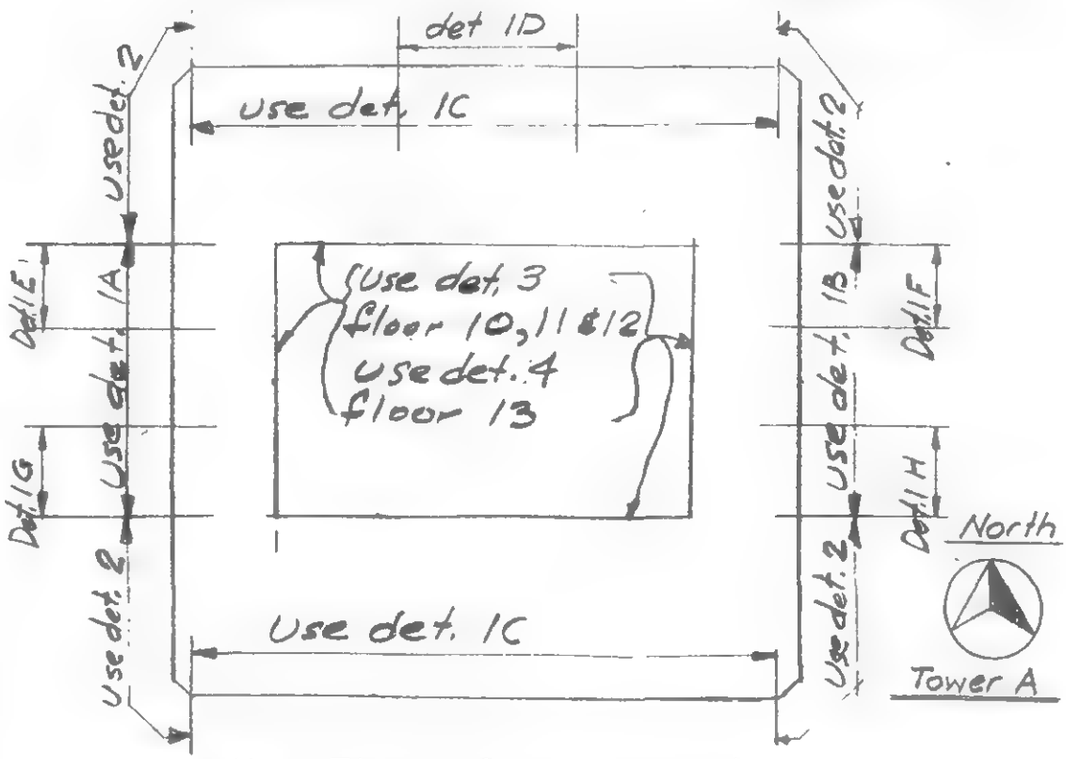

Key Plan - See Schedule

SCHEDULE OF FLOORS

DETAIL	TOWER A	TOWER B
1A, 1B, 1C, 2	—	9
1A, 1B, 1C, 2, 3	—	10 - 12
1A, 1B, 1C, 2, 4	—	13
1A, 1B, 1C, 2	—	41 - 43
1A, 1B, 1D	—	44
1B, 1D, 1G	—	45
1G, 1H	—	46 - 49
1A, 1B, 1C, 2	75 - 77	75 - 77
1A, 1B	78	78
1B, 1E	79	79
1E, 1F	80 - 83	80 - 83
1A, 1B, 1C, 2	107	107

DESIGNED

DRAWN

REVIEWED

19-AB-962

SKILLING, HELLE, CHRISTIANSEN, ROBERTSON — Structural & Civil Engineers

PROJECT THE WORLD TRADE CENTER | TITLE MODIFICATION TO BEAM OPENINGS | DATE 4/28/70

REVISIONS

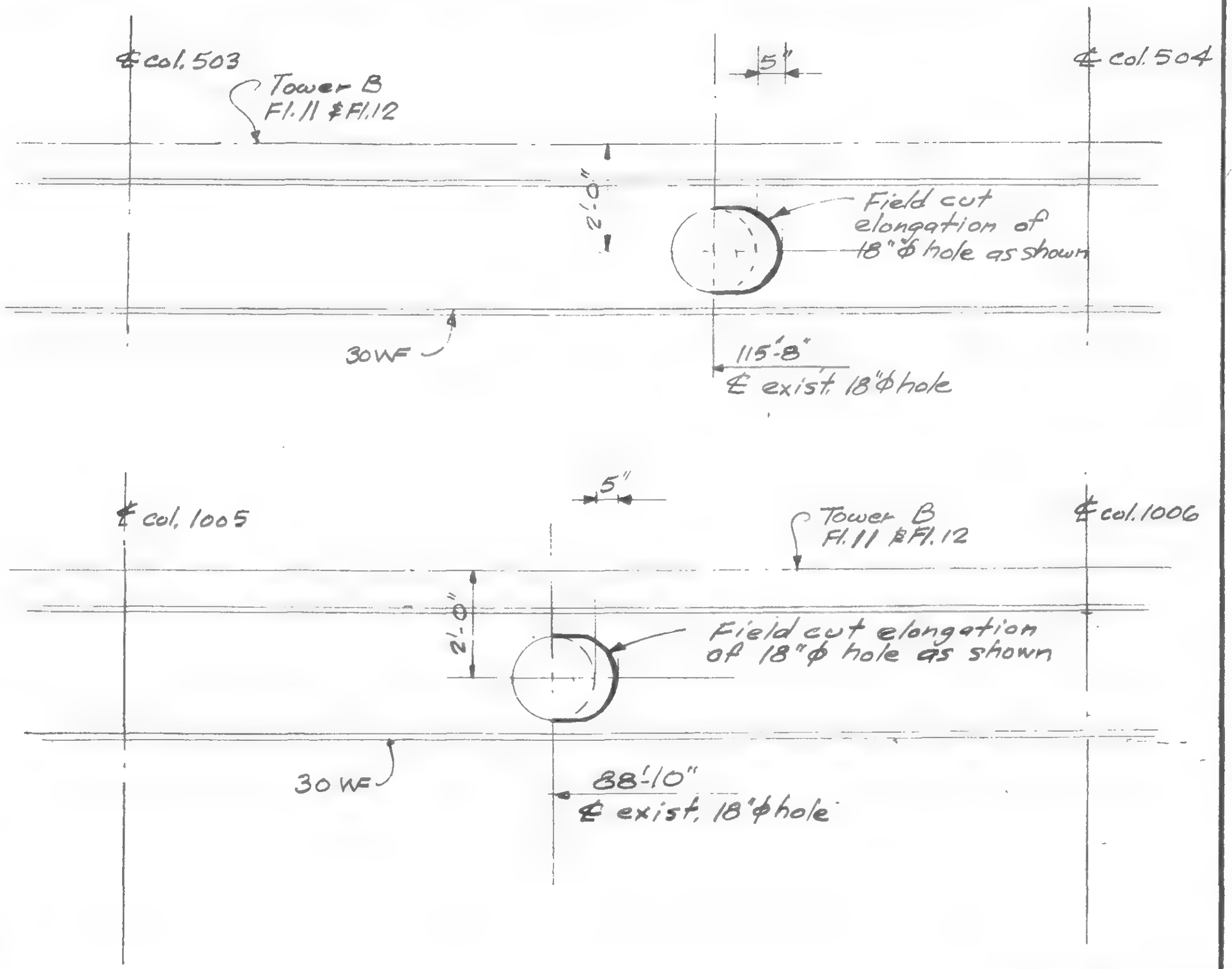

DESIGNED

DRAWN

REVIEWED

19-B-965

SKILLING, HELLE, CHRISTIANSEN, ROBERTSON — Structural & Civil Engineers

PROJECT THE WORLD TRADE CENTER | TITLE FLOOR TRUSS DETAIL 10B - REPAIR | DATE 5/11/70

REVISIONS

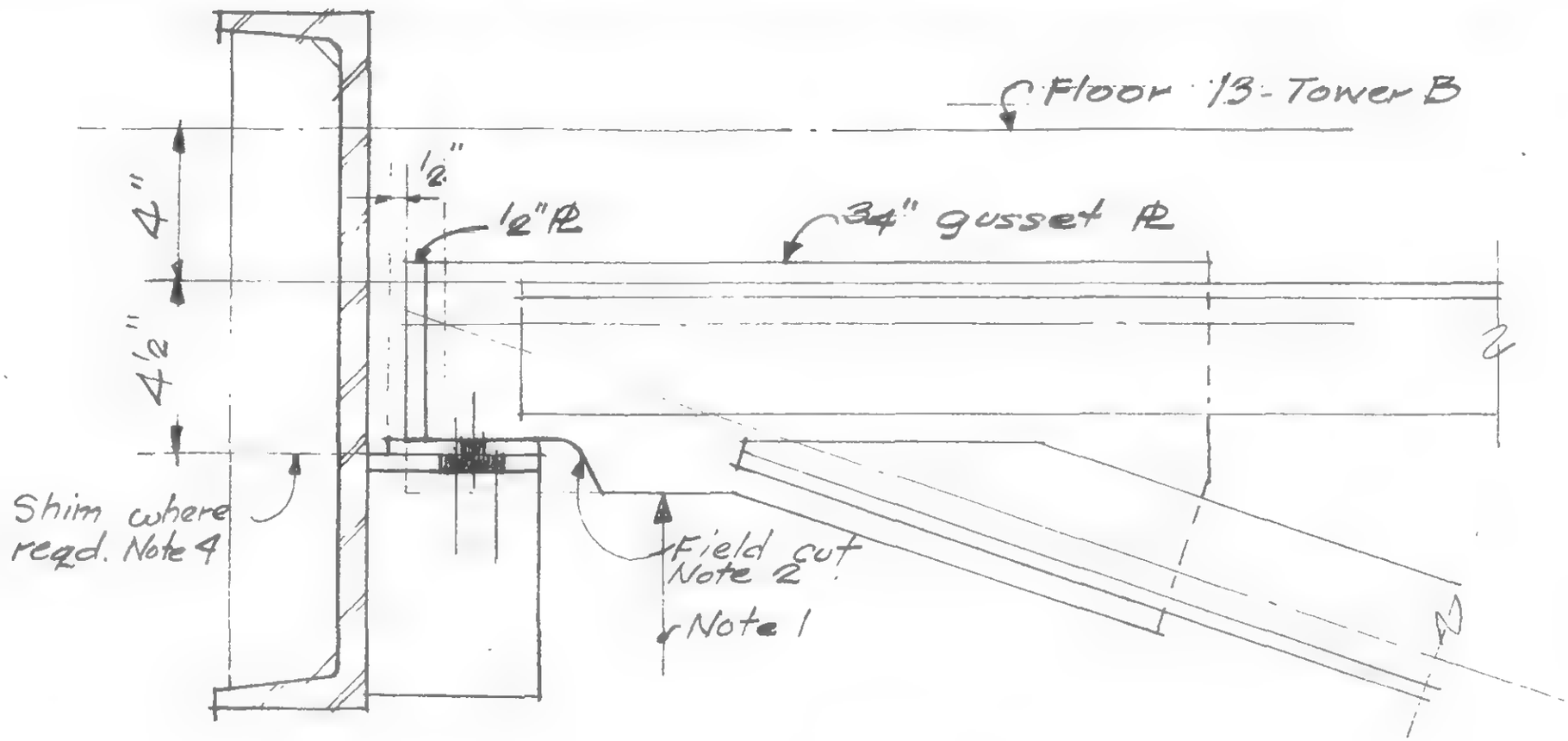

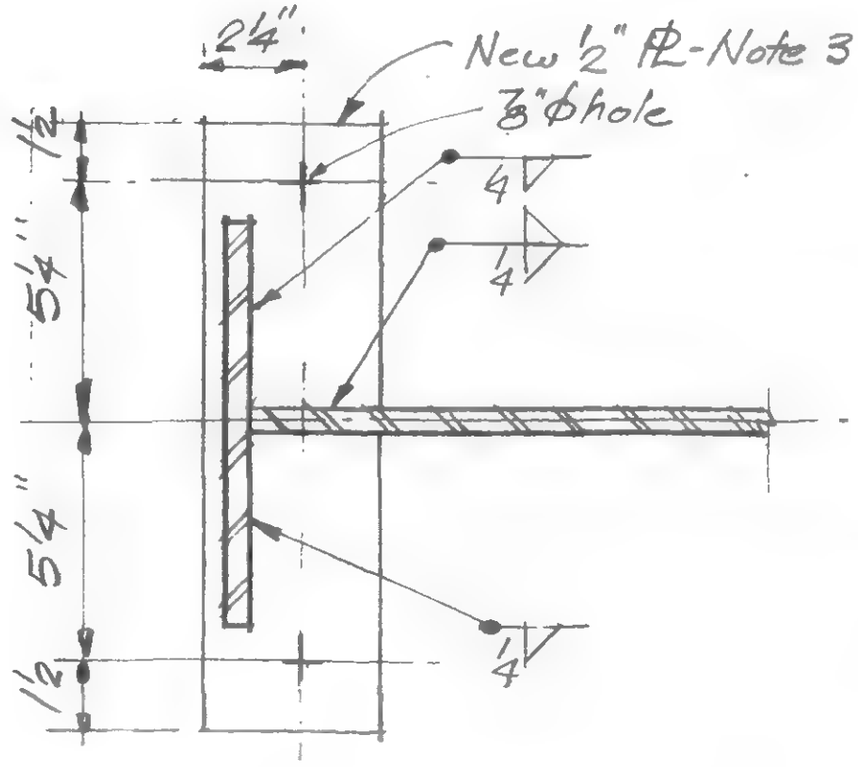

1. Shore truss for 5 kips.
2. Cut ¾" gusset PL of truss and ½" end PL of truss as shown.
3. Provide new ½" PL and weld as shown.
4. Provide shim stock as required.
5. Lower truss end 1½".

Ref. dwg. 7-88-10.8

19-B-966

LICENSED PROFESSIONAL ENGINEER — LESLIE E. ROBERTSON — No. 34960 — UNIVERSITY OF THE STATE OF NEW YORK

DESIGNED

DRAWN

REVIEWED

SKILLING, HELLE, CHRISTIANSEN, ROBERTSON — Structural & Civil Engineers

PROJECT THE WORLD TRADE CENTER | TITLE FL. 107 BEAM SEAT REINFORCING | DATE 6-17-70

REVISIONS

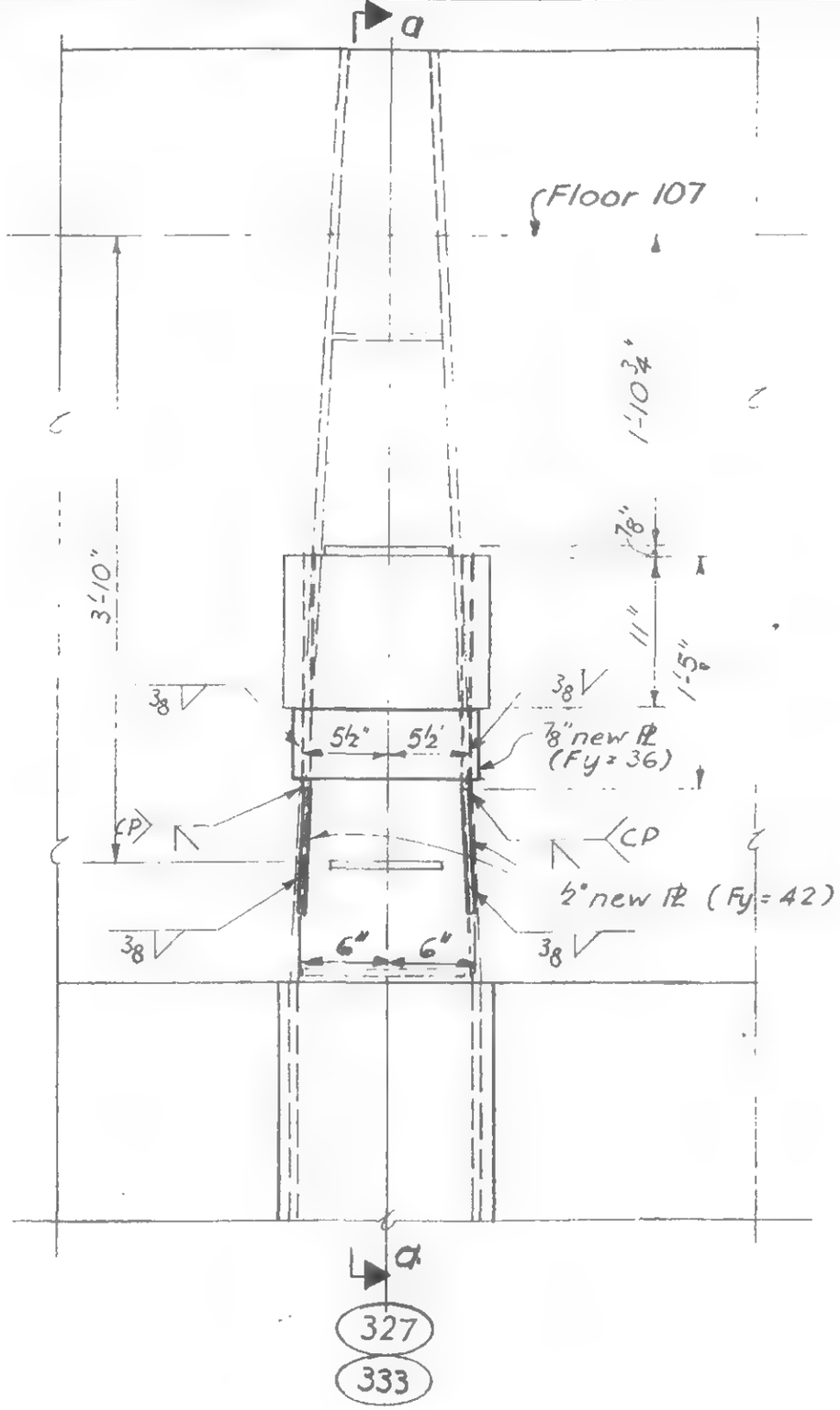

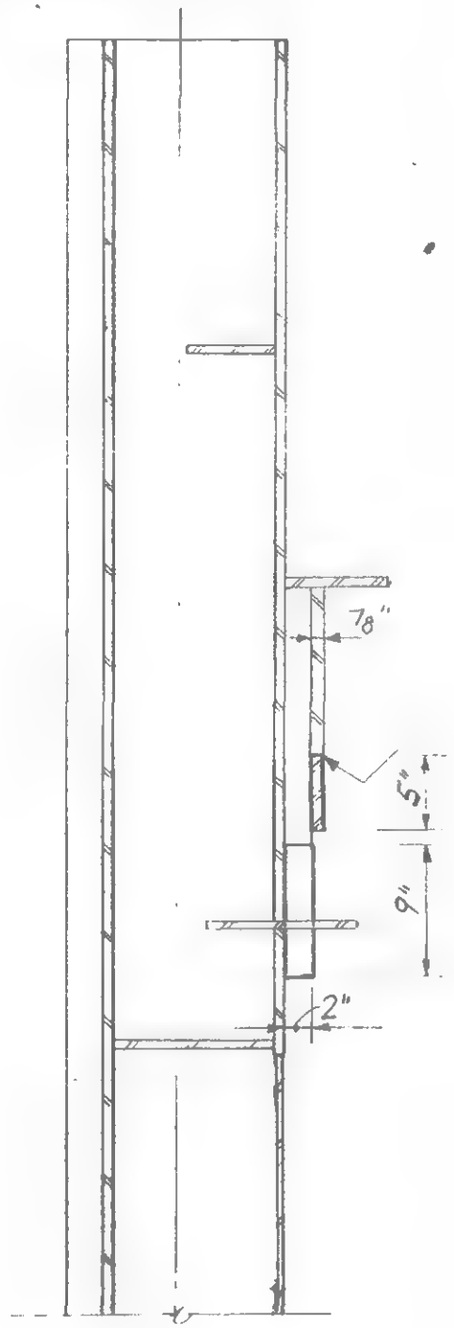

Section a-a

Beam Seat Reinforcing
Floor 107, Tower A
Columns 327, 333

LICENSED PROFESSIONAL ENGINEER
LESLIE E. ROBERTSON
NO. 24360
UNIVERSITY OF THE STATE OF NEW YORK

DESIGNED

DRAWN F. Smith

CHECKED

19-A-967

SKILLING, HELLE, CHRISTIANSEN, ROBERTSON — Structural & Civil Engineers

PROJECT THE WORLD TRADE CENTER | TITLE BEAM SEAT REPAIR - FL. 107 - TOWER B | DATE 8-3-70

REVISIONS

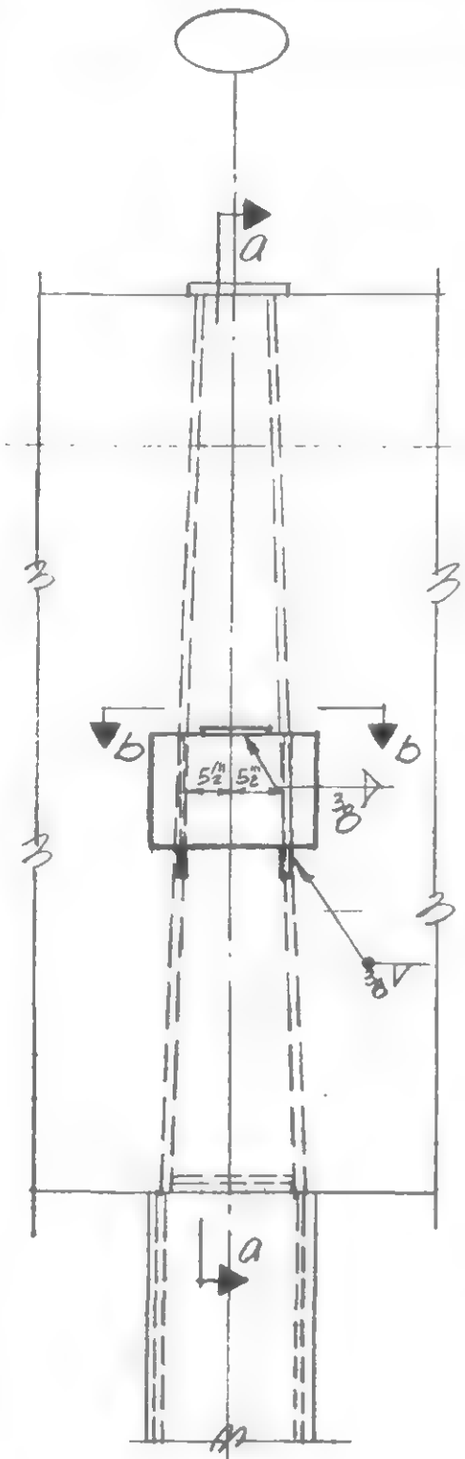

Elevation
Col. 212 & 412

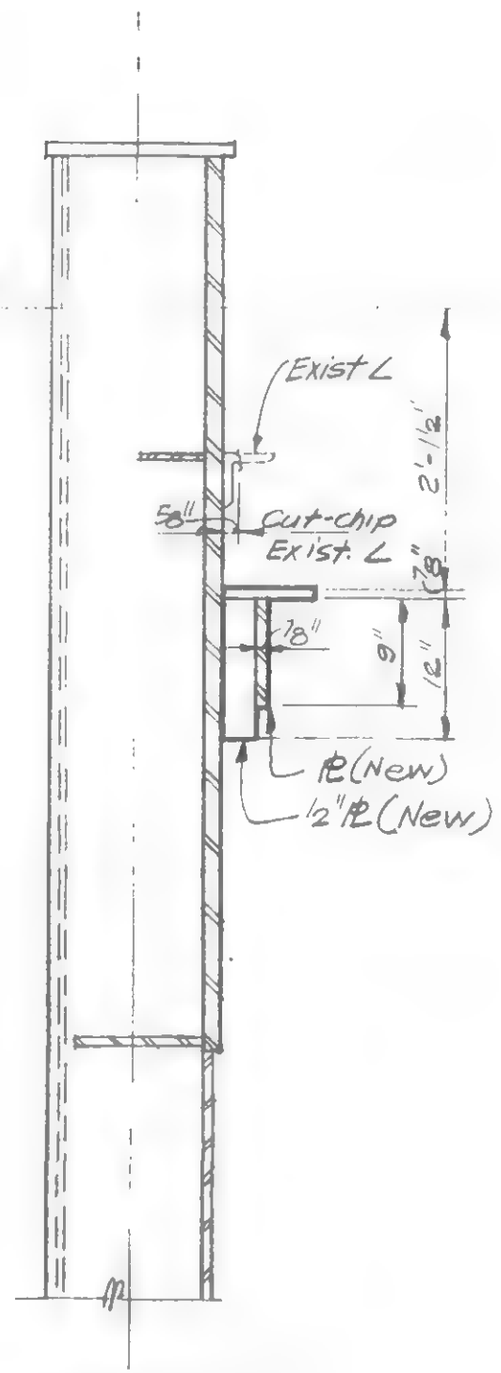

Section a-a

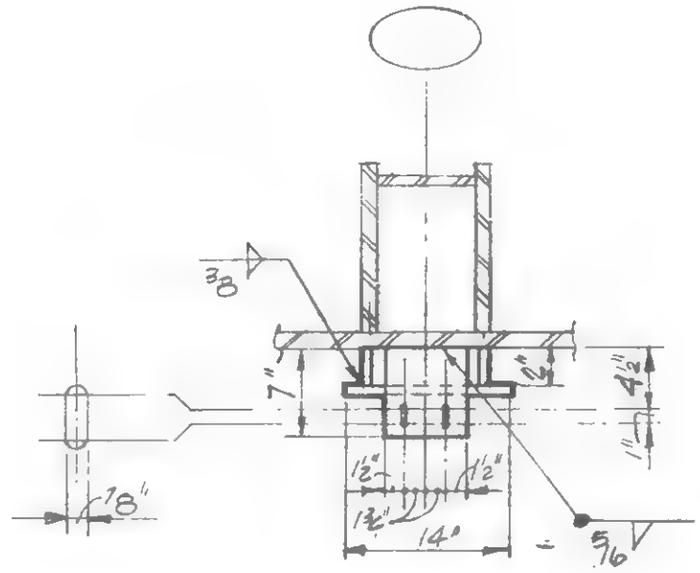

Section b-b

LICENSED PROFESSIONAL ENGINEER
LESLIE E. ROBERTSON
NO 34960
UNIVERSITY OF THE STATE OF NEW YORK

DESIGNED

DRAWN P. Orchi

REVIEWED

19-B-968

SKILLING, HELLE, CHRISTIANSEN, ROBERTSON — Structural & Civil Engineers

PROJECT: THE WORLD TRADE CENTER | TITLE: LOUVER SUPPORTS - FL. 42 | DATE: 8-7-70

REVISIONS

9-29-72

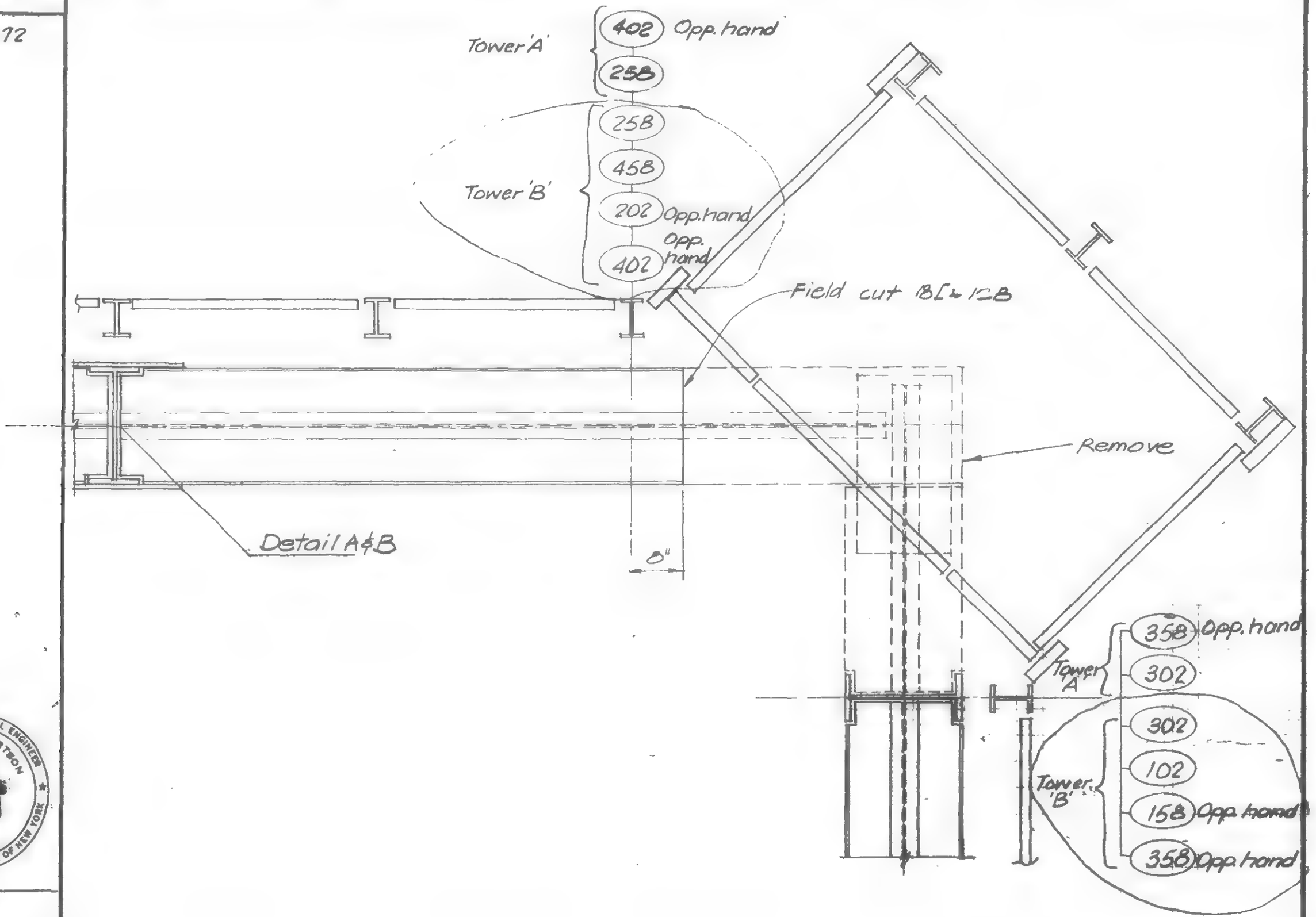

LICENSED PROFESSIONAL ENGINEER
LESLIE E. ROBERTSON
No. 34360
UNIVERSITY OF THE STATE OF NEW YORK

DESIGNED

DRAWN P. Orelli

REVIEWED

19 AB 969.1

SKILLING, HELLE, CHRISTIANSEN, ROBERTSON — Structural & Civil Engineers

PROJECT THE WORLD TRADE CENTER | TITLE LOWER SUPPORTS - FL. 43 | DATE 8-7-70

REVISIONS

9-29-72

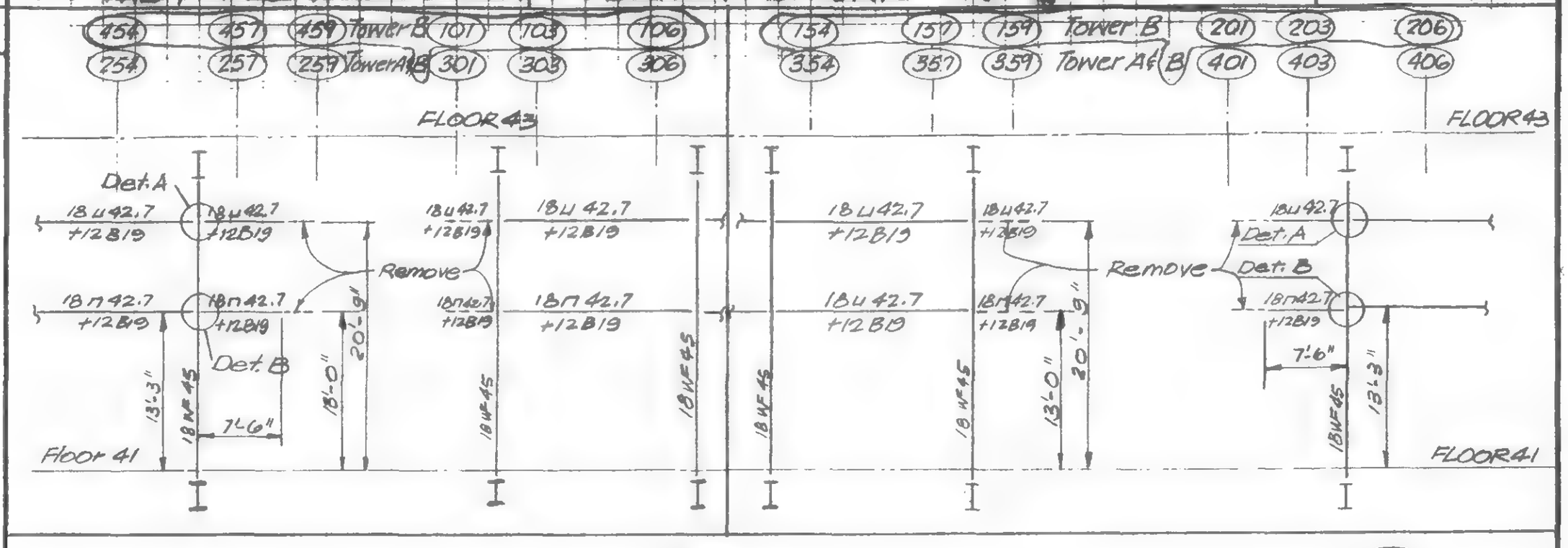

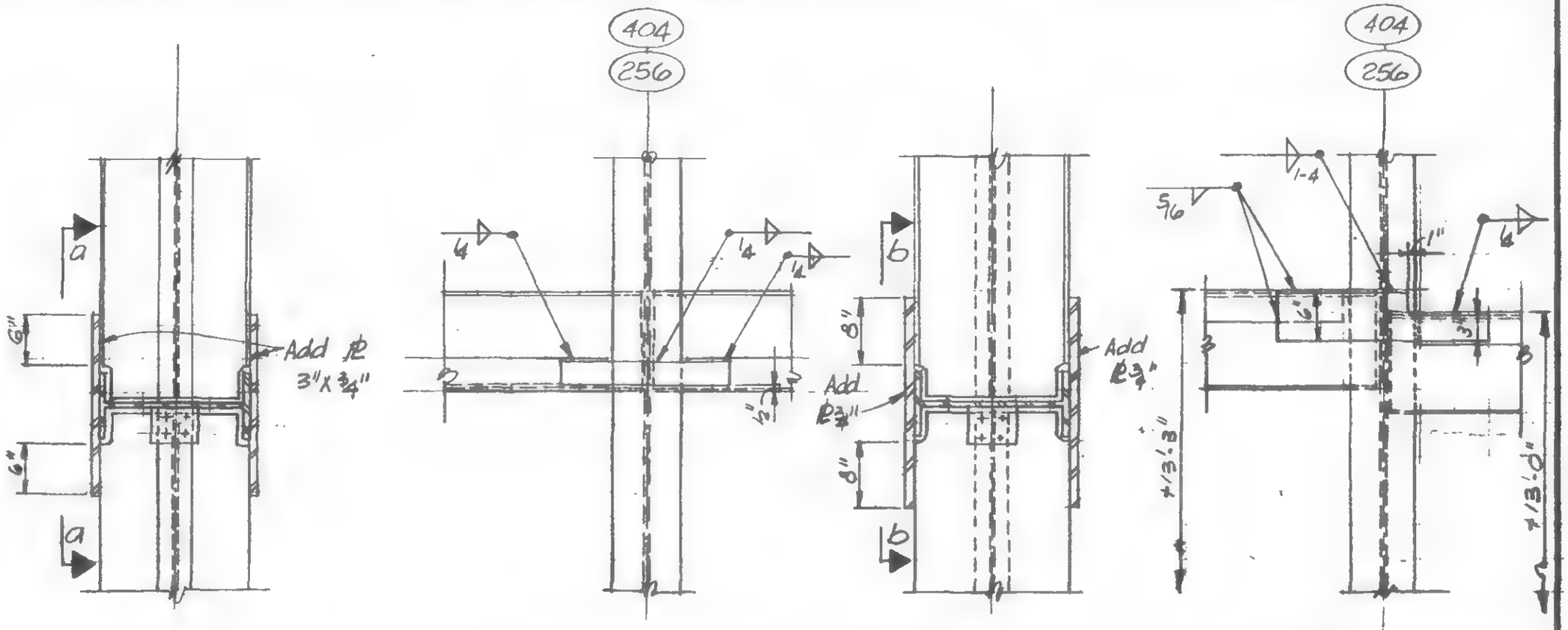

Detail A

Section a-a

Detail B

Section b-b

LICENSED PROFESSIONAL ENGINEER — LESLIE E. ROBERTSON — No. 34360 — UNIVERSITY OF THE STATE OF NEW YORK

DESIGNED

DRAWN P. Oreki

REVIEWED

19-AB969.2

SKILLING, HELLE, CHRISTIANSEN, ROBERTSON — Structural & Civil Engineers

PROJECT THE WORLD TRADE CENTER | TITLE REPAIR OPENING FLOOR 7 - TOWER A - ALT.#1 | DATE 8-7-70

REVISIONS

Procedure: (or more if req'd.)

1. Remove 7" of slab along the dotted lines with rough surface to expose the existing bars 6" min.
2. Provide #6 short bars spanning btw. existing opposite reinf. on each side of opng. (Field measure lenght of each bar)
3. Splice all Top, bottom & diag. bars as shown with T-series Caldweld splice.
4. Fill opng. with non-shrinkage concrete (f'c = 4000psi, same thickness as slab.
5. Reroute duct thru old existing opng.

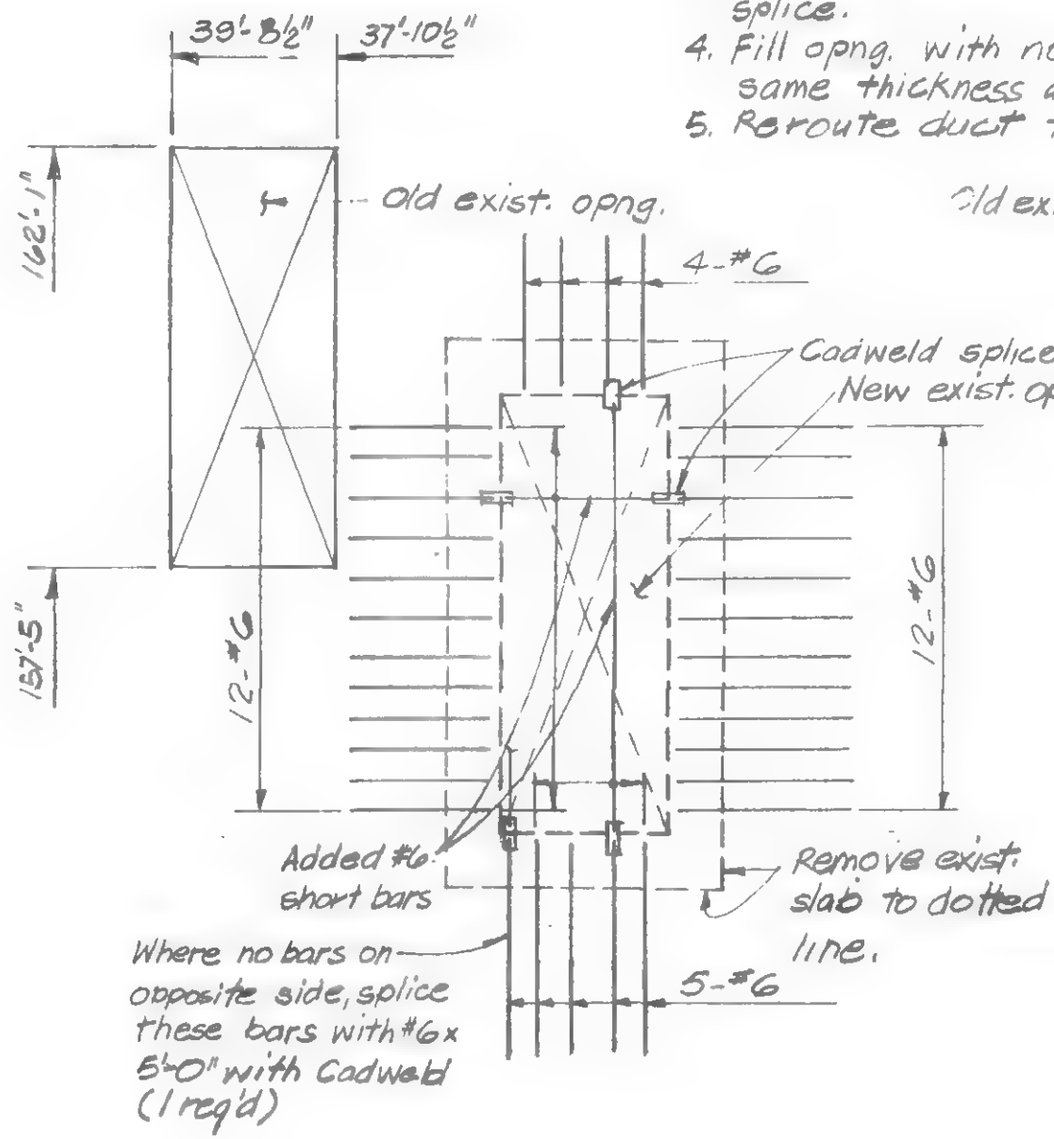

Top bars

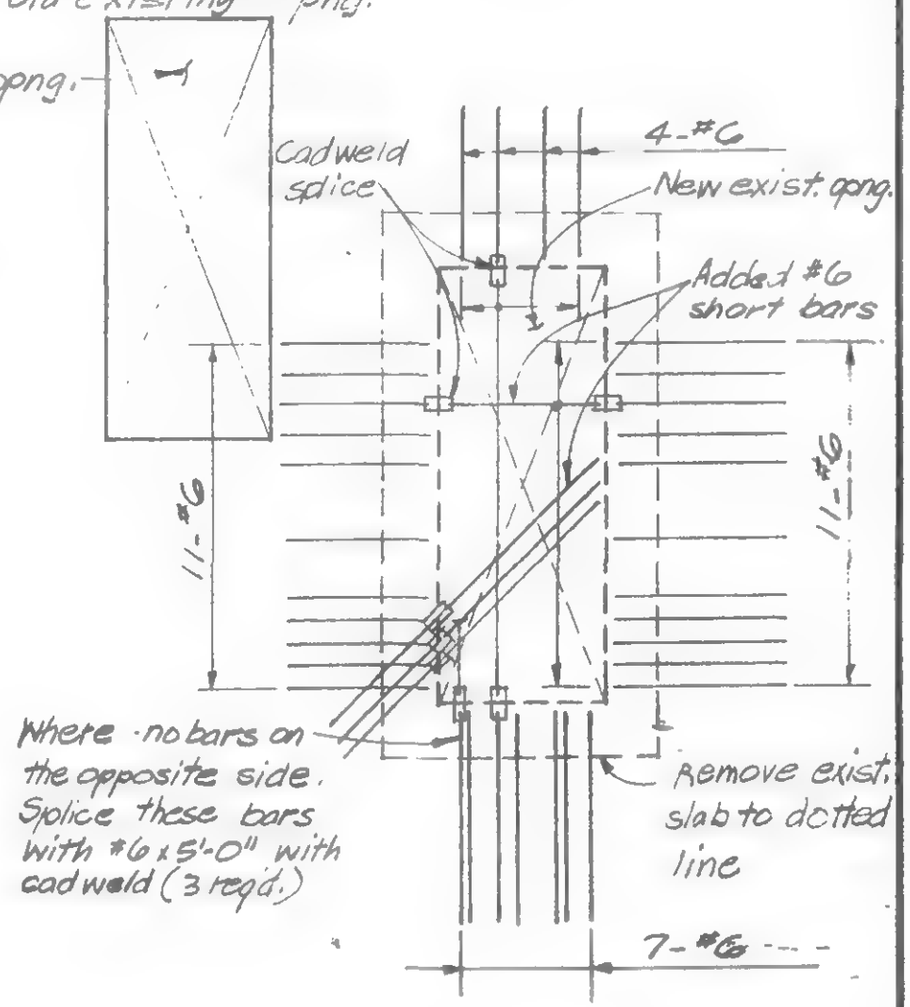

Bottom bars

LICENSED PROFESSIONAL ENGINEER — LESLIE E. ROBERTSON — No. 34360 — UNIVERSITY OF THE STATE OF NEW YORK

DESIGNED

DRAWN A. FRANQUI

REVIEWED

19-A-970.1

SKILLING, HELLE, CHRISTIANSEN, ROBERTSON — Structural & Civil Engineers

PROJECT: THE WORLD TRADE CENTER | TITLE: REPAIR OPENING FLOOR 7 - TOWER A - ALT.#2 | DATE: 8-7-10

REVISIONS

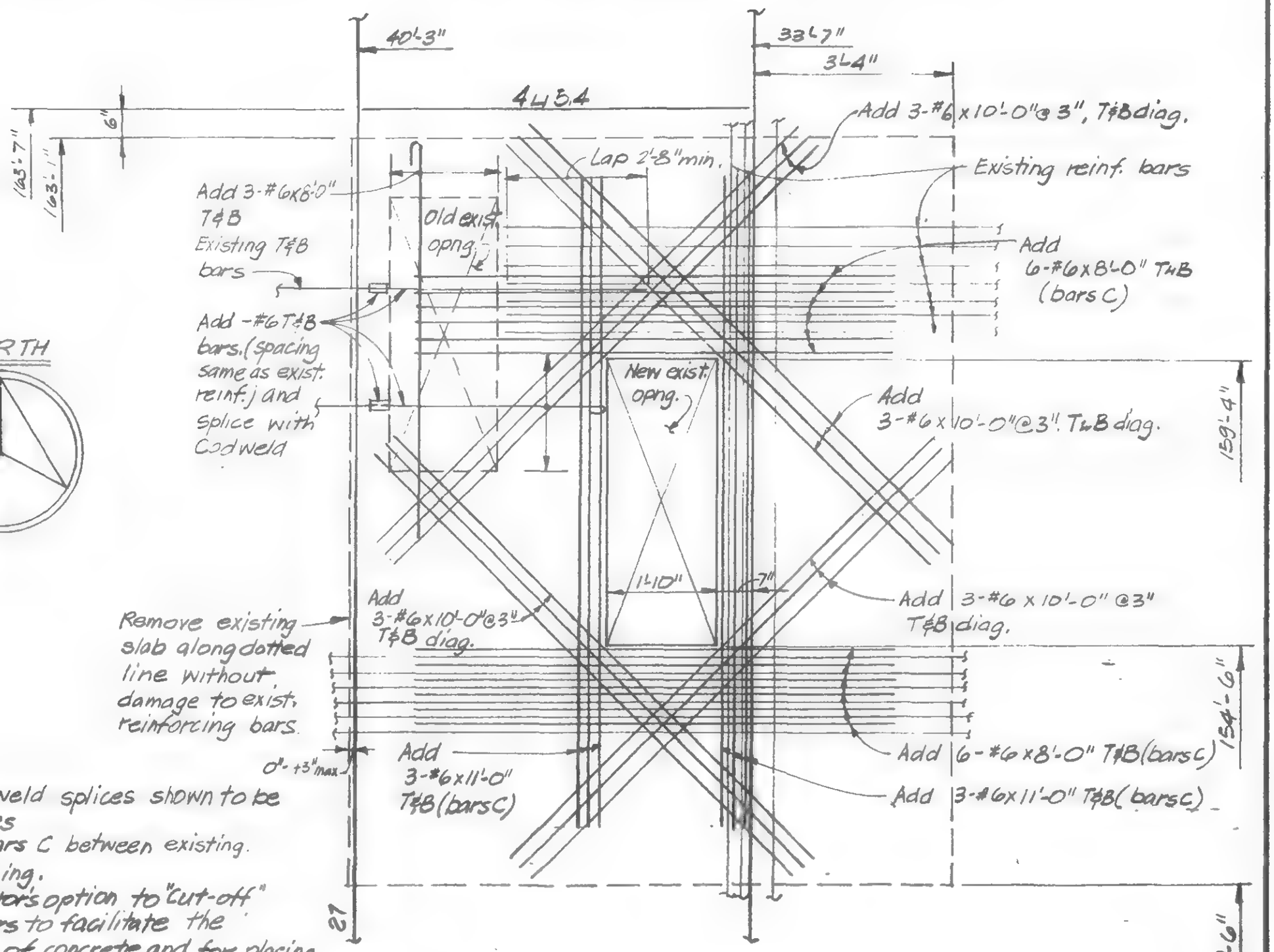

Notes:

1. All Cadweld splices shown to be T-series
2. Place bars C between existing reinforcing.
3. Contractors option to "cut-off" other bars to facilitate the removing of concrete and for placing of reinforcing however bars must be replaced and connected by Cadweld splices.
4. All concrete to be non-shrinkage with $f'_c = 4000$ psi

LICENSED PROFESSIONAL ENGINEER — LESLIE E. ROBERTSON — No. 34360 — UNIVERSITY OF THE STATE OF NEW YORK

DESIGNED

DRAWN P. Orlic

REVIEWED

19-A-970.2

SKILLING, HELLE, CHRISTIANSEN, ROBERTSON — Structural & Civil Engineers

PROJECT: THE WORLD TRADE CENTER | TITLE: REPAIR TO SEPERATOR BEAM. COL. 1003-FL. 44&45 | DATE: 9/26/70

REVISIONS
9/25/70

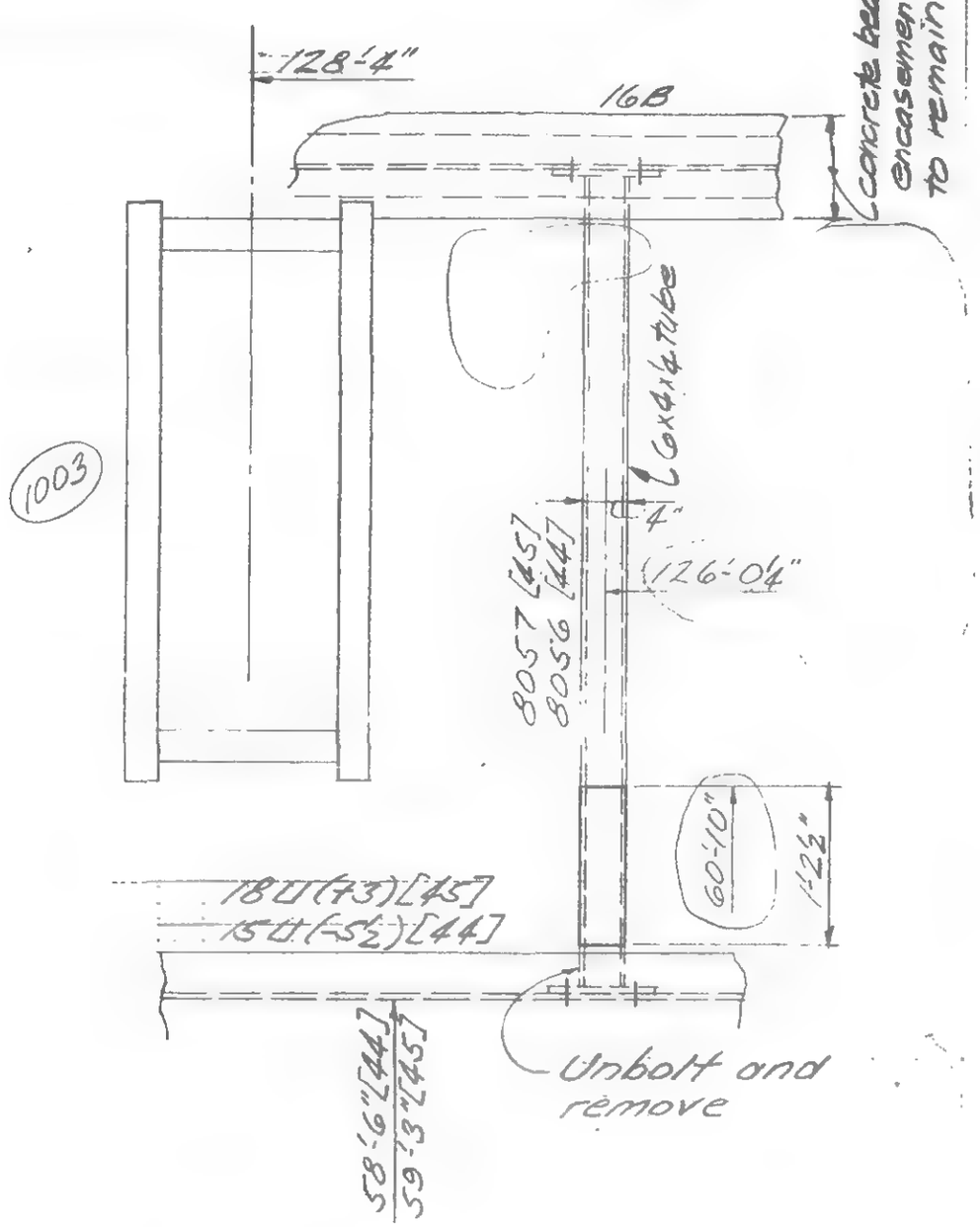

Existing Port Plan
Floors 44 & 45

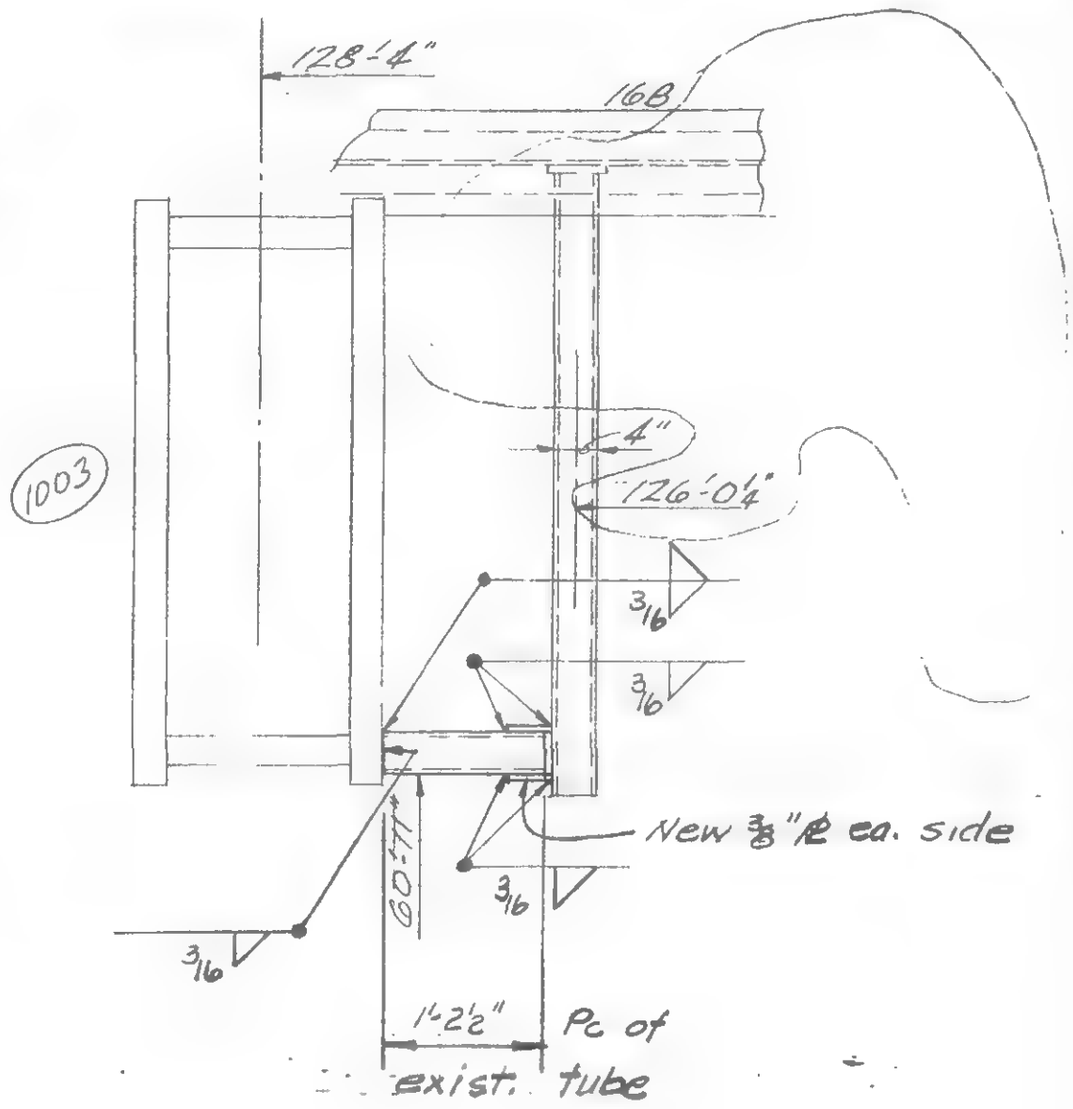

Revised Port Plan

To accomodate Elevator as detailed on Otis Elevator Co. Dwg. No. 347308-PN dated 6-27-70

LICENSED PROFESSIONAL ENGINEER
LESLIE E. ROBERTSON
NO. 34360
UNIVERSITY OF THE STATE OF NEW YORK

DESIGNED

DRAWN
J. Hdam

REVIEWED

19-A-971

SKILLING, HELLE, CHRISTIANSEN, ROBERTSON — Structural & Civil Engineers

PROJECT: THE WORLD TRADE CENTER | TITLE: NEW OPENING FLOOR 77 - TOWER A | DATE: 8-25-70

REVISIONS

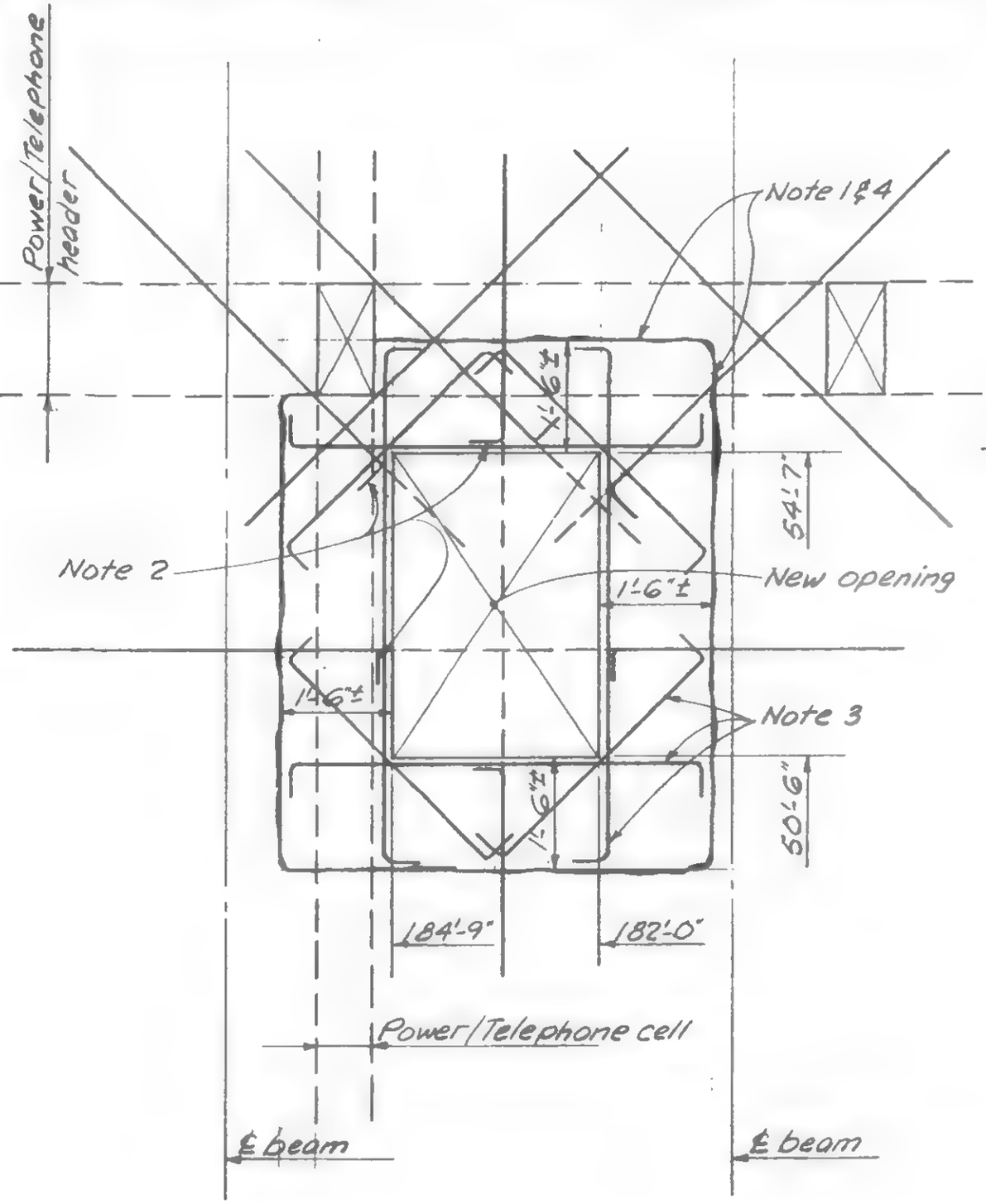

NORTH

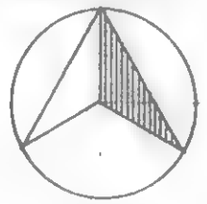

Notes

1. Remove concrete to line indicated without damaging existing reinforcing steel or Power/Telephone header or cell.
2. Hook all existing reinforcing steel at new opening.
3. Add 2-#5 each side and each corner, hook each end.
4. Coat face of concrete with approved epoxy bonding compound and cast slab to opening dimensions shown, with non shrink f'c = 3000 psi stone aggregate concrete.

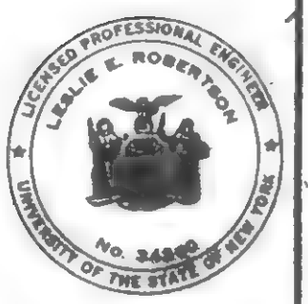

DESIGNED

DRAWN A. FRANQUI

REVIEWED

19-A-972

SKILLING, HELLE, CHRISTIANSEN, ROBERTSON — Structural & Civil Engineers

PROJECT THE WORLD TRADE CENTER | TITLE DETAIL AT HEADER DUCTS - FL. 44 | DATE 9-28-70

REVISIONS

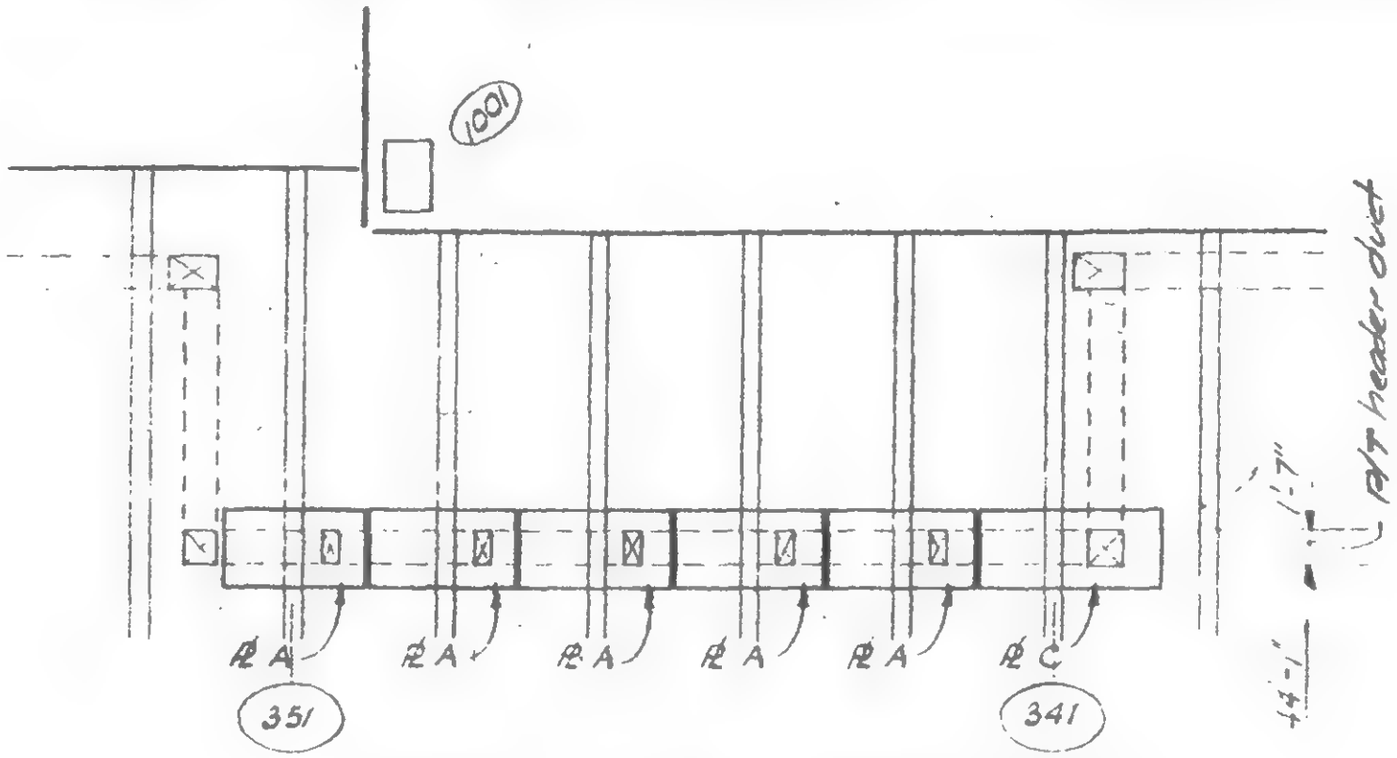

NORTH

Part Plan SE Fl. 44 Tower B

See 19-5-973.2 for details of ℄ A thru D

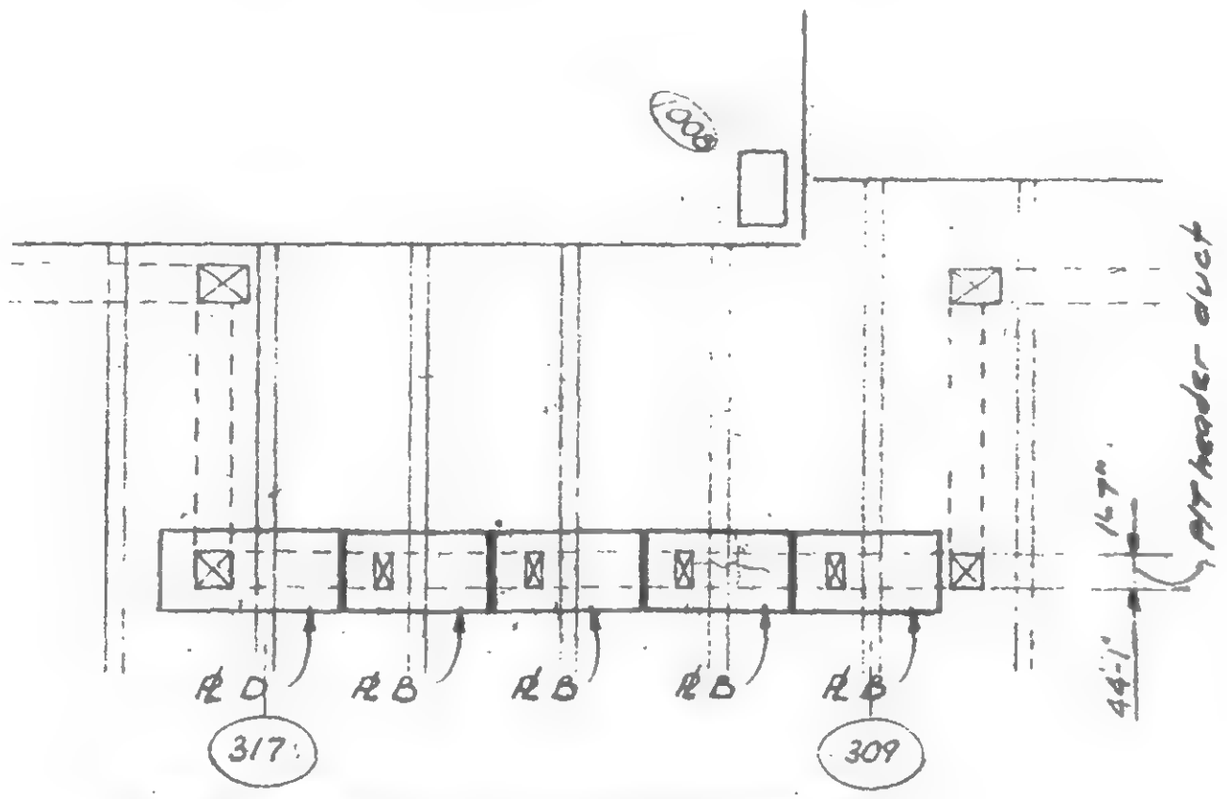

Part Plan NE Fl. 44 Tower B

LICENSED PROFESSIONAL ENGINEER — LESLIE E. ROBERTSON — No 34360 — UNIVERSITY OF THE STATE OF NEW YORK

SIGNED

DRAWN D. Huggins

REVIEWED

19-5-972.1

SKILLING, HELLE, CHRISTIANSEN, ROBERTSON — Structural & Civil Engineers

PROJECT THE WORLD TRADE CENTER | TITLE DETAILS AT HEADER DUCTS - FL. 44 | DATE 9-28-70

REVISIONS

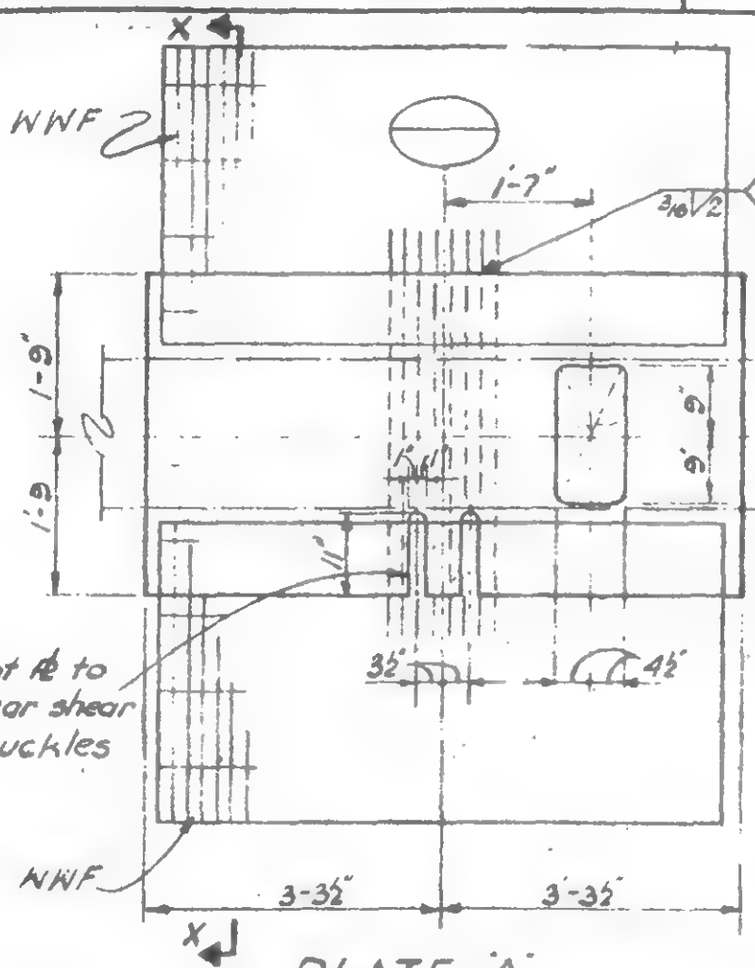

PLATE 'A'
PLATE 'B' opp. hand

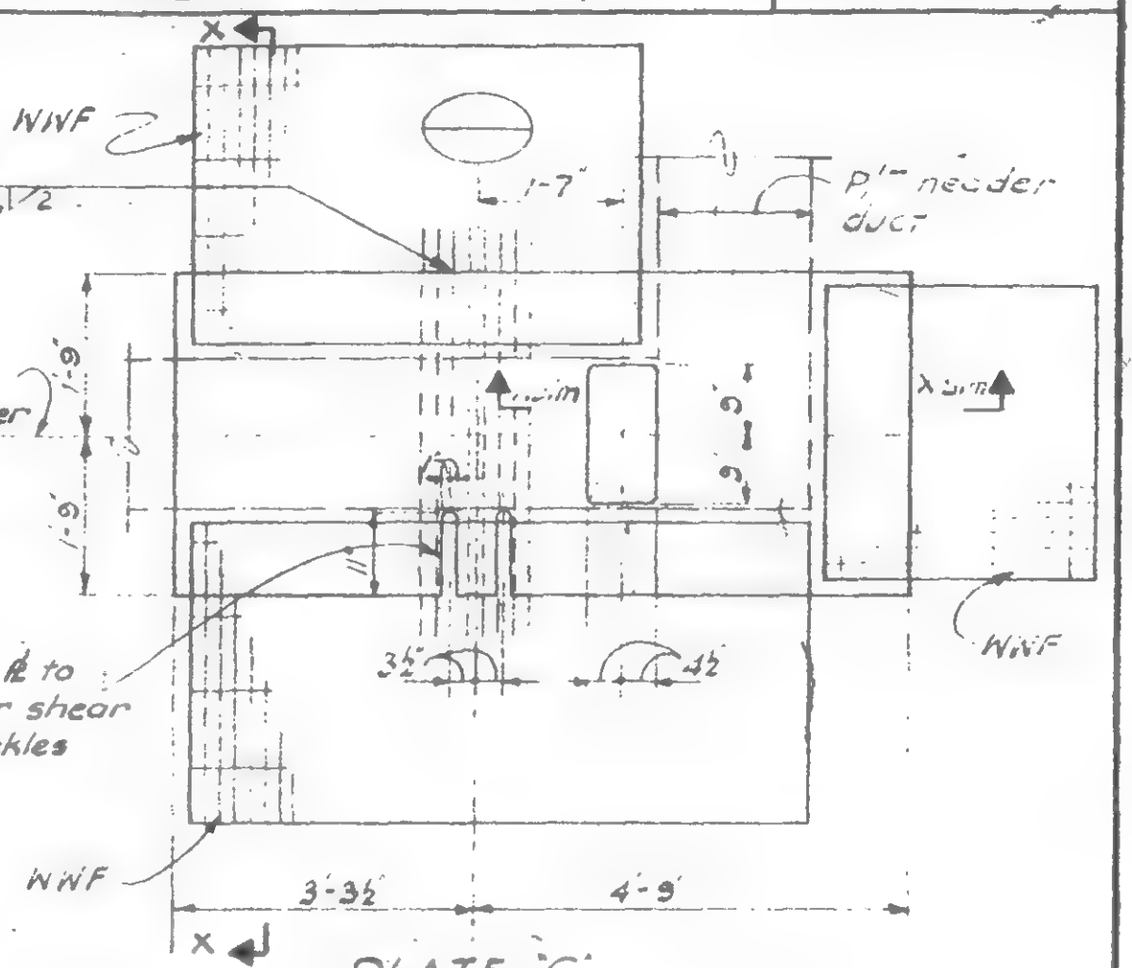

PLATE 'C'
PLATE 'D' opp. hand

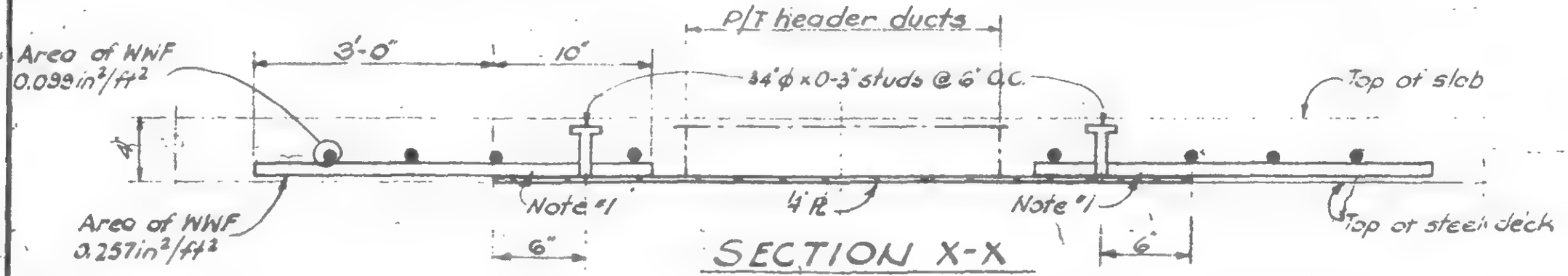

SECTION X-X

Note:
1. Weld each wire to develop tensile strength of WNF. Welding procedure to be qualified and submitted to the Engineer for approval.

LICENSED PROFESSIONAL ENGINEER — LESLIE E. ROBERTSON — No. 34360 — UNIVERSITY OF THE STATE OF NEW YORK

SIGNED

DRAWN D. Huggins

REVIEWED

19-B-973.2

SKILLING, HELLE, CHRISTIANSEN, ROBERTSON — Structural & Civil Engineers

PROJECT: THE WORLD TRADE CENTER | TITLE: CORE COLUMN REINFORCING FL. 98-106 | DATE: 12-1-71

REVISIONS

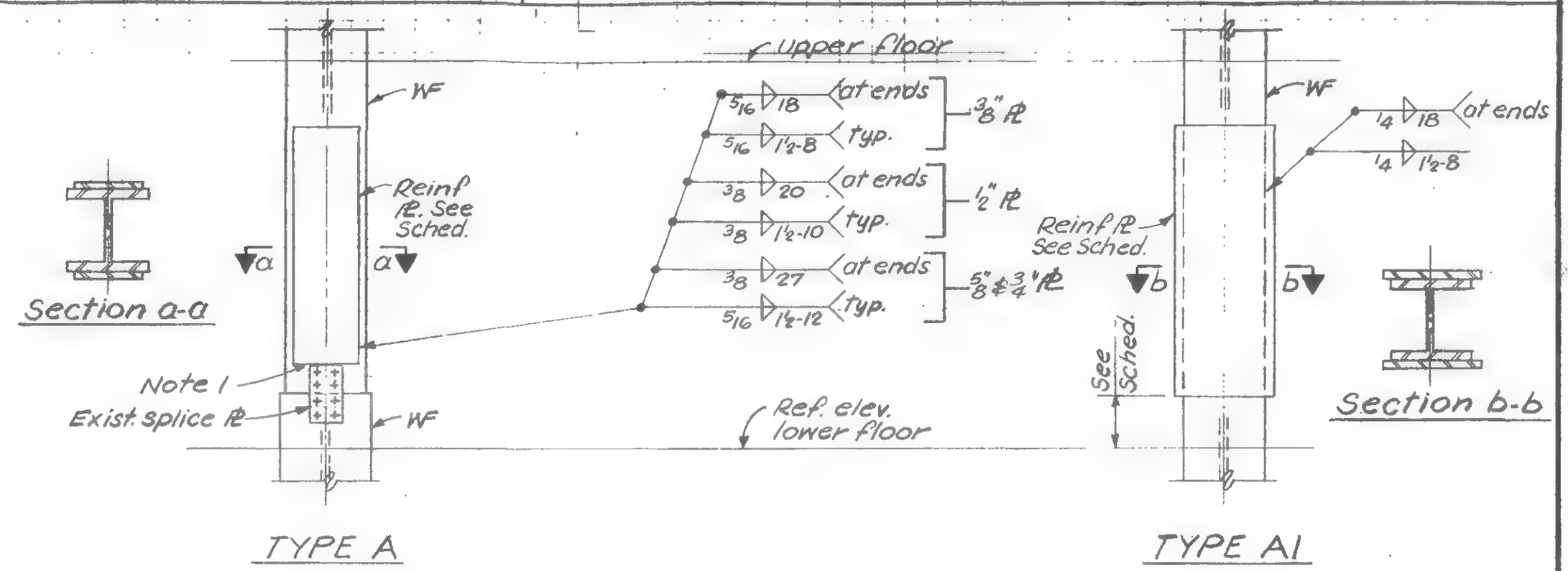

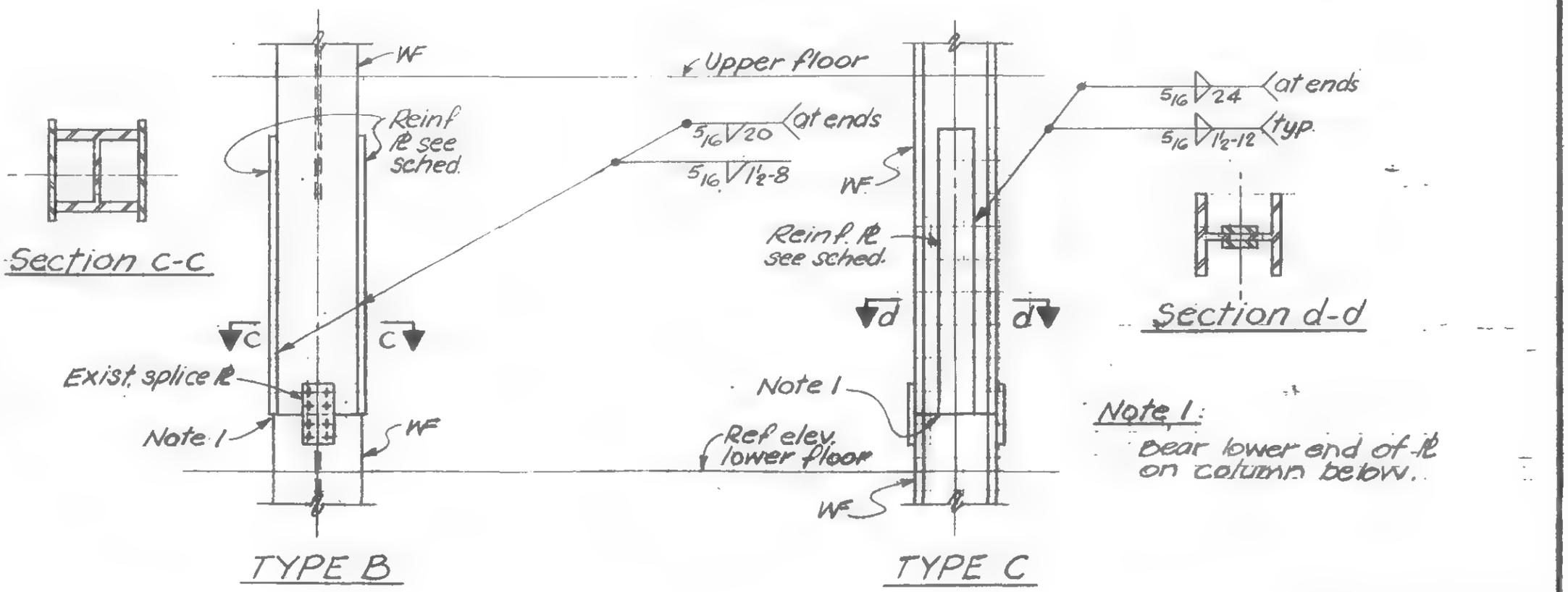

LICENSED PROFESSIONAL ENGINEER — LESLIE E. ROBERTSON — No. 34360 — UNIVERSITY OF THE STATE OF NEW YORK

DESIGNED

DRAWN S.C.

REVIEWED H.R.

19-AB-974.2

SKILLING, HELLE, CHRISTIANSEN, ROBERTSON — Structural & Civil Engineers

PROJECT: THE WORLD TRADE CENTER | TITLE: CORE COLUMN REINFORCING : FL. 98-106 | DATE: 12-1-71

REVISIONS

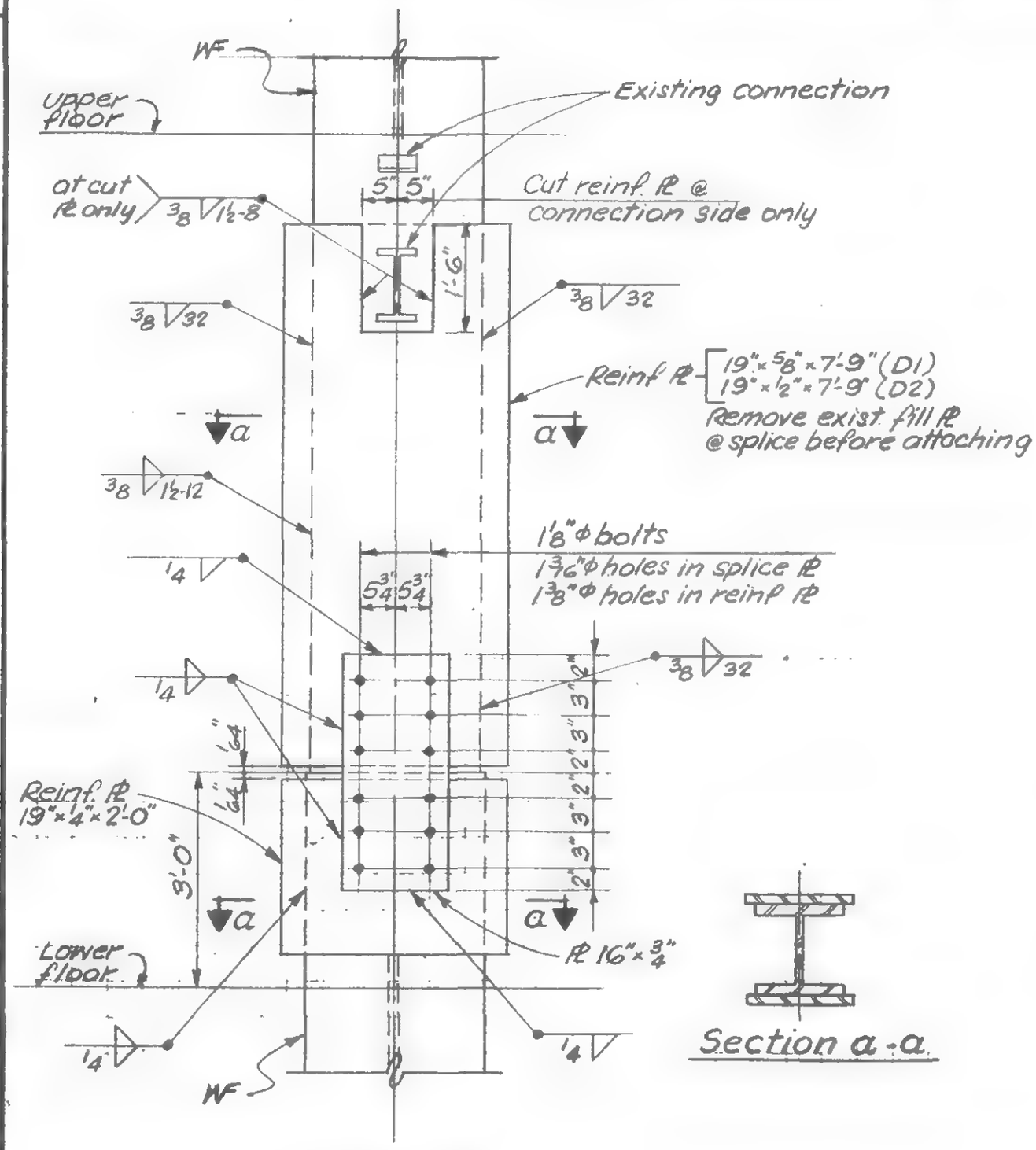

TYPE D1
TYPE D2

Section a-a

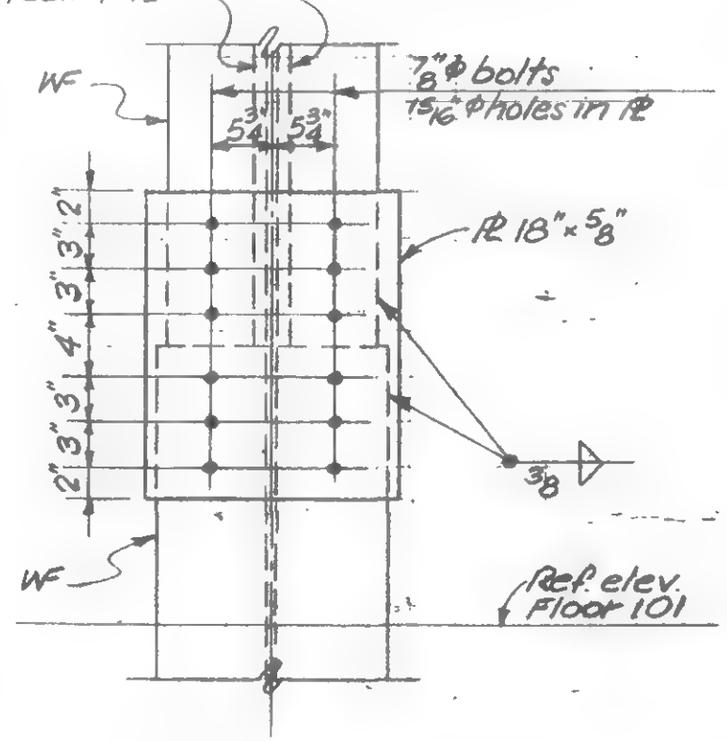

TYPE F

LICENSED PROFESSIONAL ENGINEER — LESLIE E. ROBERTSON — No. 34360 — UNIVERSITY OF THE STATE OF NEW YORK

DESIGNED

DRAWN S.C.

REVIEWED H.R.

19-AB-974.3

SKILLING, HELLE, CHRISTIANSEN, ROBERTSON — Structural & Civil Engineers

PROJECT: THE WORLD TRADE CENTER | TITLE: CORE COLUMN REINFORCING FL. 98-106 | DATE: 12-1-71

REVISIONS

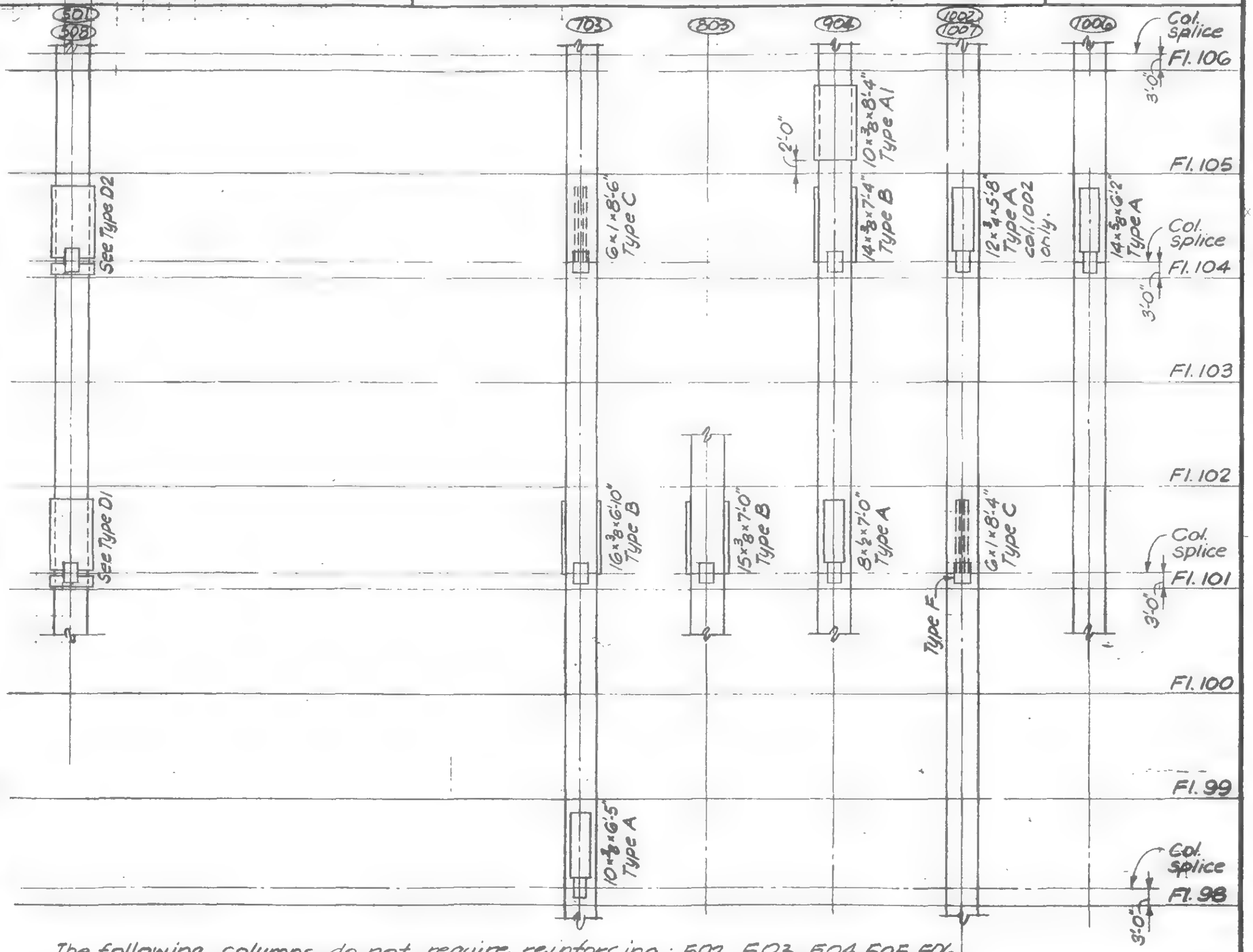

The following columns do not require reinforcing: 502, 503, 504, 505, 506, 507, 601, 602, 603, 604, 605, 606, 607, 608, 701, 702, 704, 705, 706, 707, 708, 801, 802, 804, 805, 806, 807, 901, 902, 903, 905, 906, 907, 908, 1001, 1003, 1004, 1005, 1008.

LICENSED PROFESSIONAL ENGINEER — LESLIE E. ROBERTSON — No. 34960 — UNIVERSITY OF THE STATE OF NEW YORK

DESIGNED

DRAWN: S.C.

REVIEWED: H.R.

19-AB-974.1

SKILLING, HELLE, CHRISTIANSEN, ROBERTSON — Structural & Civil Engineers

PROJECT: THE WORLD TRADE CENTER | TITLE: BEAM REPAIR DETAIL - FL 59 & 92 - TOWER B | DATE: 10-28-70

REVISIONS

℄ NUMBER	℄ SIZE		
	Width	Thickness	Length
1	4¼	5/8	5'-0"
2	5¼	3/4	5'-0"
3	3¼	3/8	1'-1"

Stiffener ℄ Schedule

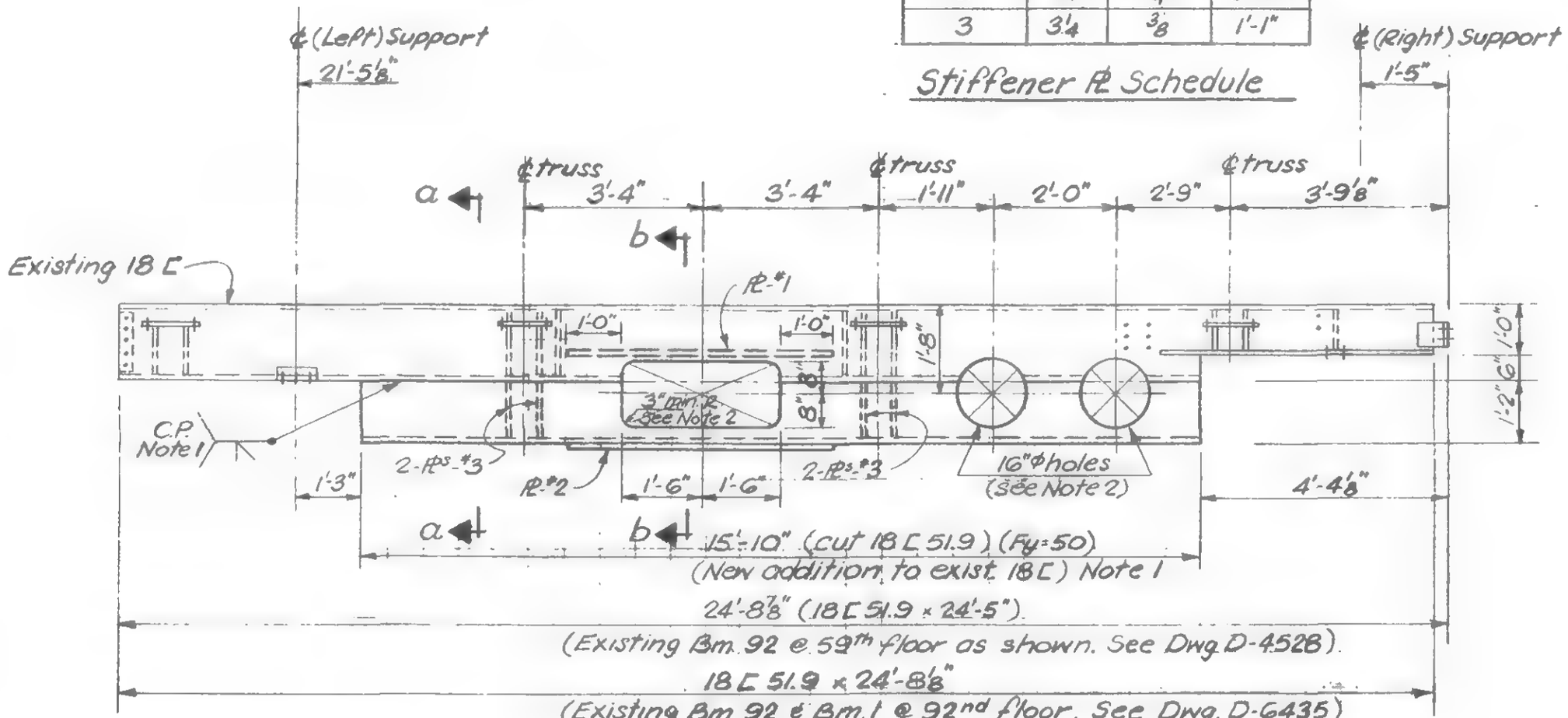

ELEVATION X-X

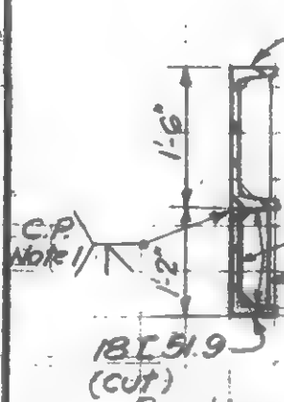

Section a-a

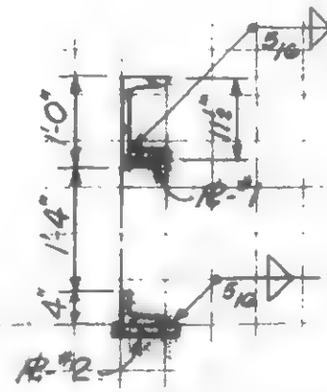

Section b-b

KEY PLAN - FL 59

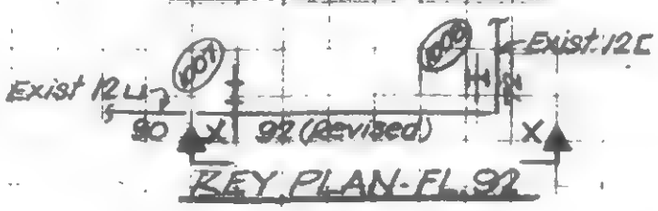

KEY PLAN - FL 92

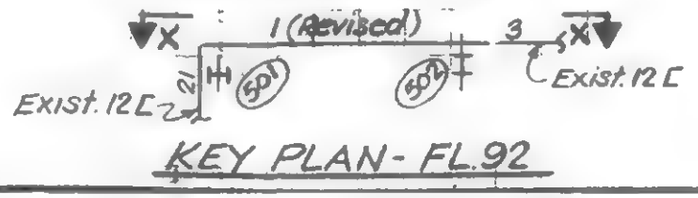

KEY PLAN - FL 92

Notes:

1. Channel assembly to be welded before openings are cut in web.
2. Cut new holes with smooth notch-free cut surface (ASA 250)

LICENSED PROFESSIONAL ENGINEER — LESLIE E. ROBERTSON — NO. 34360 — UNIVERSITY OF THE STATE OF NEW YORK

DESIGNED

DRAWN S.C.

REVIEWED

19-B-975

SKILLING, HELLE, CHRISTIANSEN, ROBERTSON — Structural & Civil Engineers

PROJECT THE WORLD TRADE CENTER | TITLE TEMPORARY TRUSS FL. 107 – 108 TOWER A | DATE 1-7-71

REVISIONS

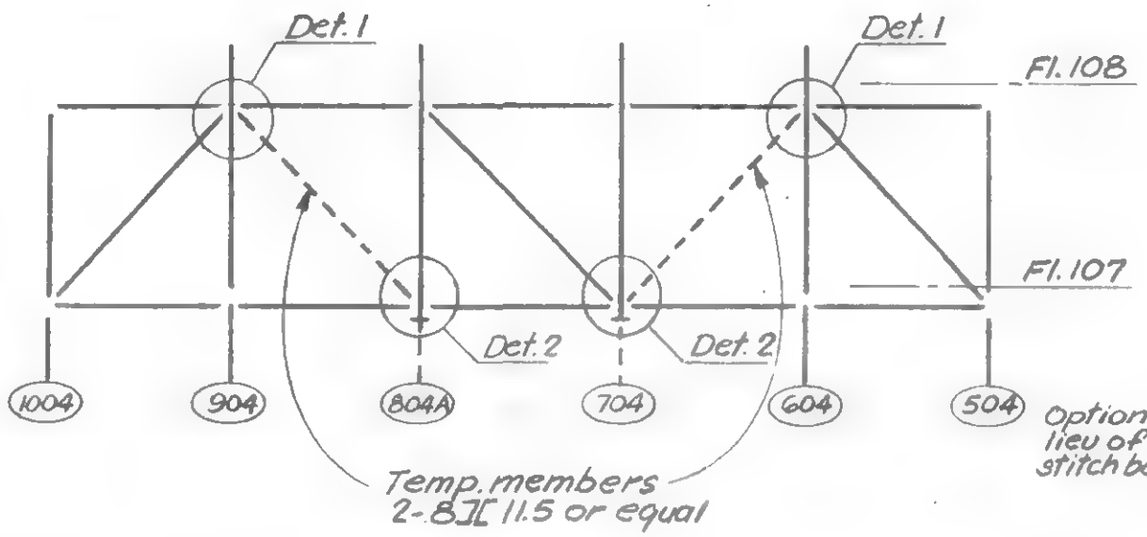

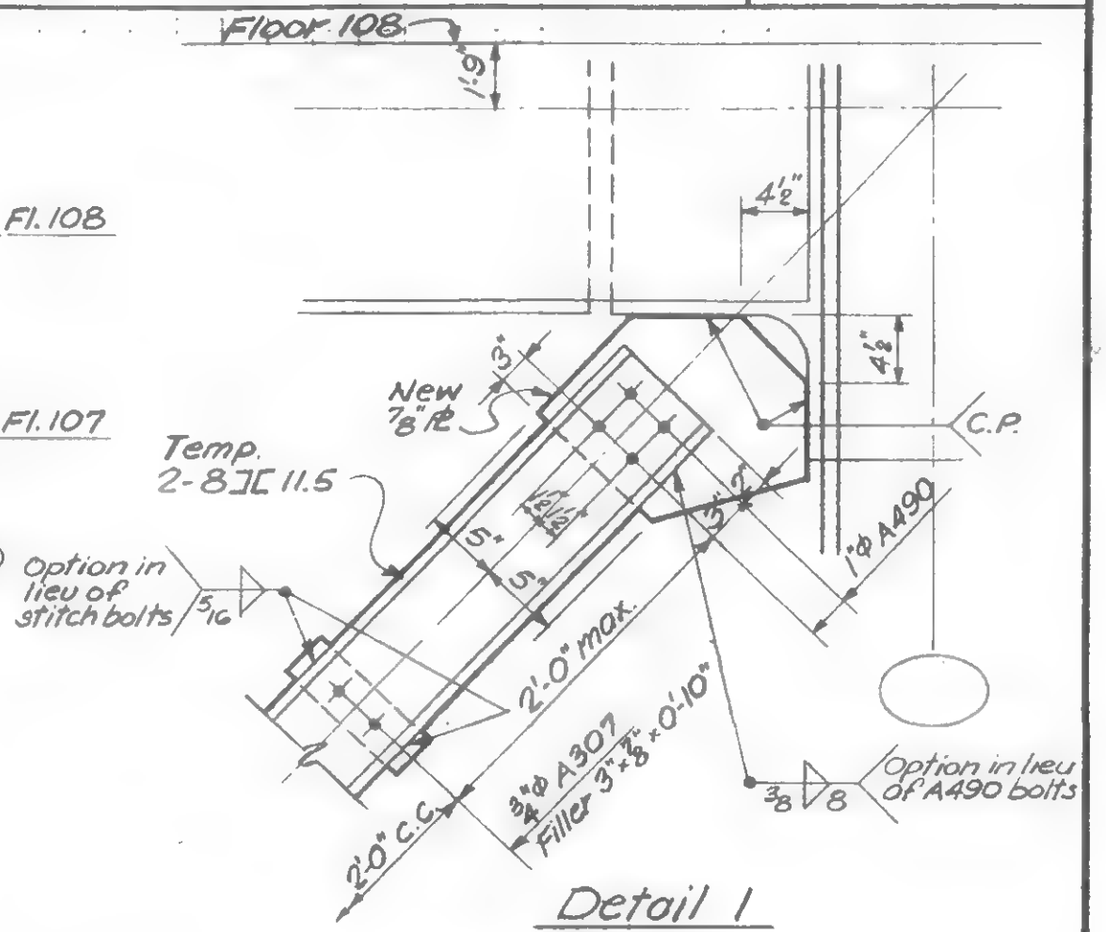

Detail 1

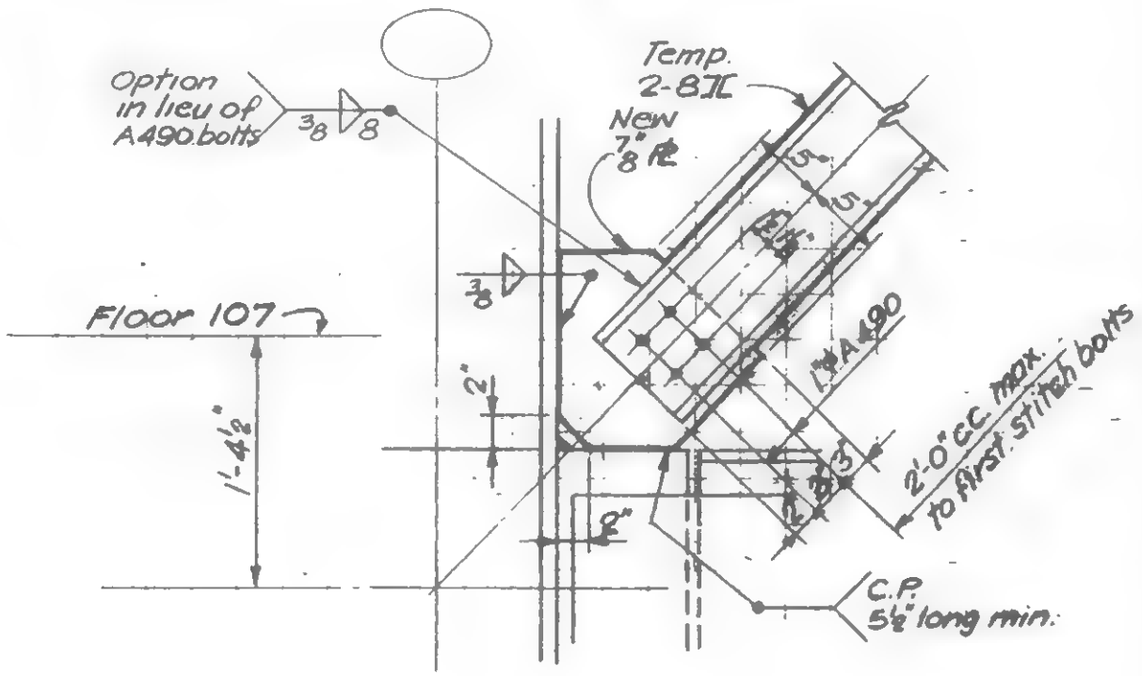

Detail 2

LICENSED PROFESSIONAL ENGINEER
LESLIE E. ROBERTSON
No 34360
UNIVERSITY OF THE STATE OF NEW YORK

DESIGNED

DRAWN
S.C.

REVIEWED

19-A-980

SKILLING, HELLE, CHRISTIANSEN, ROBERTSON — Structural & Civil Engineers

WTC 444.00

PROJECT THE WORLD TRADE CENTER

TITLE INDEX - FLOOR 106 REINF. FOR RESTAURANT

DATE 10-18-79

Drawing Number	Status *	Latest Date or Latest Rev. Date
19-A-981.0	INDEX	11-30-79
19-A-981.X	GENERAL NOTES	10-15-79
19-A-982.3	SD	10-15-79
19-A-983.1	SD	5-9-79
19-A-983.1A	NRR	
19-A-983.1B	NRR	
19-A-983.1C	SD	
19-A-983.1D	SD	
19-A-983.2	SD	
19-A-983.2A	SD	
19-A-983.3	SD	
19-A-983.3A	SD	
19-A-983.4	SD	
19-A-983.4A	SD	
19-A-983.5	SD	
19-A-983.6	SD	
19-A-983.7	SD	
19-A-983.8	SD	
19-A-983.9	SD	
19-A-983.10	SD	
19-A-983.11	SD	
19-A-983.12	SD	
19-A-984.1	SD	
19-A-984.2	SD	
19-A-984.3	SD	
19-A-984.4	NRR	
19-A-984.5	SD	
19-A-984.6	NRR	
19-A-984.7	SD	5-9-79
19-A-984.8	SD	11-30-79
19-A-985.1	SD	
19-A-985.2	SD	
19-A-985.3	SD	
19-A-985.4	SD	
19-A-985.5	SD	
19-A-985.6	SD	
19-A-985.7	SD	
19-A-985.8	SD	
19-A-985.9	SD	11-30-79
19-A-985.10	SD	5-9-79
19-A-986.	NRR	11-30-79
19-A-987.1	SD	11-30-79
19-A-987.2	SD	5-9-79
19-A-987.3	NRR	5-9-79
19-A-987.4	SD	11-30-79
19-A-987.5	SD	5-9-79
19-A-987.6	SD	5-9-79
19-A-988.1	SD	11-30-79
19-A-988.2	SD	5-9-79
19-A-988.3	SD	11-30-79
19-A-989.1	SD	5-9-79
19-A-989.2	SD	11-30-79
19-A-989.3	SD	5-9-79
19-A-989.4	SD	
19-A-990.1	SD	
19-A-990.2	SD	
19-A-990.3	SD	5-9-79
SA-114	SD	11-30-79
SCA-108	SD	10-5-79
SCA-133	SD	10-5-79

DIVISIONS
Gen. Rev.
5-9-79 R
11-30-79 4

LICENSED PROFESSIONAL ENGINEER — LESLIE E. ROBERTSON — No 34360 — UNIVERSITY OF THE STATE OF NEW YORK

SIGNED

DRAWN PMO'Reilly

REVIEWED WAB

* SD = See drawing ; NRR = No reinforcing required or no new reinforcing required
Note: Details indicated thus 988A are to be performed under this contract WTC 444.00. Details indicated otherwise have been previously installed or are not required.

19-A-981.0

SKILLING, HELLE, CHRISTIANSEN, ROBERTSON — Structural & Civil Engineers

WTC 444.00 & 444.01

PROJECT THE WORLD TRADE CENTER | TITLE GENERAL NOTES - FLOOR 106 | DATE 5-9-79

REVISIONS

Revised 10/5/79

10/15/79 3

Codes

1. Building Code for the City of New York.
2. AISC "Specification for the Design, Fabrication, and Erection of Structural Steel for Buildings.
3. Structural Welding Code AWS D1.1-Rev. 2-77.
4. ACI 318-77 "American Concrete Institute Standard Building Code Requirements for Reinforced Concrete".

Site

1. Dimensions shown in the Drawings are correct to the best of the knowledge of the Engineer. However, the Contractor shall verify all dimensions by field measurements prior to installing any material. For material fabricated to fit within restricted dimensions, field dimensions shall be verified prior to fabrication and shall be shown in the shop detail drawings. Shop drawings shall be submitted for approval to the PANYNJ.
2. The length of new members which can be delivered to their various locations is generally limited to 15 feet. The Contractor shall familiarize himself with the site and, where field splicing of members is required, they shall be shown in the shop detail drawings.

Structural Steel

1. All steel shall be ASTM A36 or another weldable steel included in paragraph 1.4.1.1 of AISC Specifications.
2. All bolted connections shall be made with A325-F bolts.
3. Flags are used to convey end reactions and/or details.

   26 / — indicates a connection detail meeting AISC requirements for 26 kips.

   985A / — indicates a detail is shown in page 19-A-985. When reactions are indicated, the connection is to be provided as above.
4. Electrodes, flux and shielding gas shall conform to AWS A5.1-69, AWS A5.17-69 or AWS A5.20-69 as applicable and shall provide physical properties after welding equivalent to or better than E7018 low hydrogen electrodes. Drying or redrying of low hydrogen electrodes shall be performed at a temperature between 700 and 800 degrees Fahrenheit for not less than one hour.
5. If parts to be joined with fillet welds cannot be brought into direct contact, the fillet weld shall be increased in size above that indicated in the drawing. The increase in size shall be equal to or greater than the gap.
6. Remove spray fireproofing as required. Spray fireproof all added steel and replace spray fireproofing on existing steel.

Reinforced Concrete

1. Concrete
   A. Concrete shall be f'c = 4,000 psi made with normal weight aggregate.
   B. Concrete which is to be adjacent to existing concrete shall have mixes designed and proportioned to produce minimum practicable shrinkage.
   C. Where concrete is to be cast against existing concrete, the existing concrete shall be cleaned and completely coated with an approved epoxy bonding agent prior to casting new concrete.
2. Reinforcing Steel
   A. All reinforcing steel shall be deformed bars conforming to ASTM A615, Grade 60 unless otherwise noted in the Drawings.
   B. Detailing of all reinforcing steel shall conform to "ACI Manual of Standard Practice for Detailing Reinforced Concrete Structures — (ACI 315-74)".

DESIGNED

DRAWN

REVIEWED W Brewer

19-A-981.X

SKILLING, HELLE, CHRISTIANSEN, ROBERTSON — Structural & Civil Engineers

PROJECT: THE WORLD TRADE CENTER | TITLE: AL 106 - CONNECTION DETAILS | DATE: 1/7/71

REVISIONS

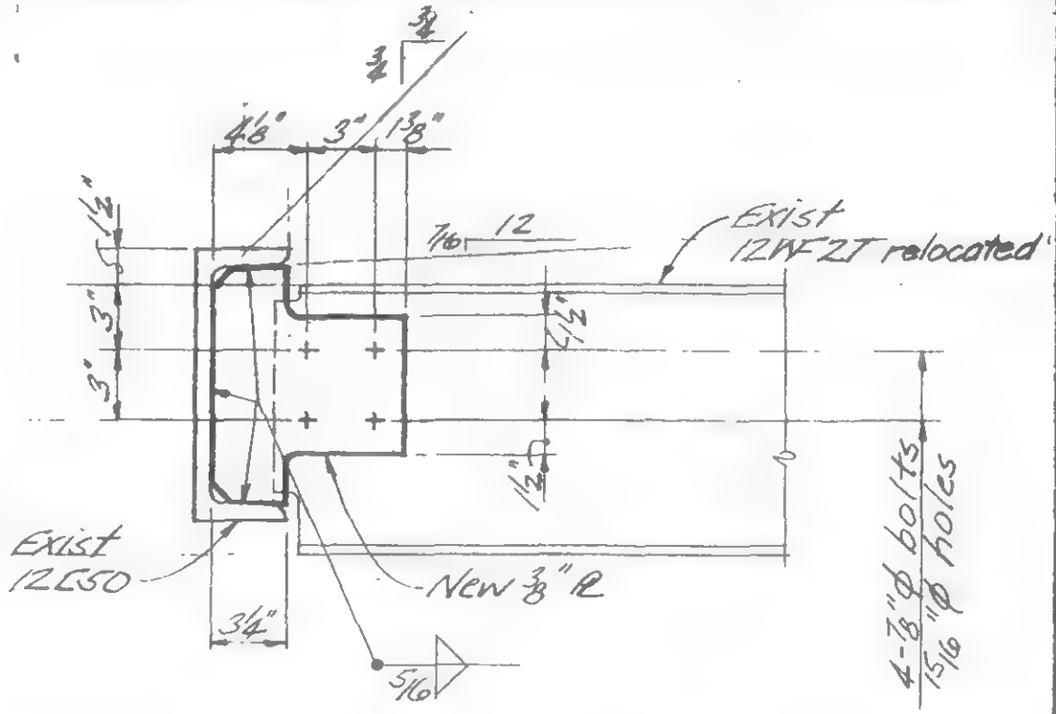

Detail 106A

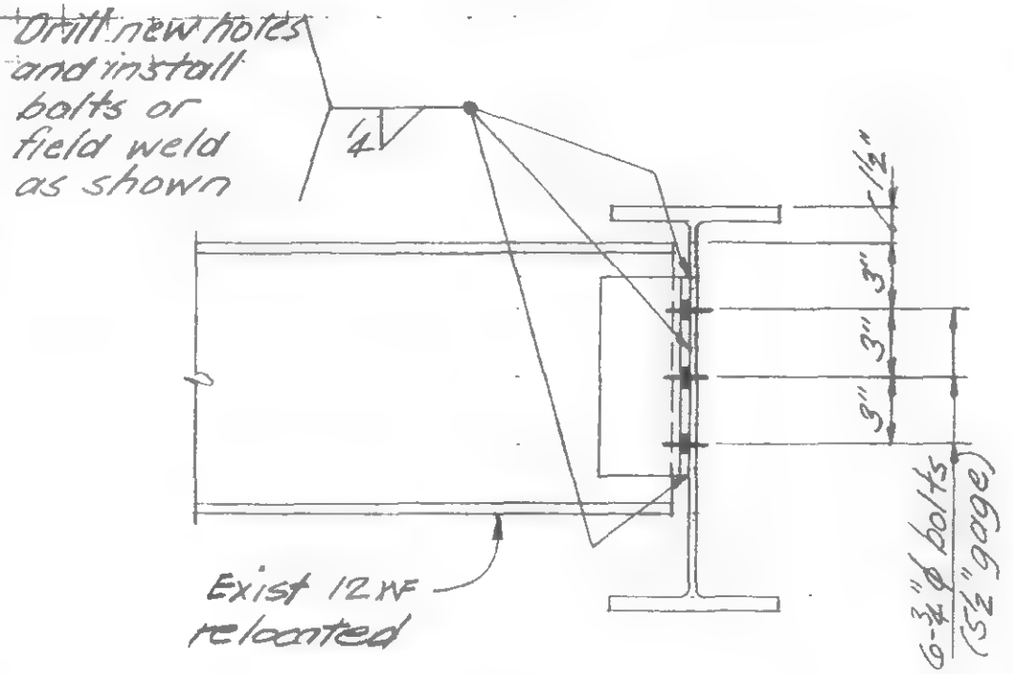

Detail 106B

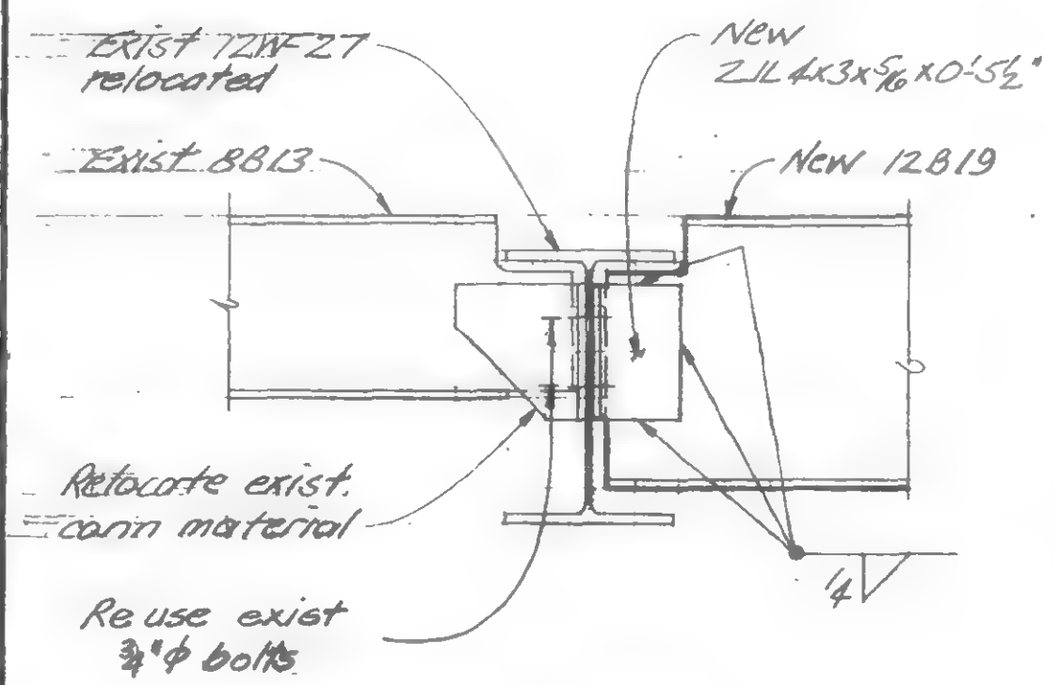

Detail 106C

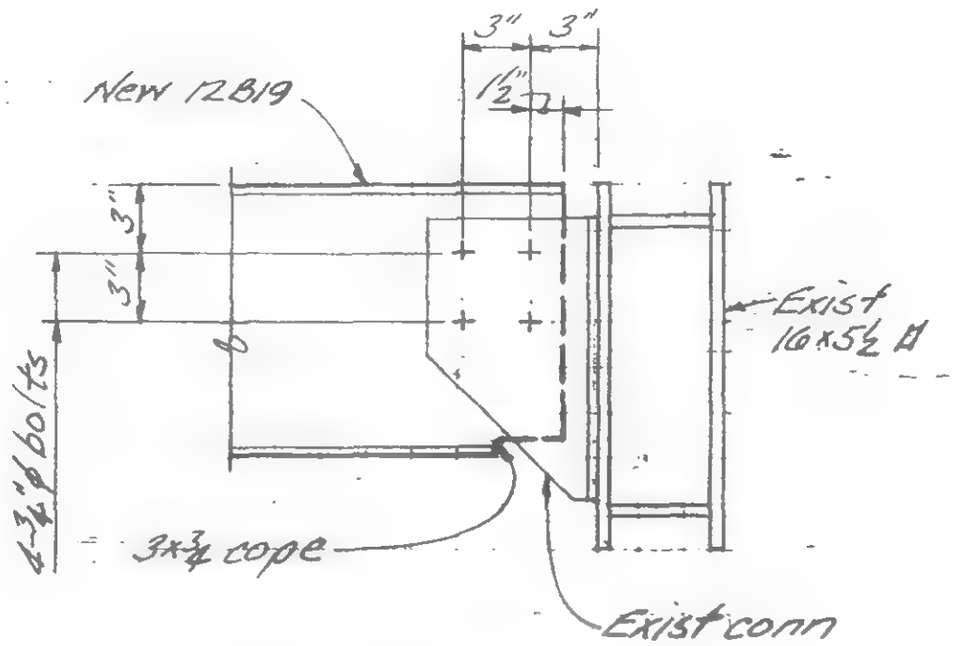

Detail 106D

LICENSED PROFESSIONAL ENGINEER — LESLIE E. ROBERTSON — No. 34360 — UNIVERSITY OF THE STATE OF NEW YORK

DESIGNED

DRAWN J. Adams

REVIEWED

12-A-98A.1

SKILLING, HELLE, CHRISTIANSEN, ROBERTSON — Structural & Civil Engineers

PROJECT THE WORLD TRADE CENTER | TITLE Fl. 106 - CONNECTION DETAILS | DATE 1/7/71

REVISIONS

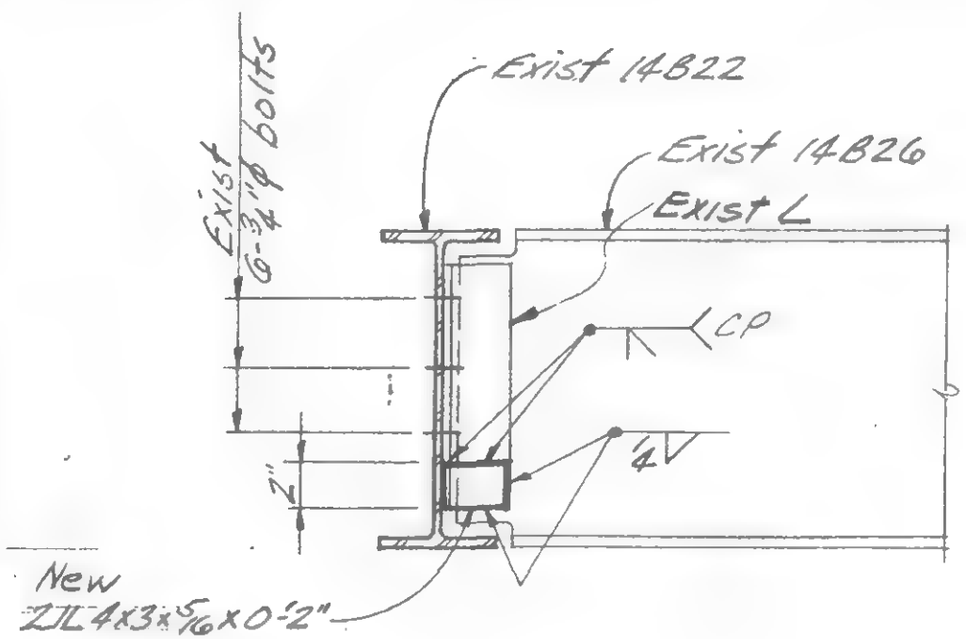

Detail 106E

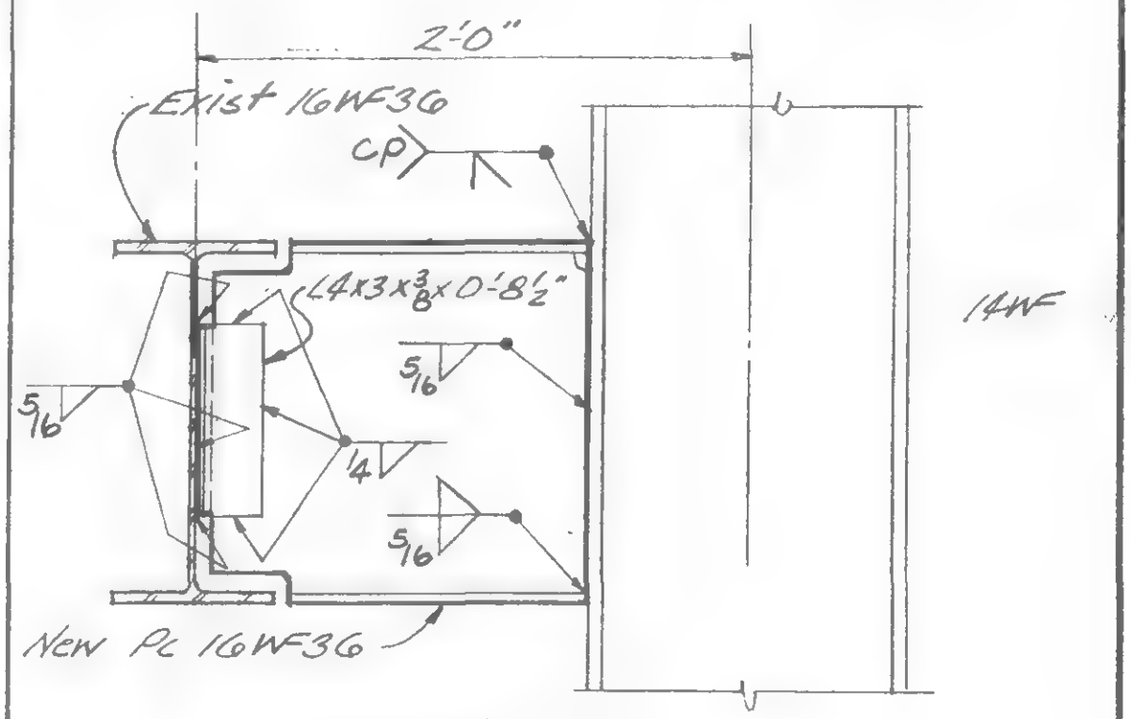

Detail 106F

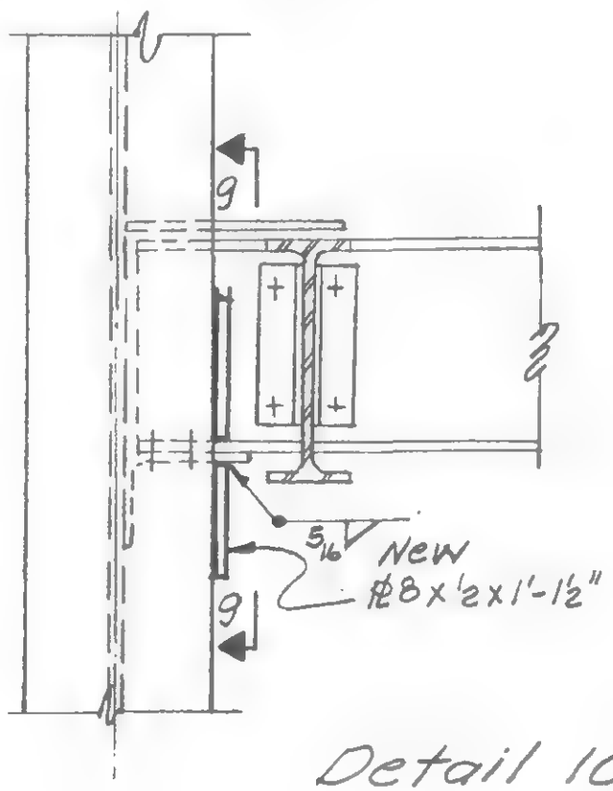

Detail 106G

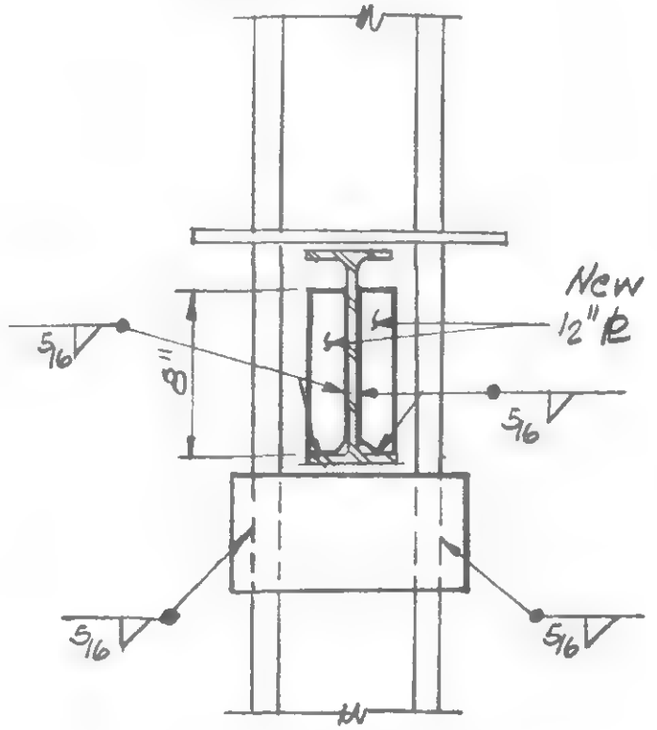

Section 9-9

LICENSED PROFESSIONAL ENGINEER
LESLIE E. ROBERTSON
No 34360
UNIVERSITY OF THE STATE OF NEW YORK

SIGNED

DRAWN
J. Hrams

REVIEWED

19-A-981.2

SKILLING, HELLE, CHRISTIANSEN, ROBERTSON — Structural & Civil Engineers

PROJECT THE WORLD TRADE CENTER | TITLE FL. 106 CONNECTIONS | DATE 1-7-71

REVISIONS

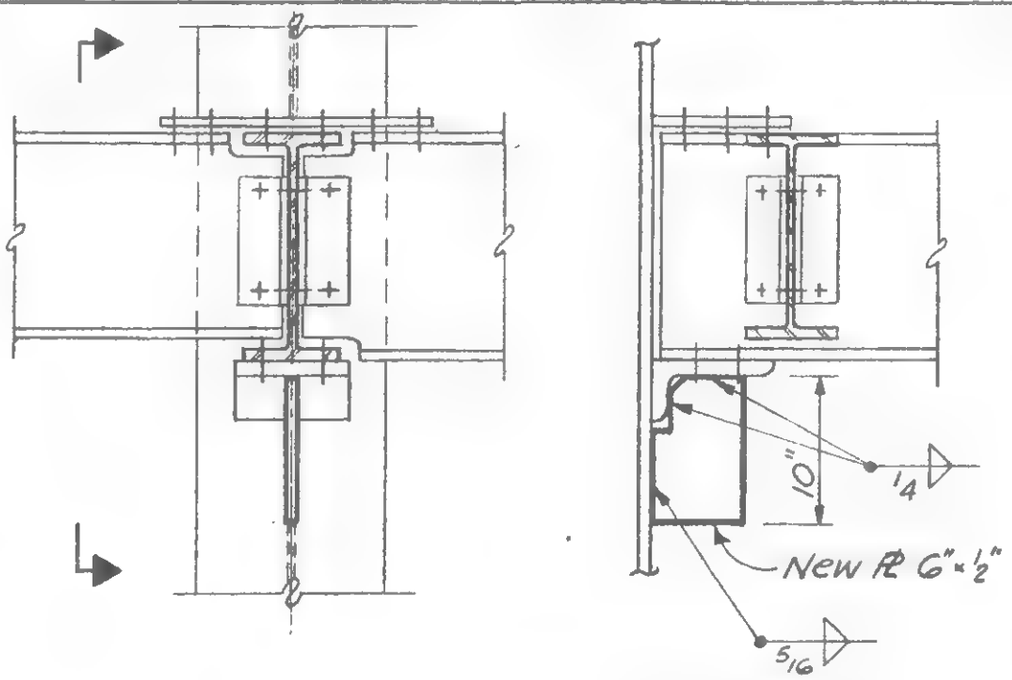

Section

DETAIL 106 H

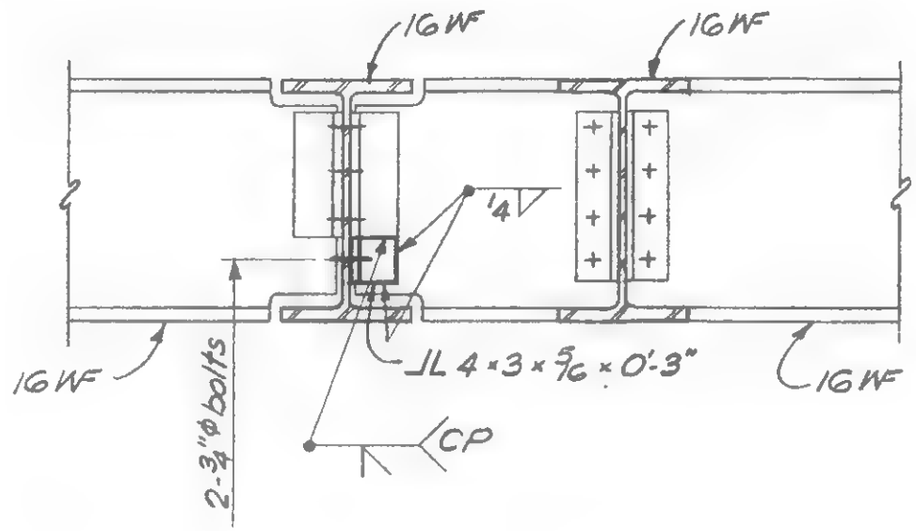

DETAIL 106 K

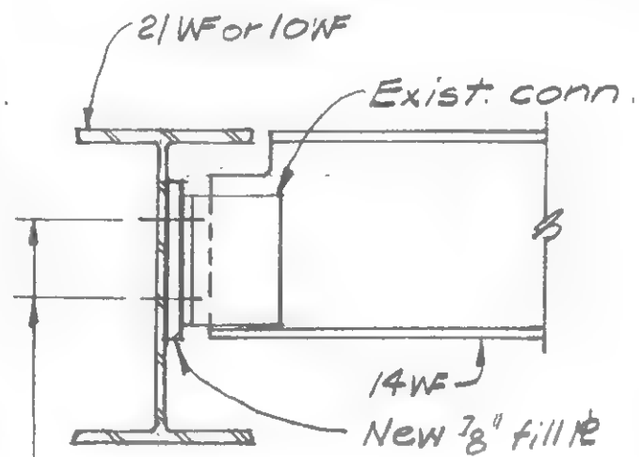

DETAIL 105A

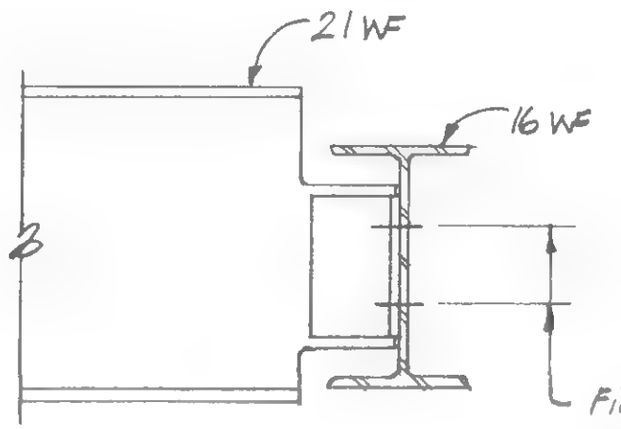

DETAIL 105 B

LICENSED PROFESSIONAL ENGINEER LESLIE E. ROBERTSON No 34360 UNIVERSITY OF THE STATE OF NEW YORK

SIGNED

DRAWN S.C.

REVIEWED

19-A-981.3

SKILLING, HELLE, CHRISTIANSEN, ROBERTSON — Structural & Civil Engineers

PROJECT: THE WORLD TRADE CENTER | TITLE: Fl. 106 - BEAM COVER PL | DATE: 1/7/71

REVISIONS

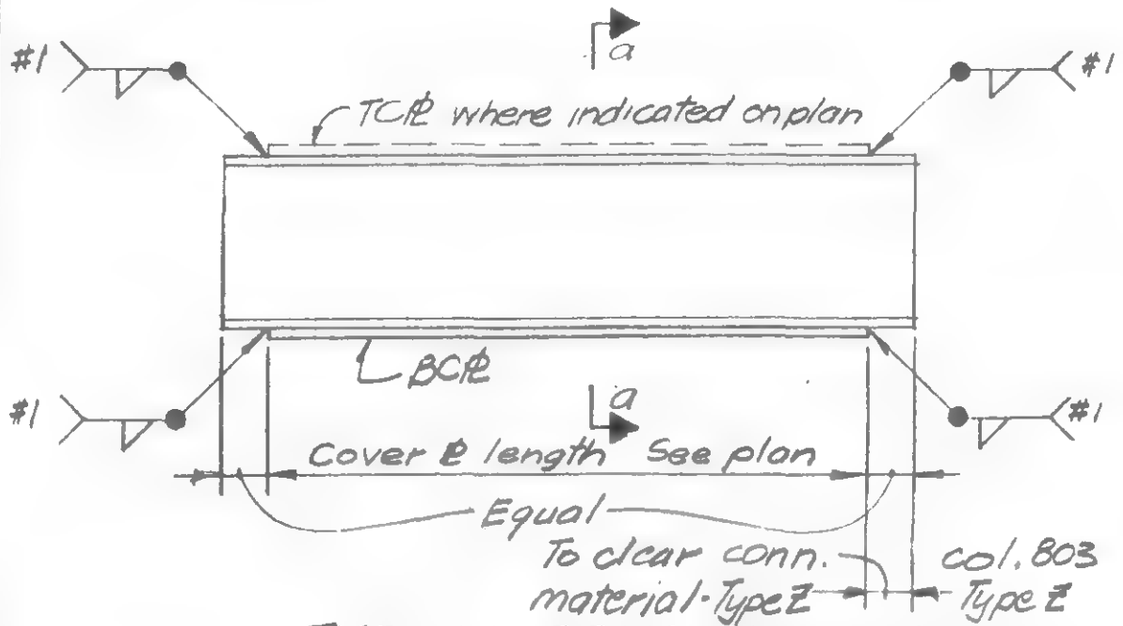

TYPICAL BEAM ELEVATION

BEAM ELEVATION TYPE Z (as noted)

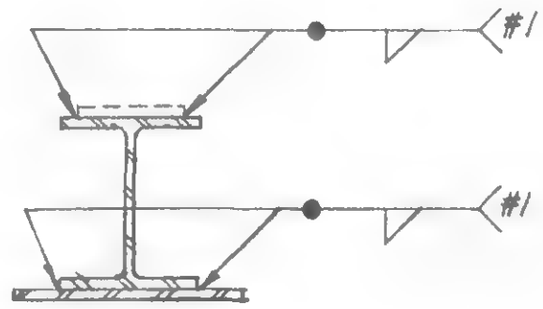

Section a-a

WELD #1 SCHEDULE	
COVER ℄ THICKNESS	WELD #1
38 & 1/2	1/4
3/4 & 7/8	5/16
1 1/4	3/8

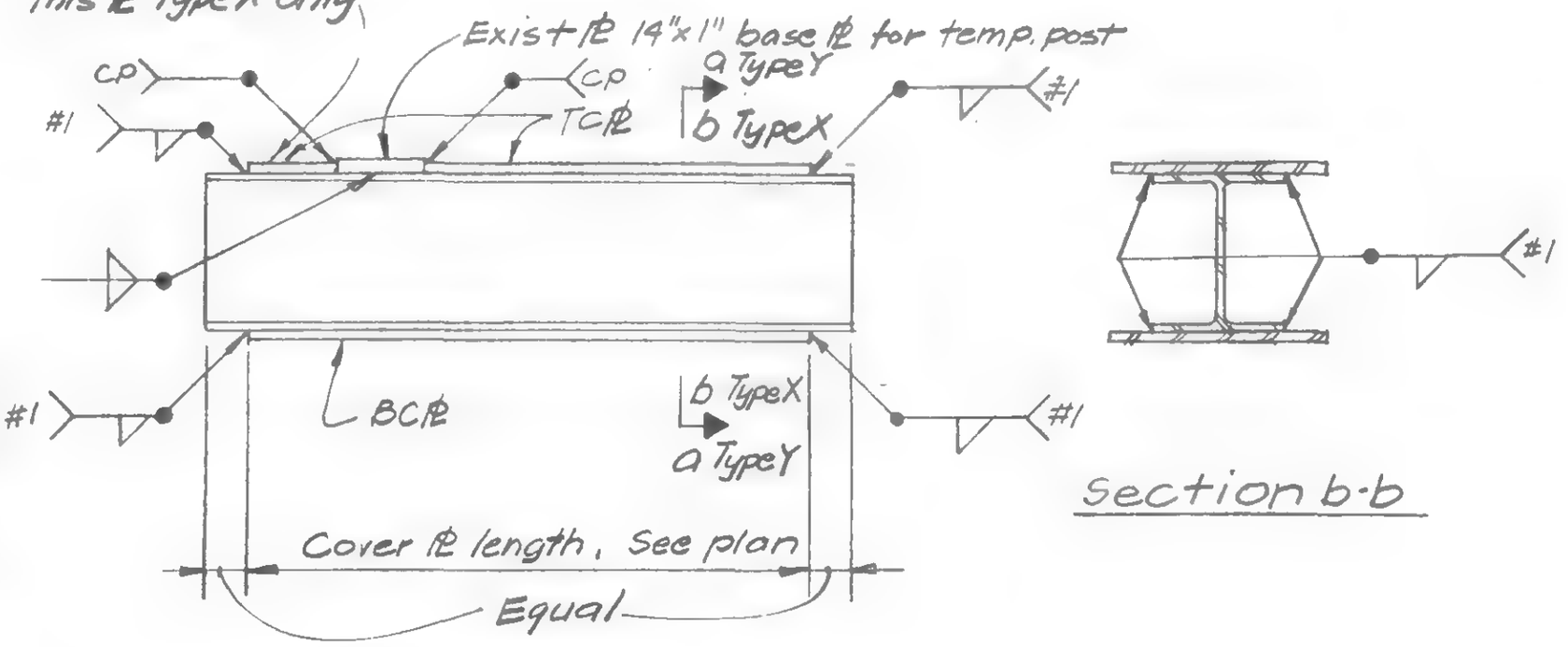

Section b-b

BEAM ELEVATION - TYPE X & Y

LICENSED PROFESSIONAL ENGINEER LESLIE E. ROBERTSON No 34360 UNIVERSITY OF THE STATE OF NEW YORK

SIGNED

DRAWN R.Orelli

REVIEWED

B-A-982.1

SKILLING, HELLE, CHRISTIANSEN, ROBERTSON — Structural & Civil Engineers

PROJECT: THE WORLD TRADE CENTER | TITLE: FL. 106 BEAM COVER PL | DATE: 1/7/71

REVISIONS

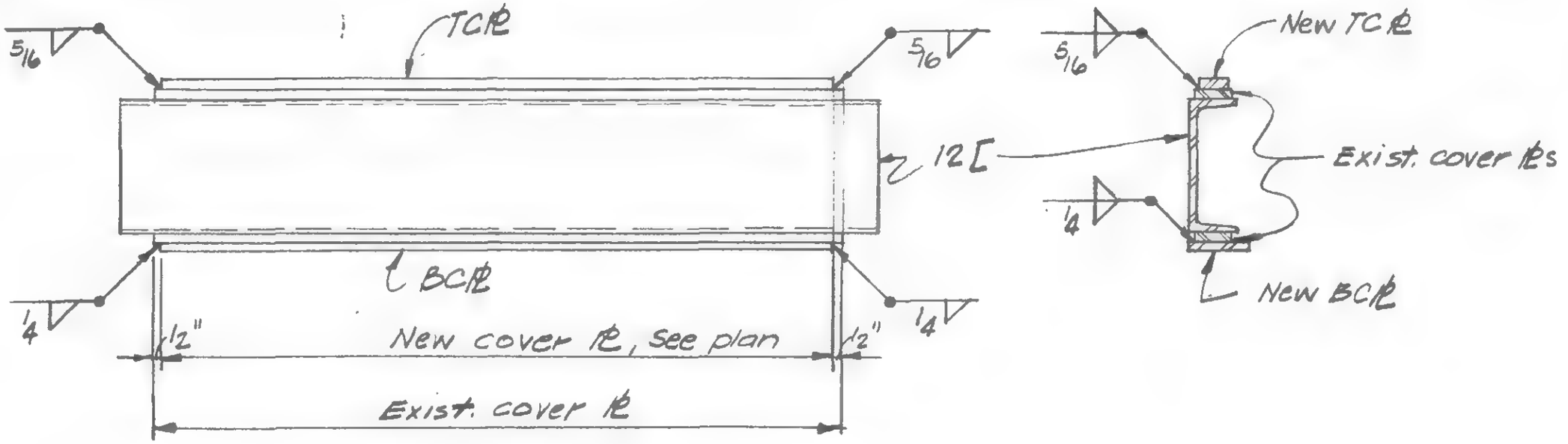

BEAM ELEVATION TYPE W

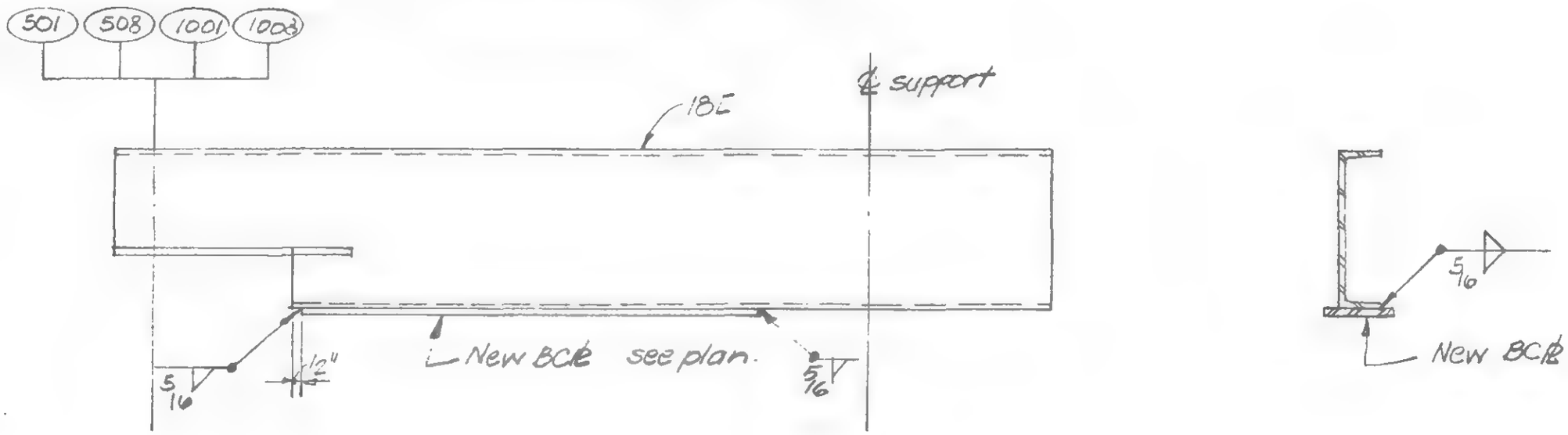

TYPE V

LICENSED PROFESSIONAL ENGINEER
LESLIE E. ROBERTSON
No 34360
UNIVERSITY OF THE STATE OF NEW YORK

SIGNED

DRAWN P Orelli

REVIEWED

19-A-982.2

SKILLING, HELLE, CHRISTIANSEN, ROBERTSON — Structural & Civil Engineers

PROJECT THE WORLD TRADE CENTER | TITLE DUMBWAITER PIT DETAILS - FL. 106

WTC 449.00 449.01

DATE 5-9-79

VISIONS

10/5/79 (2)

10/15/79 (3)

A

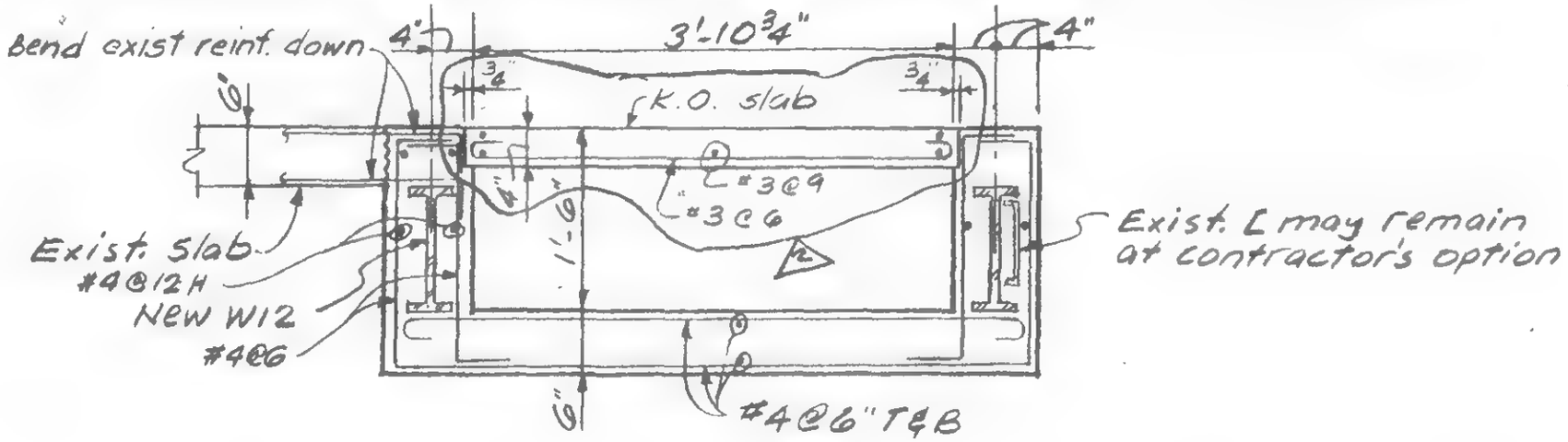

B

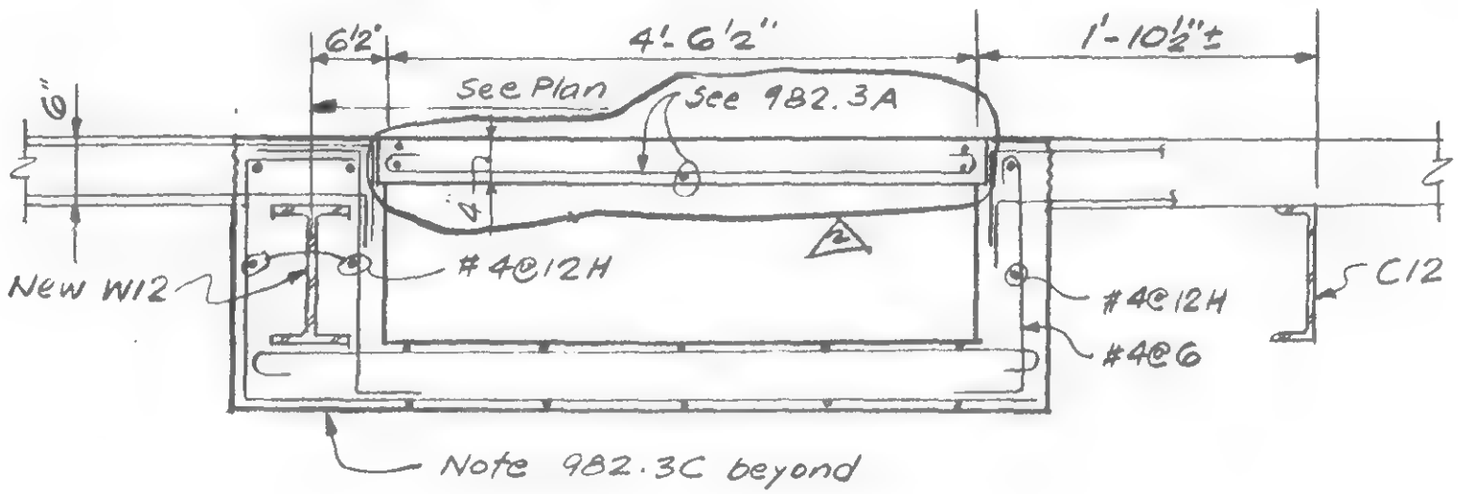

C

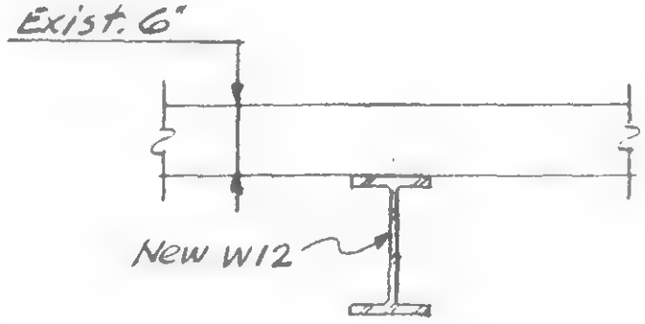

D

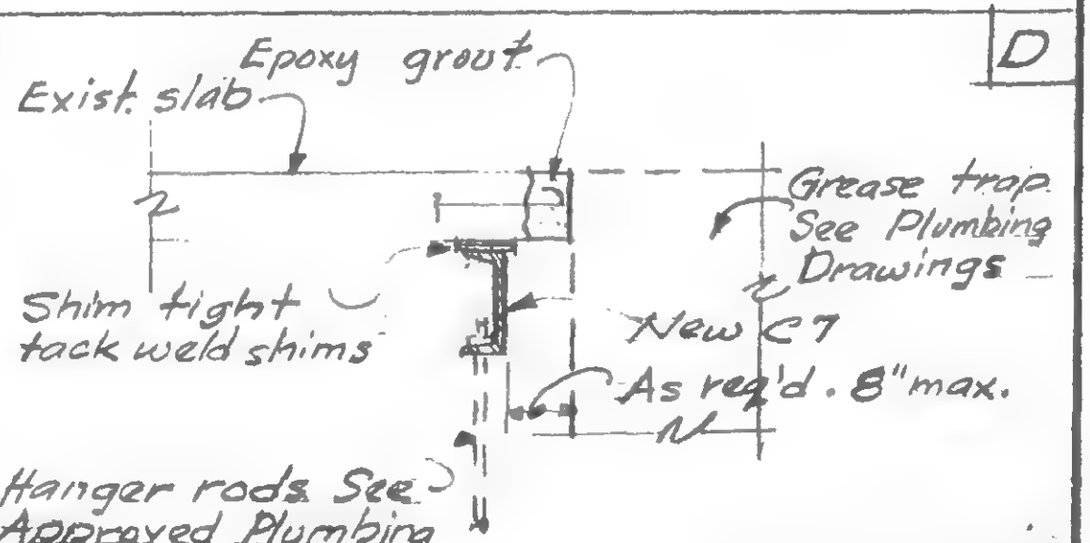

19-A-982.3

LICENSED PROFESSIONAL ENGINEER LESLIE E. ROBERTSON No. 34360 UNIVERSITY OF THE STATE OF NEW YORK

DRAWN

REVIEWED WEB

7/30/71
10/6/71
5/9/79

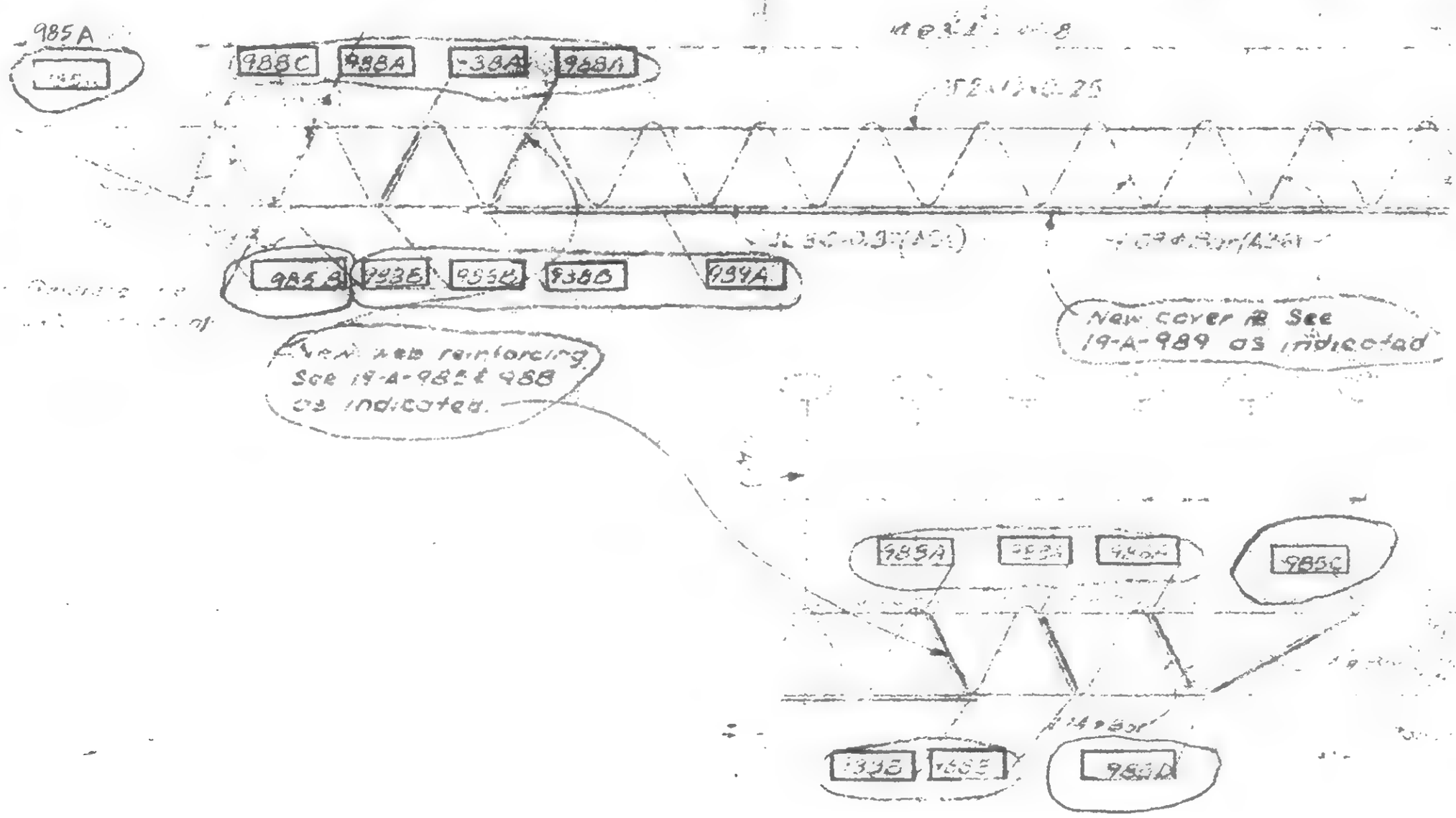

SKILLING, HELLE, CHRISTIANSEN, ROBERTSON — Structural & Civil Engineers

PROJECT: TWO WORLD TRADE CENTER | TITLE: FLOOR TRUSS C 32 T) – Fl. 106 | DATE: 1-7-71

REVISIONS
11/27/71
7/30/71
Printed 10/6/71
5/9/79

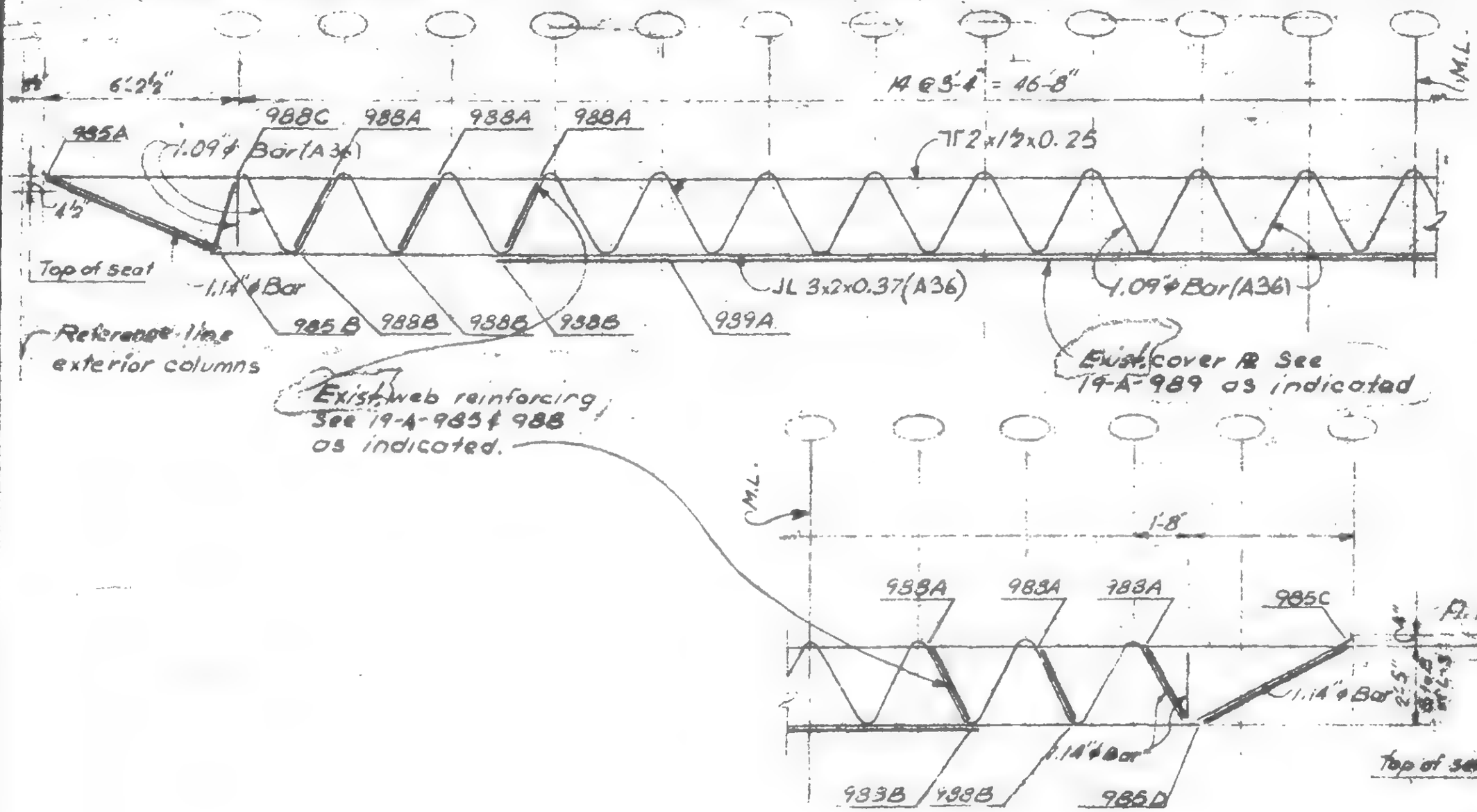

LICENSED PROFESSIONAL ENGINEER — LESLIE E. ROBERTSON — No 34360 — UNIVERSITY OF THE STATE OF NEW YORK

DESIGNED

DRAWN

19-A-985 (1A)

SKILLING, HELLE CHRISTIANSEN, ROBERTSON — Structural & Civil Engineers

PROJECT: THE WORLD TRADE CENTER | TITLE: FLOOR TRUSS C 32 TI - Fl. 106 | DATE: 1-7-71

REVISIONS
1/27/71
7/30/71
Printed 10/20/71
5/9/79

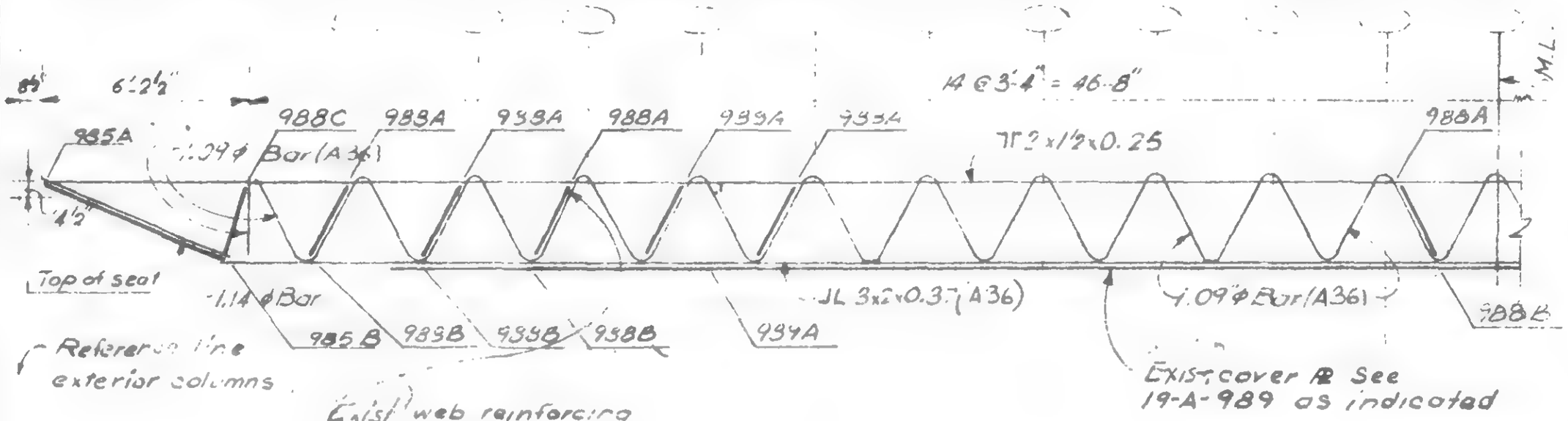

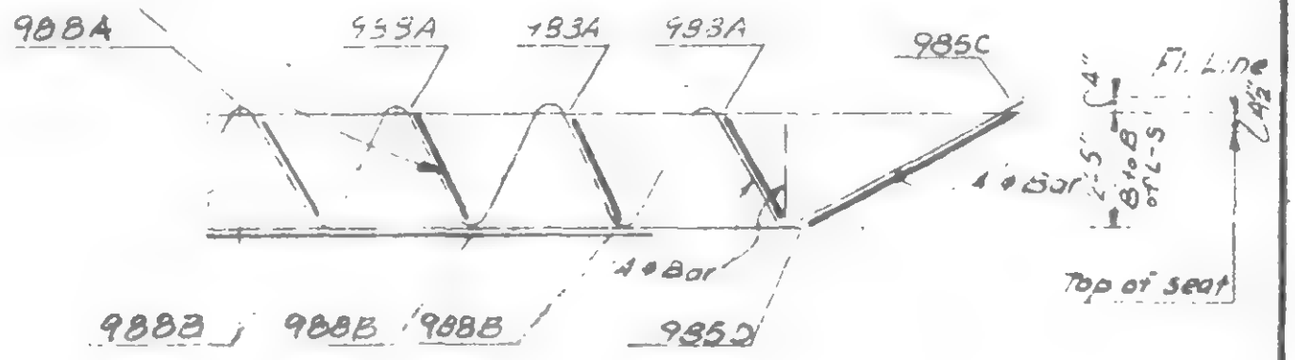

SIGNED

DRAWN

REVIEWED

19-A-983.1B

SKILLING, HELLE, CHRISTIANSEN, ROBERTSON — Structural & Civil Engineers

PROJECT: THE WORLD TRADE CENTER | TITLE: FLOOR TRUSS C 32 T1 – Fl. 106 | DATE: 5-9-79

REVISIONS

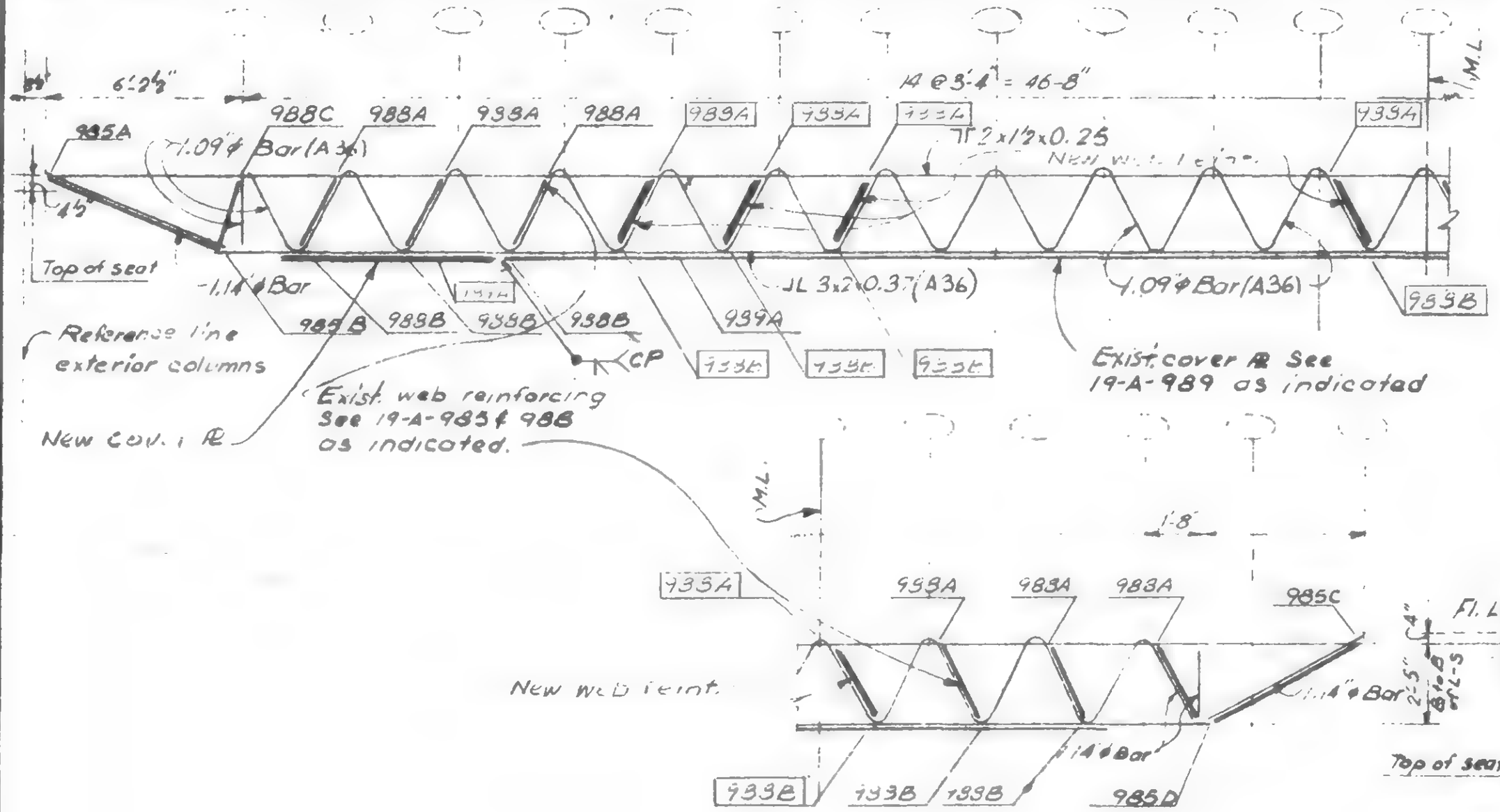

LICENSED PROFESSIONAL ENGINEER — LESLIE E. ROBERTSON — No 34360 — UNIVERSITY OF THE STATE OF NEW YORK

SIGNED

DRAWN

REVIEWED W Brewer

19-A-983.1C

REVISIONS

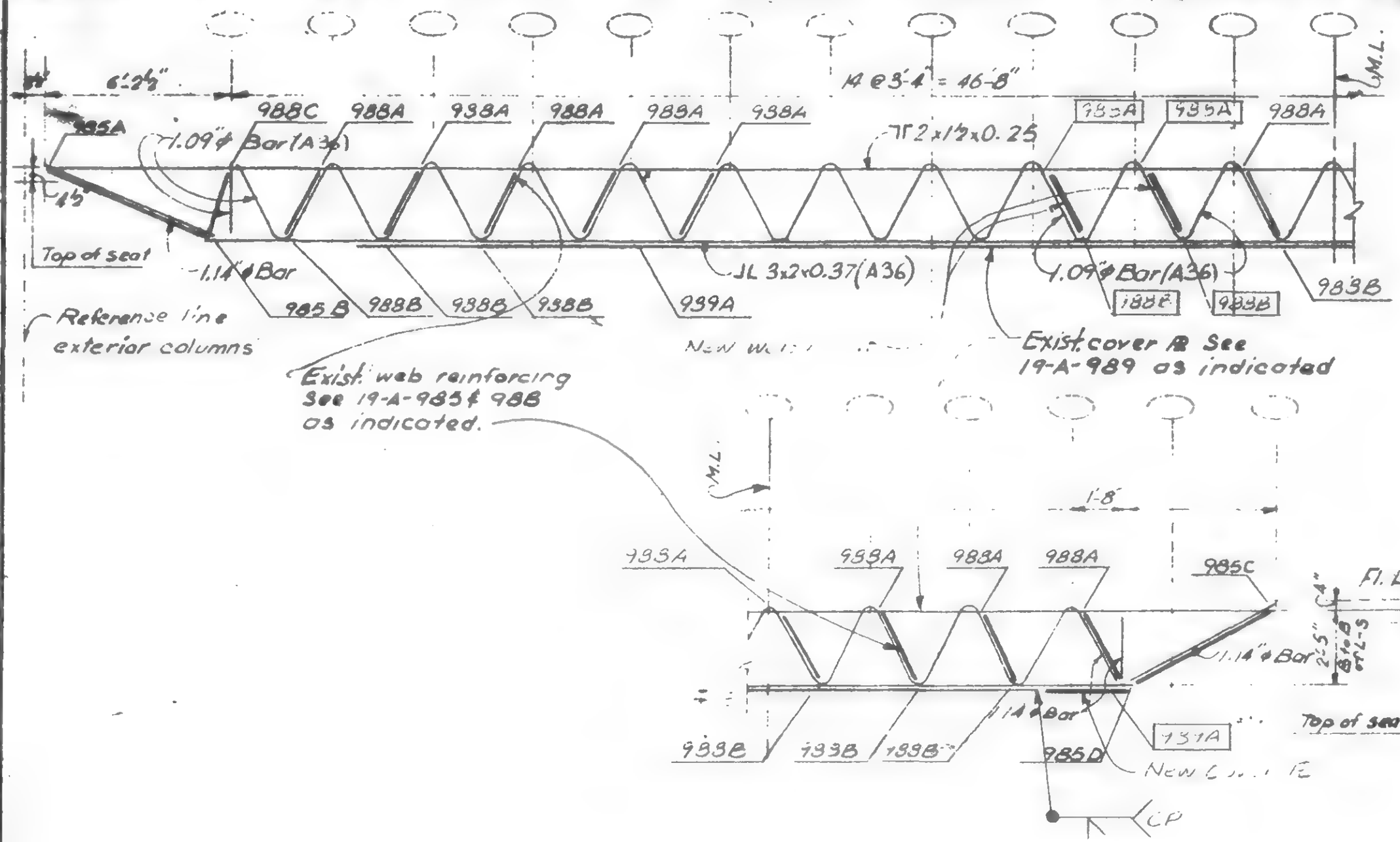

LESLIE E. ROBERTSON LICENSED PROFESSIONAL ENGINEER NO 34360 CITY OF THE STATE OF NEW YORK

ED
DRAWN
REVISED

19-A-983.1D

SKILLING CHRISTIANSEN ROBERTSON — Structural & Civil Engineers

TRADE CENTER | FLOOR TRUSS C32 T1 - F1.106 | 1-7-71

REVISIONS

7/27/71
7/30/71
10/6/71
5/9/79

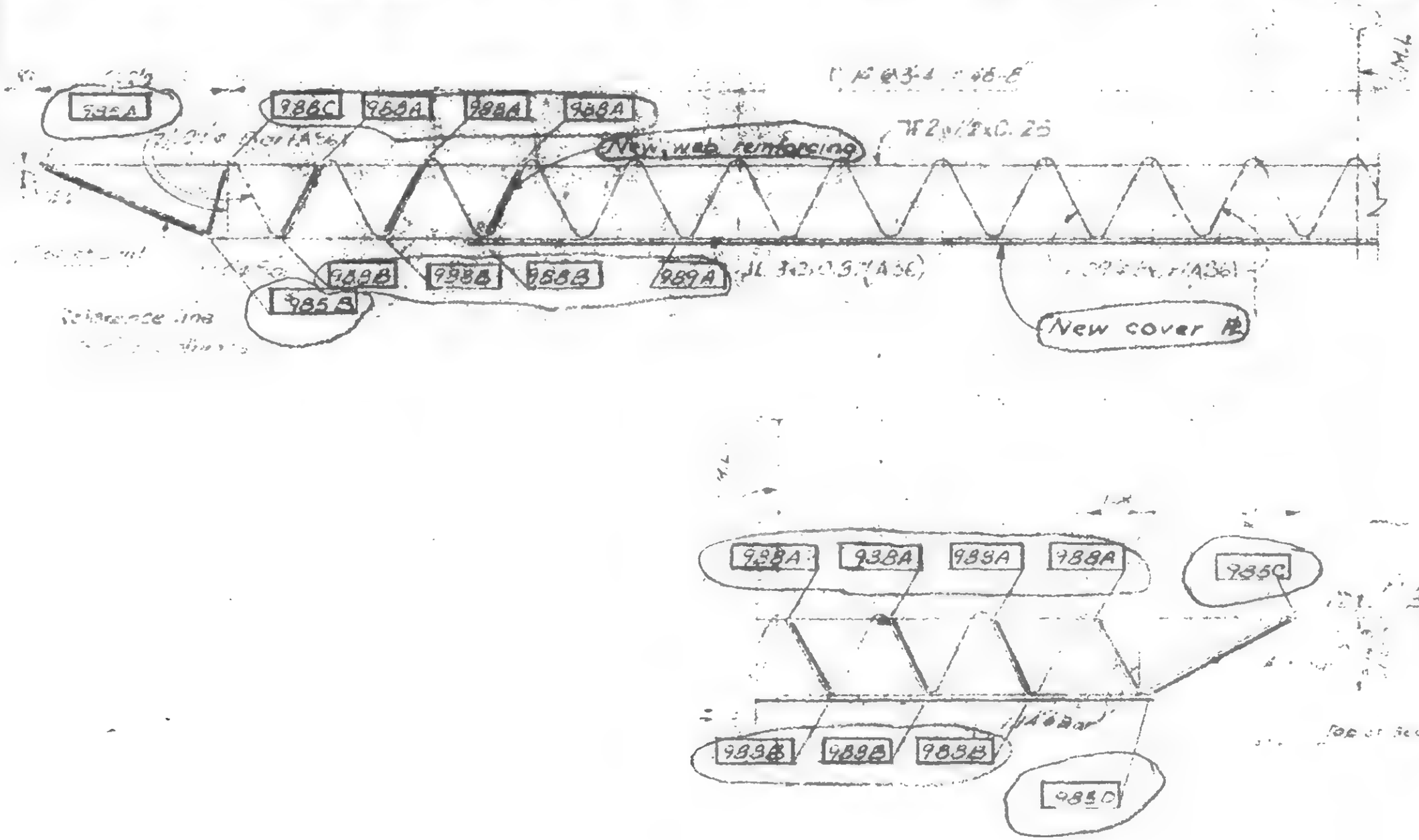

WOB

19-A-983.2

SKILLING, HELLE, CHRISTIANSEN, ROBERTSON — Structural & Civil Engineers

PROJECT: THE WORLD TRADE CENTER | TITLE: FLOOR TRUSS C32 T1 - Ft. 106 | DATE: 1-7-71

REVISIONS

1/27/71

7/30/71

Printed 10/6/71

5/9/79

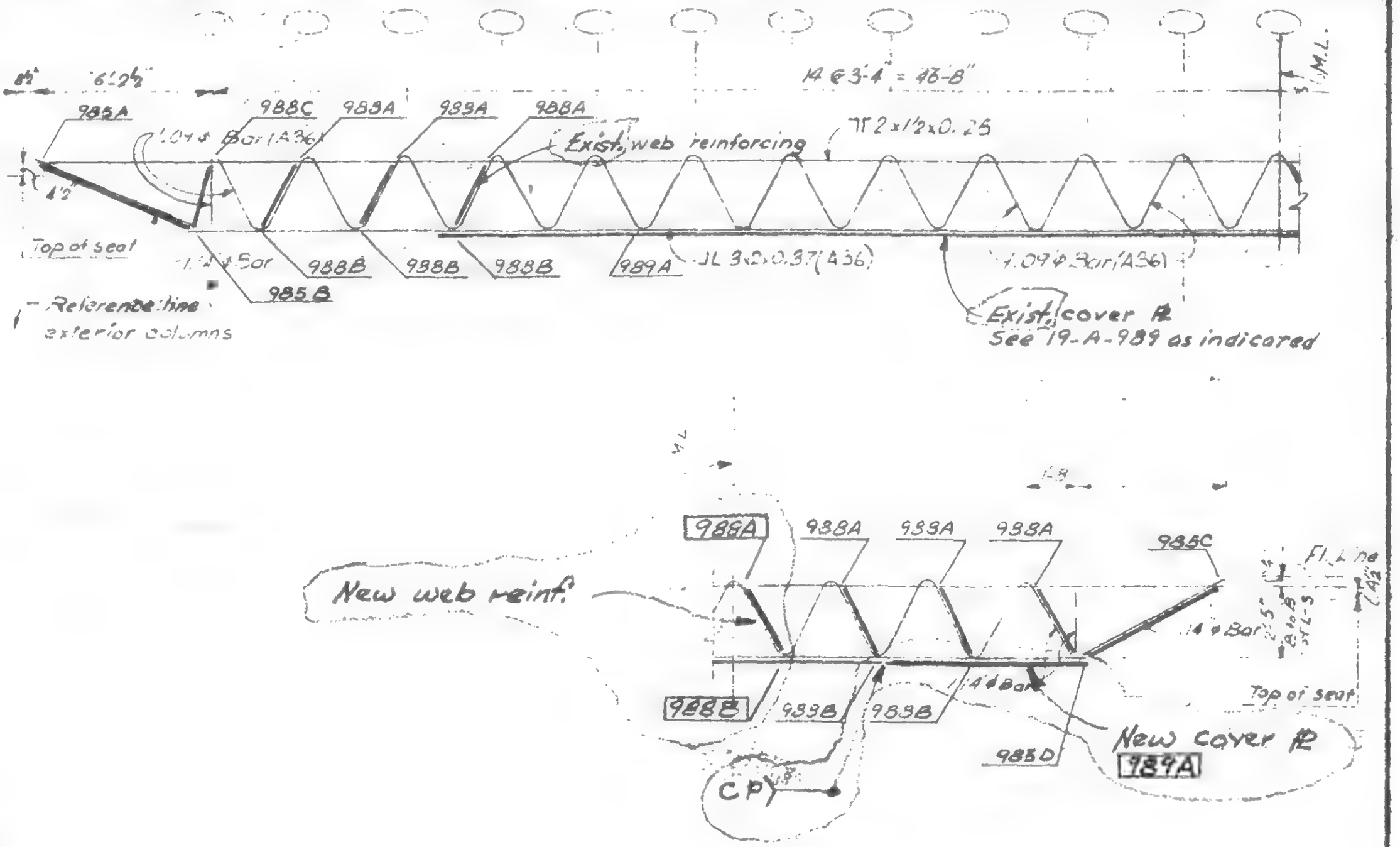

19-[illegible]985.2A

SKILLING HELLE CHRISTIANSEN ROBERTSON — Structural & Civil Engineers

WORLD TRADE CENTER | TYP. FLOOR TRUSS CHORD - Fl. 106 | DATE 1-7-71

REVISIONS

1/27/71

7/30/71

10/6/71

5/9/79

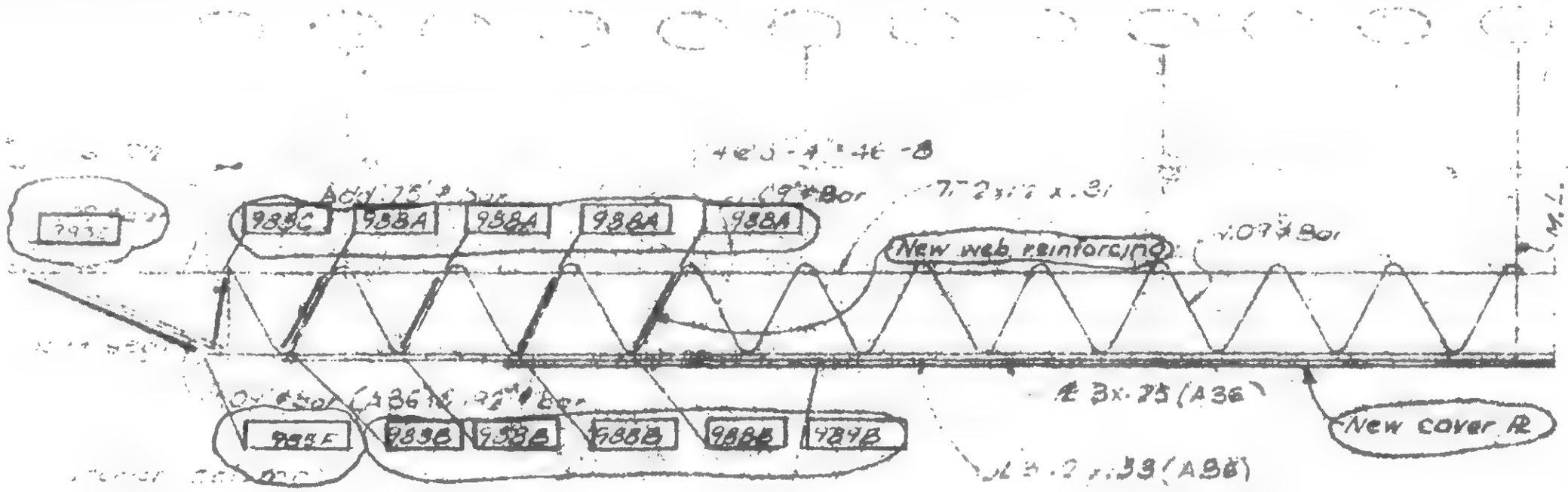

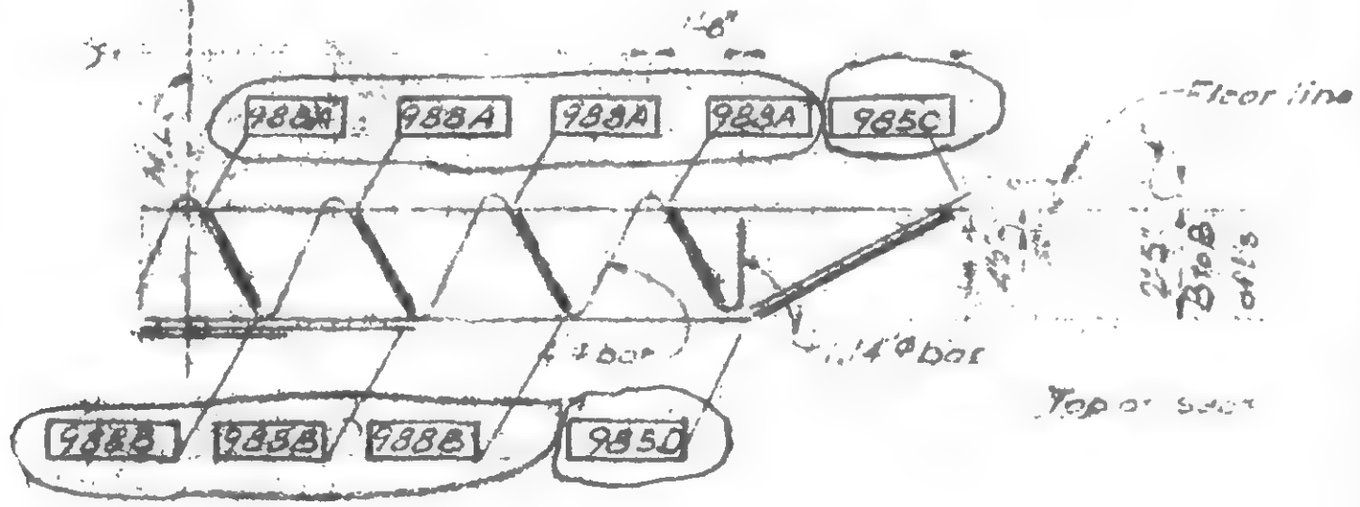

WAB

9-A-983.3

SKILLING, HELLE, CHRISTIANSEN, ROBERTSON — Structural & Civil Engineers

PROJECT: THE WORLD TRADE CENTER | TITLE: FLOOR TRUSS C32T8 - Fl. 106 | DATE: 1-7-71

REVISIONS

1/27/71
7/30/71
Printed 10/6/71
5/9/79

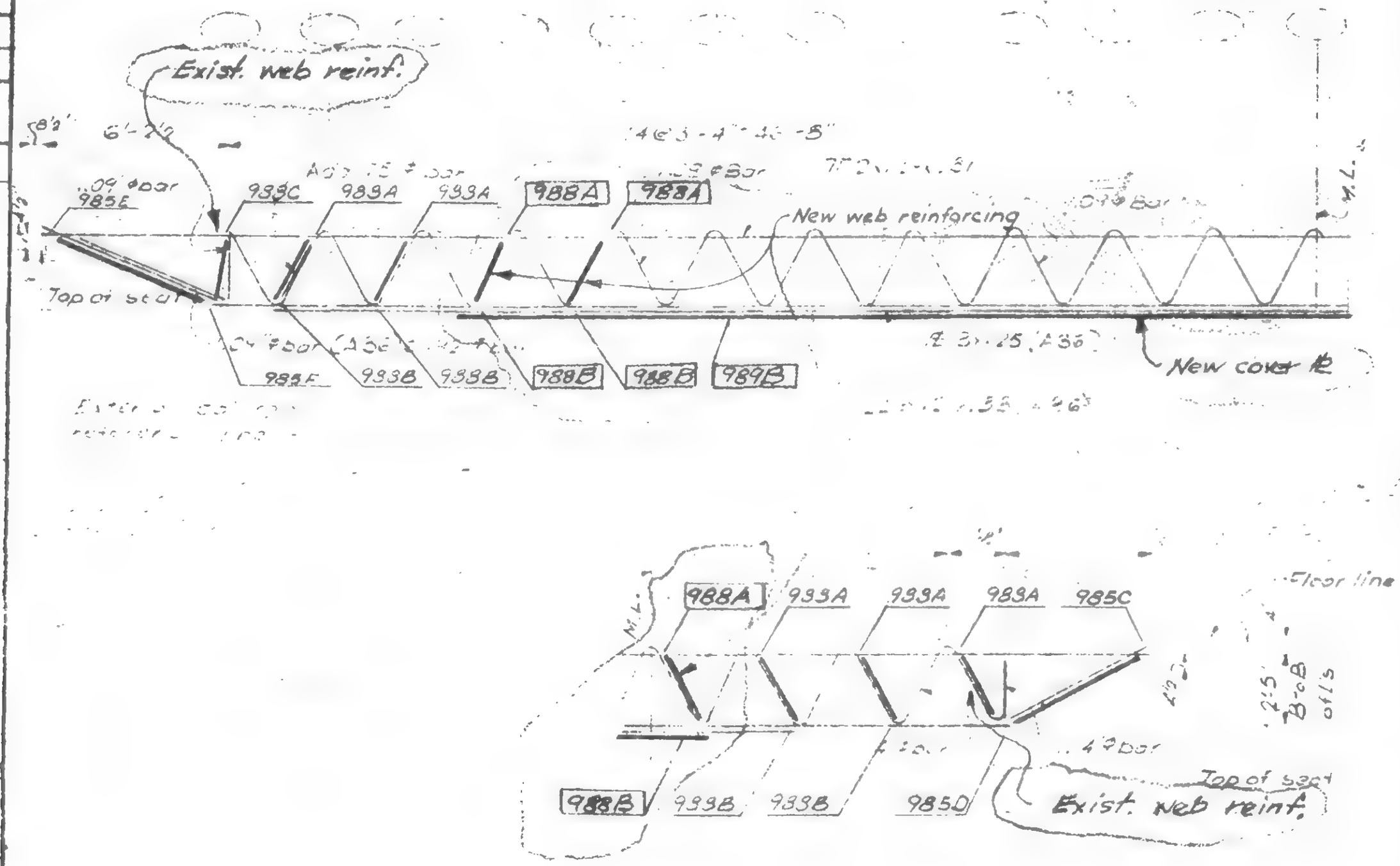

LICENSED PROFESSIONAL ENGINEER
LESLIE E. ROBERTSON
NO 34360
UNIVERSITY OF THE STATE OF NEW YORK

CHKD

DRAWN

REVIEWED W Byewer

19-A-983.3A

SKILLING HELLE CHRISTIANSEN ROBERTSON — Structural & Civil Engineers

PROJECT: T-E WORLD TRADE CENTER | TITLE: FLOOR TRUSS C3277-Fl. 106 | DATE: 1-7-71

REVISIONS

1/27/71
7/30/71
10/6/71
5/9/79

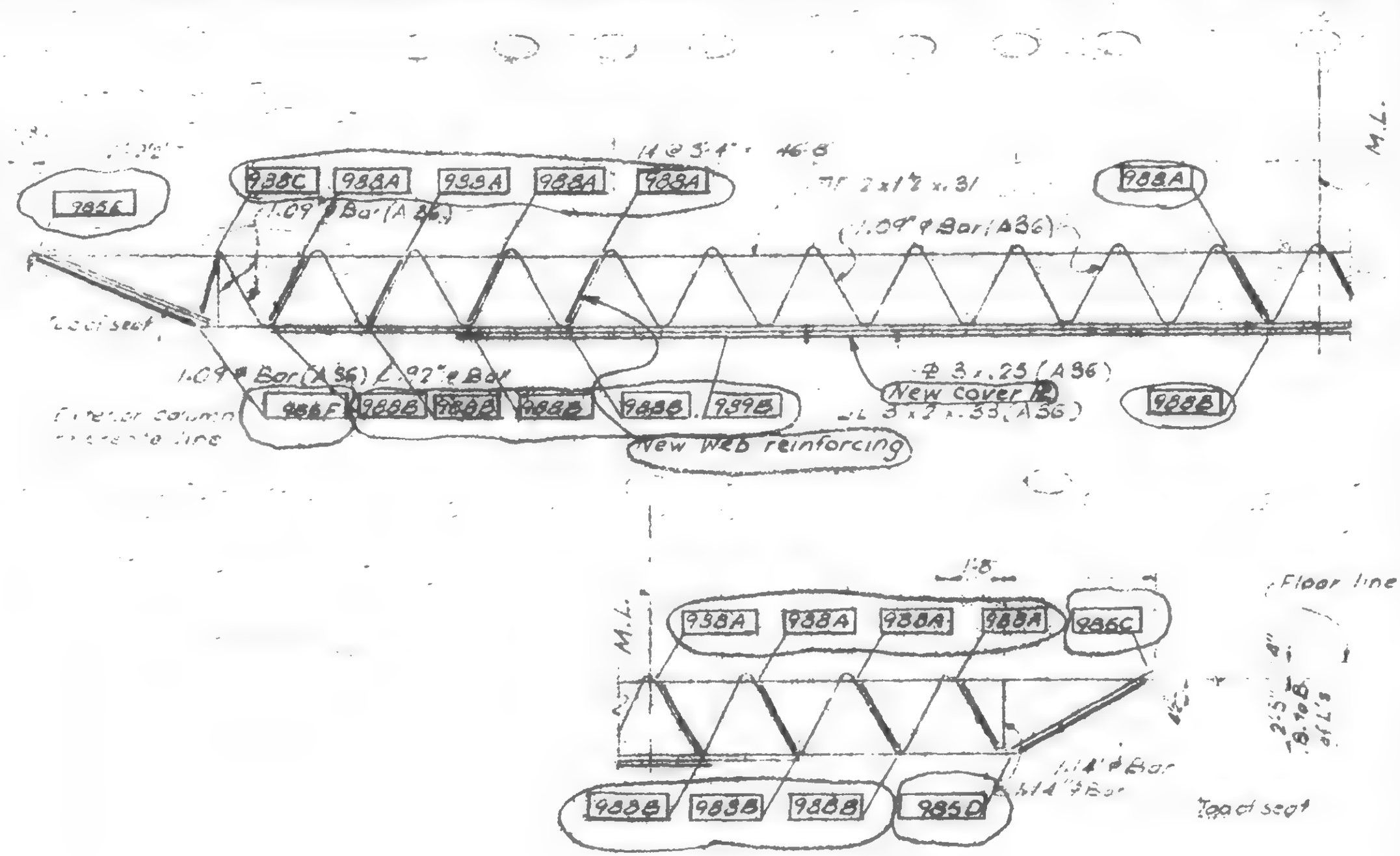

WAB

19-A-983.4

SKILLING HELLE CHRISTIANSEN ROBERTSON — Structural & Civil Engineers

WTC 4440.

PROJECT THE WORLD TRADE CENTER | TITLE FLOOR TRUSS C32TT-Fl. 106 | DATE 1-7-71

REVISIONS
1/27/71
7/30/71
Printed 10/6/71
5/9/79

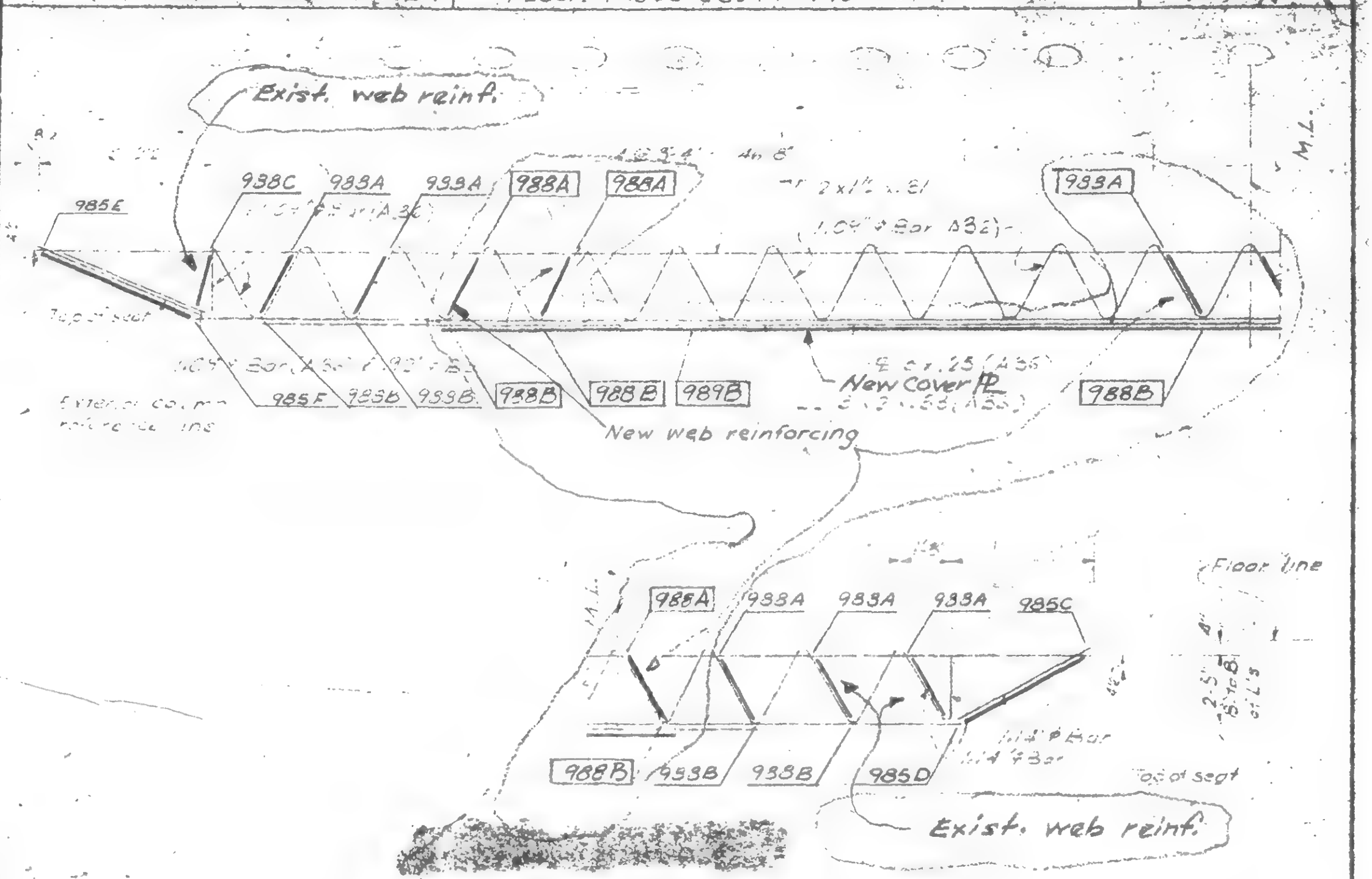

DRAWN

REVIEWED W. Brewer

LESLIE E. ROBERTSON — LICENSED PROFESSIONAL ENGINEER — NO. 34580 — STATE OF NEW YORK

19-A 83.44

SKILLING [illegible] Steuerwald & Civil Engineers

PROJECT THE WORLD TRADE CENTER | TITLE FLOOR TRUSS C.3272-Fl. 10 | DATE 1-7-71

REVISIONS

7/27/71
7/30/71
10/6/71
5/9/79

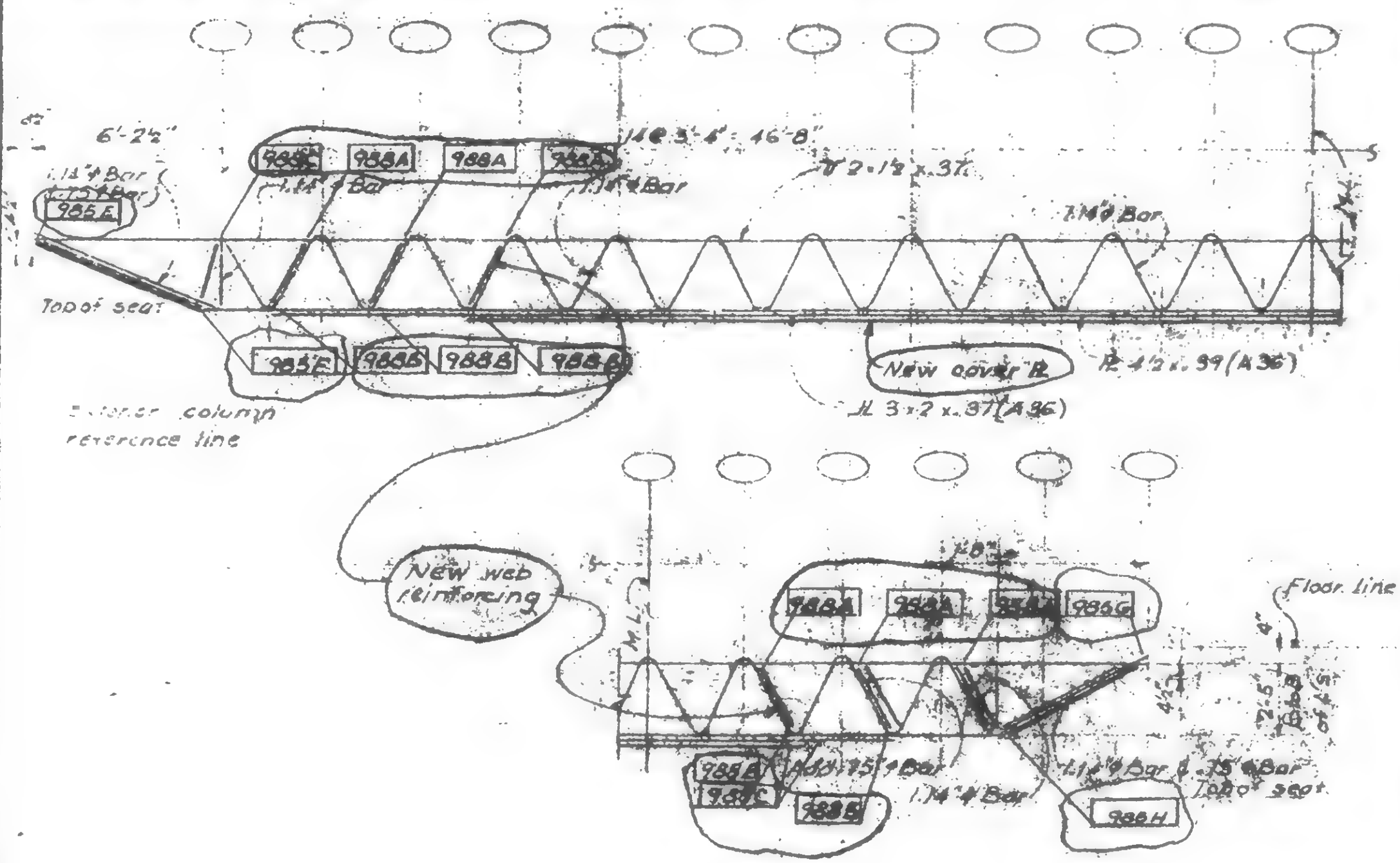

983.5

19-A-983.5

WAB

SKILLING, HELLE, CHRISTIANSEN, ROBERTSON — Structural & Civil Engineers

PROJECT: THE WORLD TRADE CENTER | TITLE: FLOOR TRUSS C3273 - Fl. 106 | DATE: 1-7-71

REVISIONS

- 7/7/71
- 7/30/71
- 10/6/71
- 5/9/79

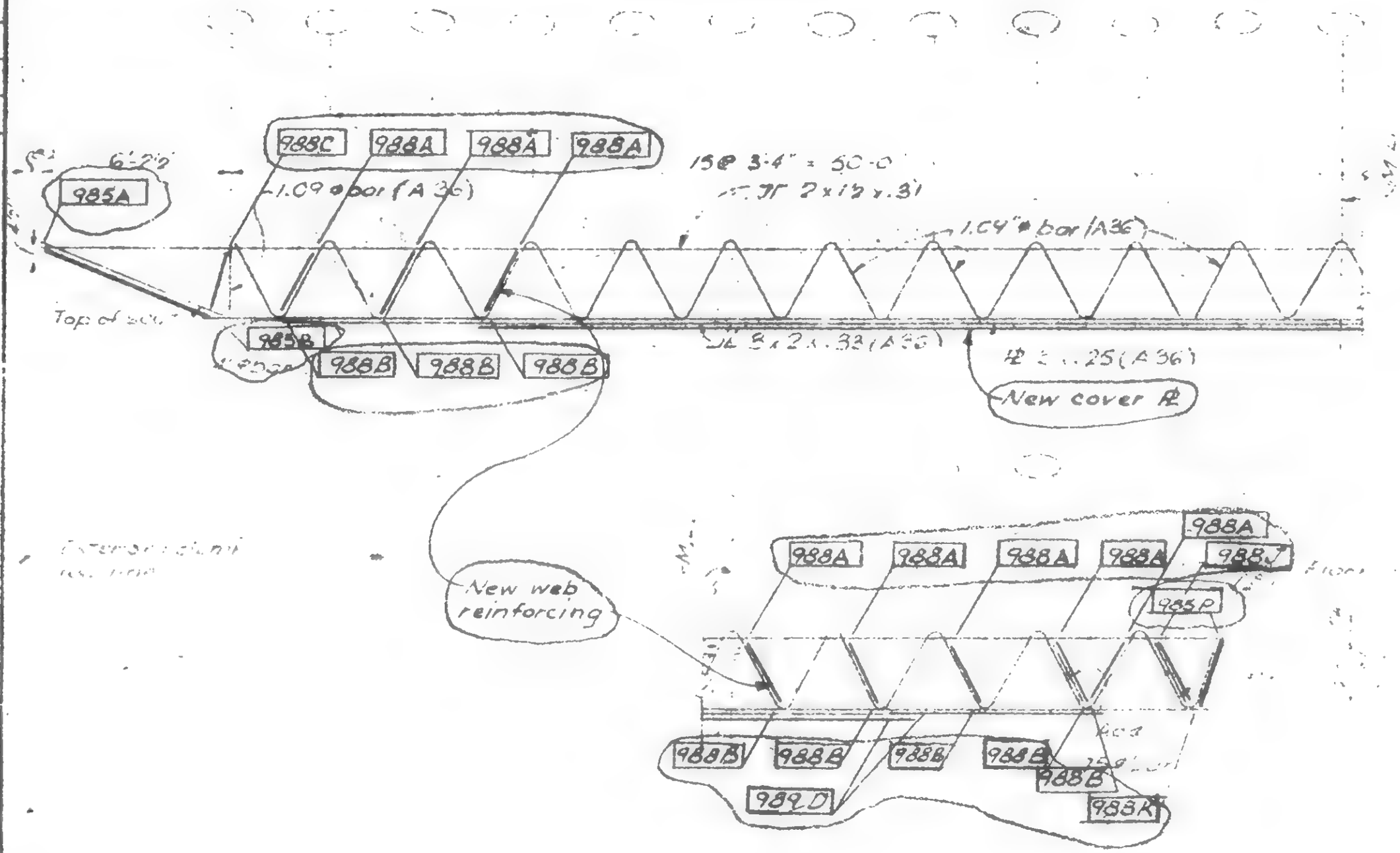

19A-983.6

SKILLING HELLE CHRISTIANSEN ROBERTSON — Structural & Civil Engineers

PROJECT THE WORLD TRADE CENTER | TITLE FLOOR TRUSS C 32 T9 - Fl. 106 | DATE 1-7-71

REVISIONS

1-7/71
7/30/71
10/6/71
5/9/79

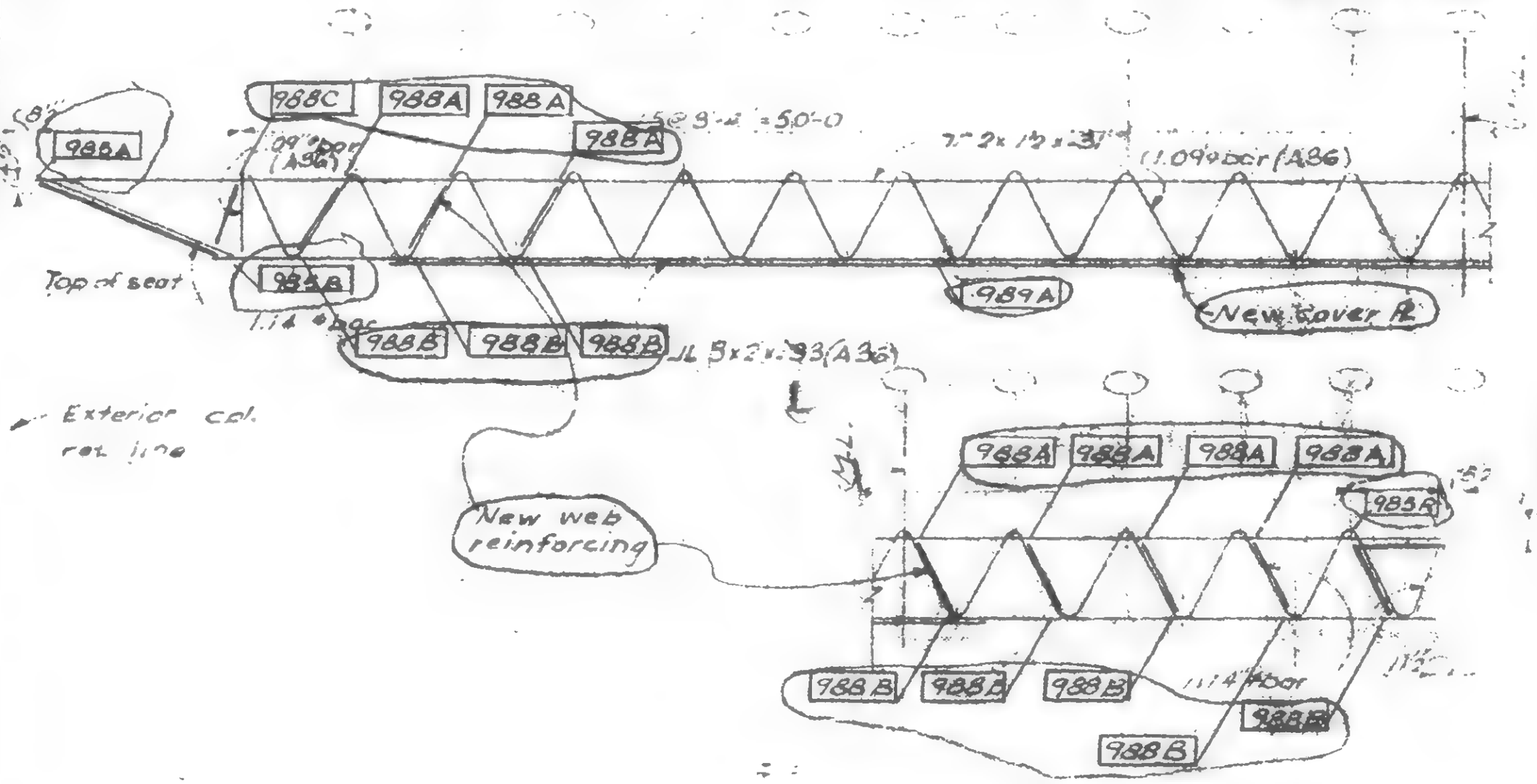

WdB

19-A-983.7

SKILLING HELLE CHRISTIANSEN ROBERTSON — Structural & Civil Engineers

PROJECT: THE WORLD TRADE CENTER | TITLE: FLOOR TRUSS C32T10 - Fl. 106 | DATE: 1-7-71

REVISIONS

7/7/71

7/30/71

10/6/71

5/9/79

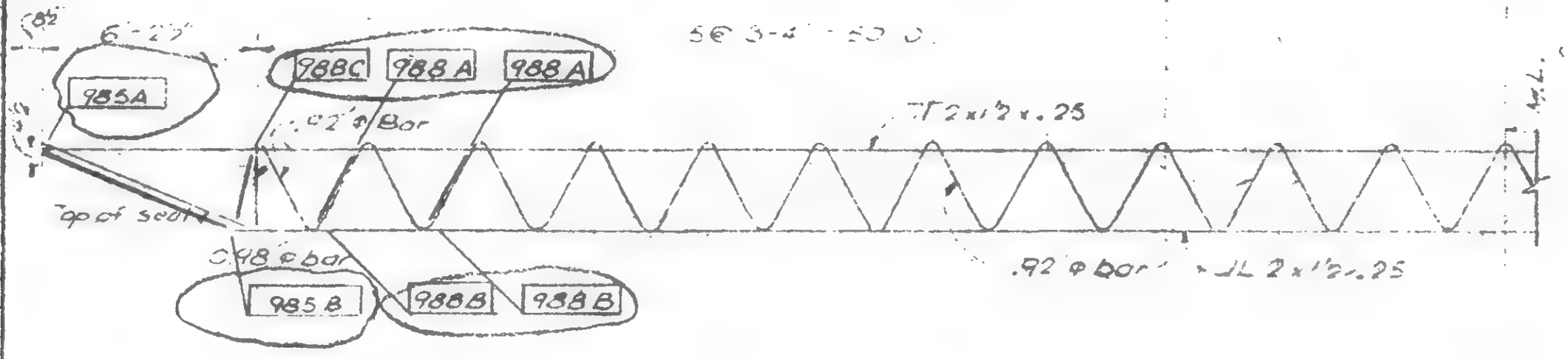

Face of columns

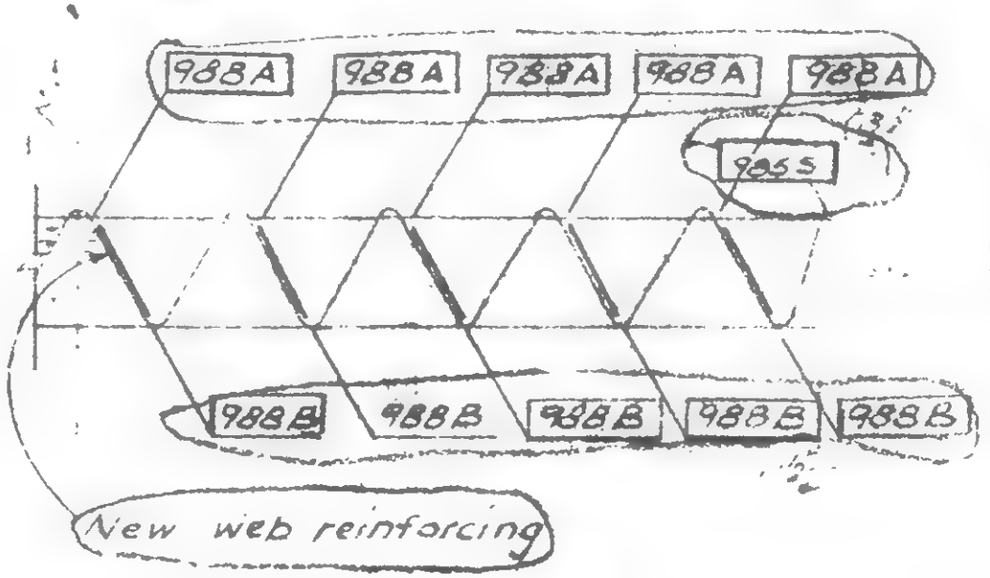

19-A-983.8

SKILLING HELLE CHRISTIANSEN ROBERTSON — Structural & Civil Engineers

PROJECT: THE WORLD TRADE CENTER | TITLE: FLOOR TRUSS C32 11. – Fl. 106 | DATE: 1-7-71

REVISIONS

7 7/71

7/30/71

10/6/71

5/9/79

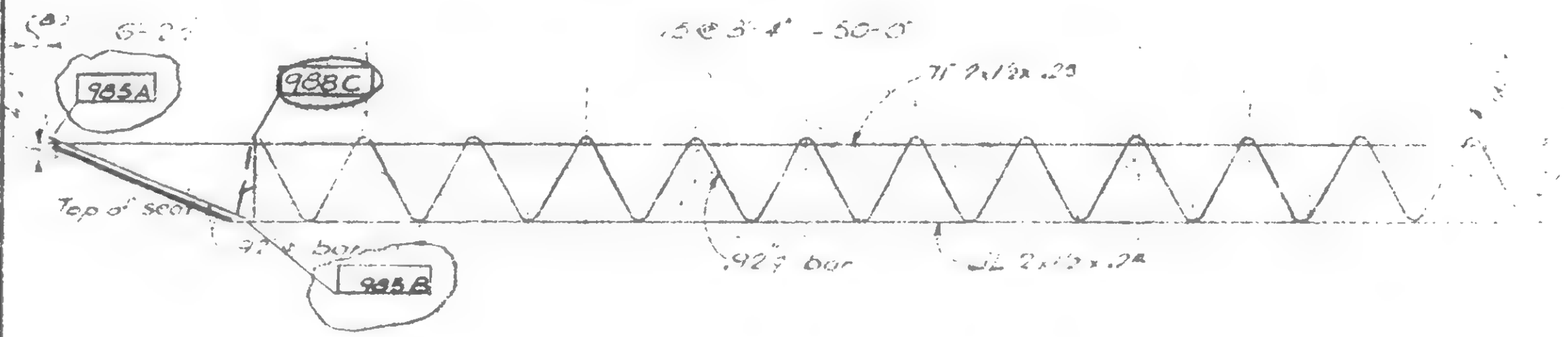

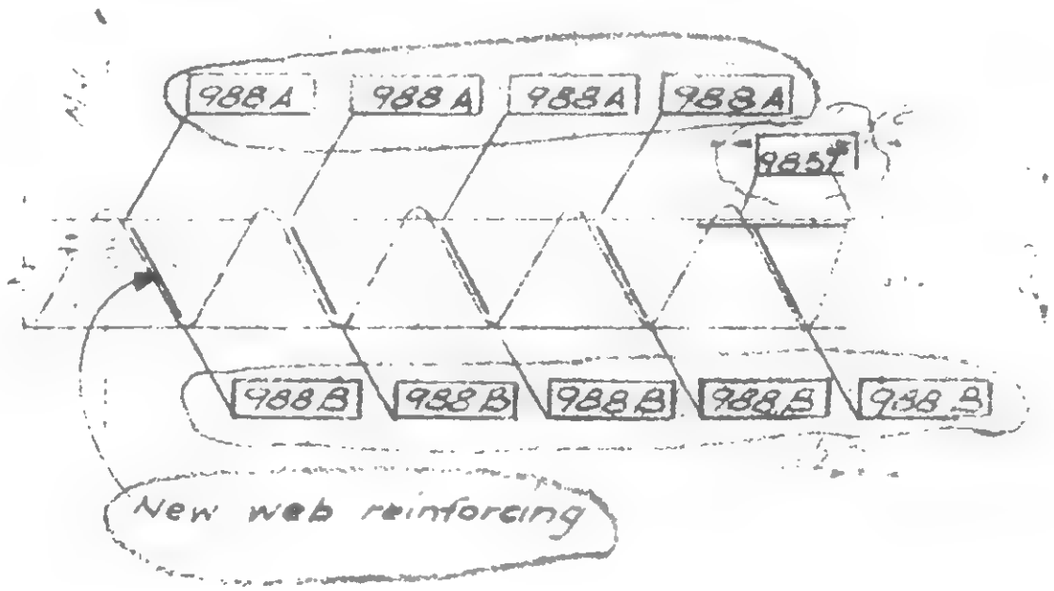

19-A-983.9

SKILLING, HELLE, CHRISTIANSEN, ROBERTSON — Structural & Civil Engineers

PROJECT: THE WORLD TRADE CENTER | TITLE: FLOOR TRUSS C32T4 - Fl. 106 | DATE: 1-7-71

REVISIONS
1-27-71
7/30/71
10/6/71
5/9/79

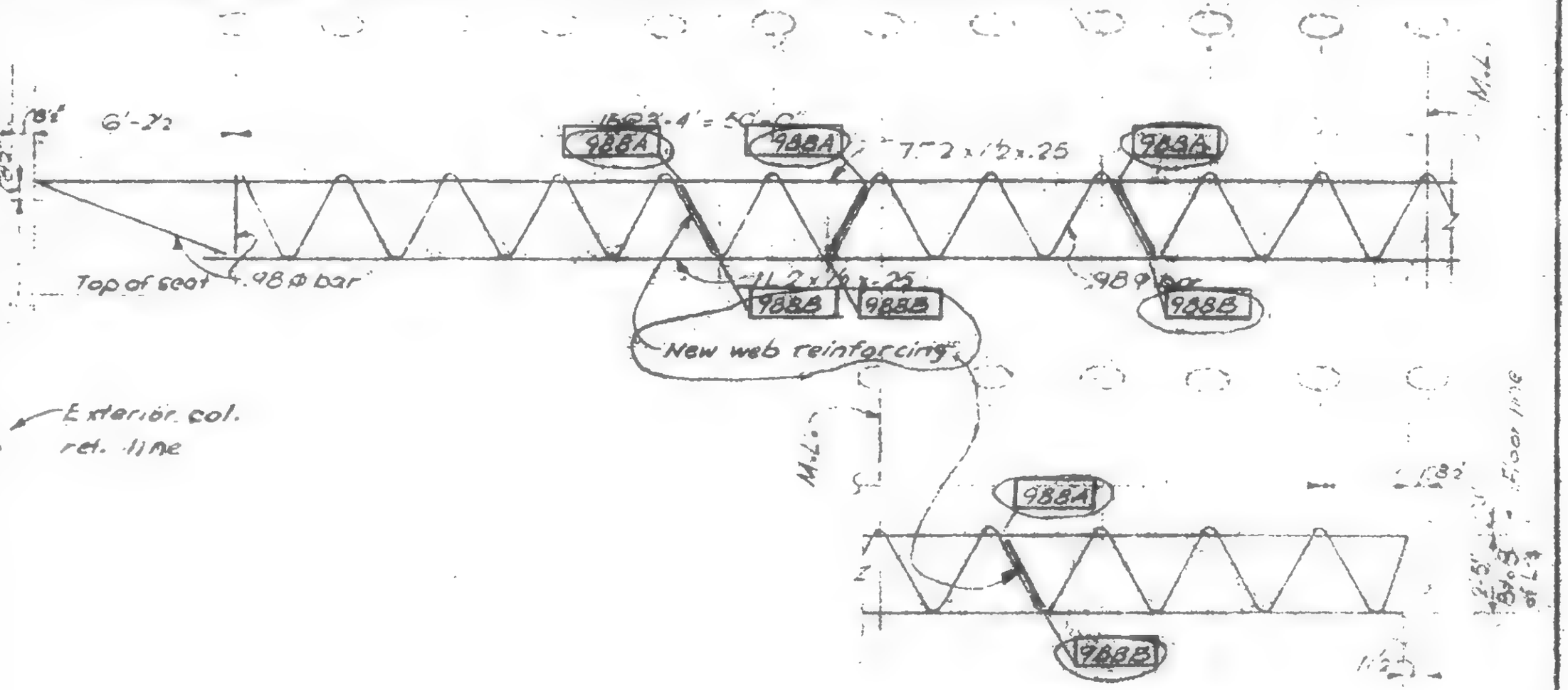

LESLIE E. ROBERTSON
NO. 34960
STATE OF NEW YORK

19-A-983.10

SKILLING, HELLE CHRISTIANSEN ROBERTSON — Structural & Civil Engineers

PROJECT: THE WORLD TRADE CENTER | TITLE: FLOOR TRUSS C32713 & T6 – Fl. 106 | DATE: 1-7-71

REVISIONS

1-27-71
7/30/71
10/6/71
5/9/79

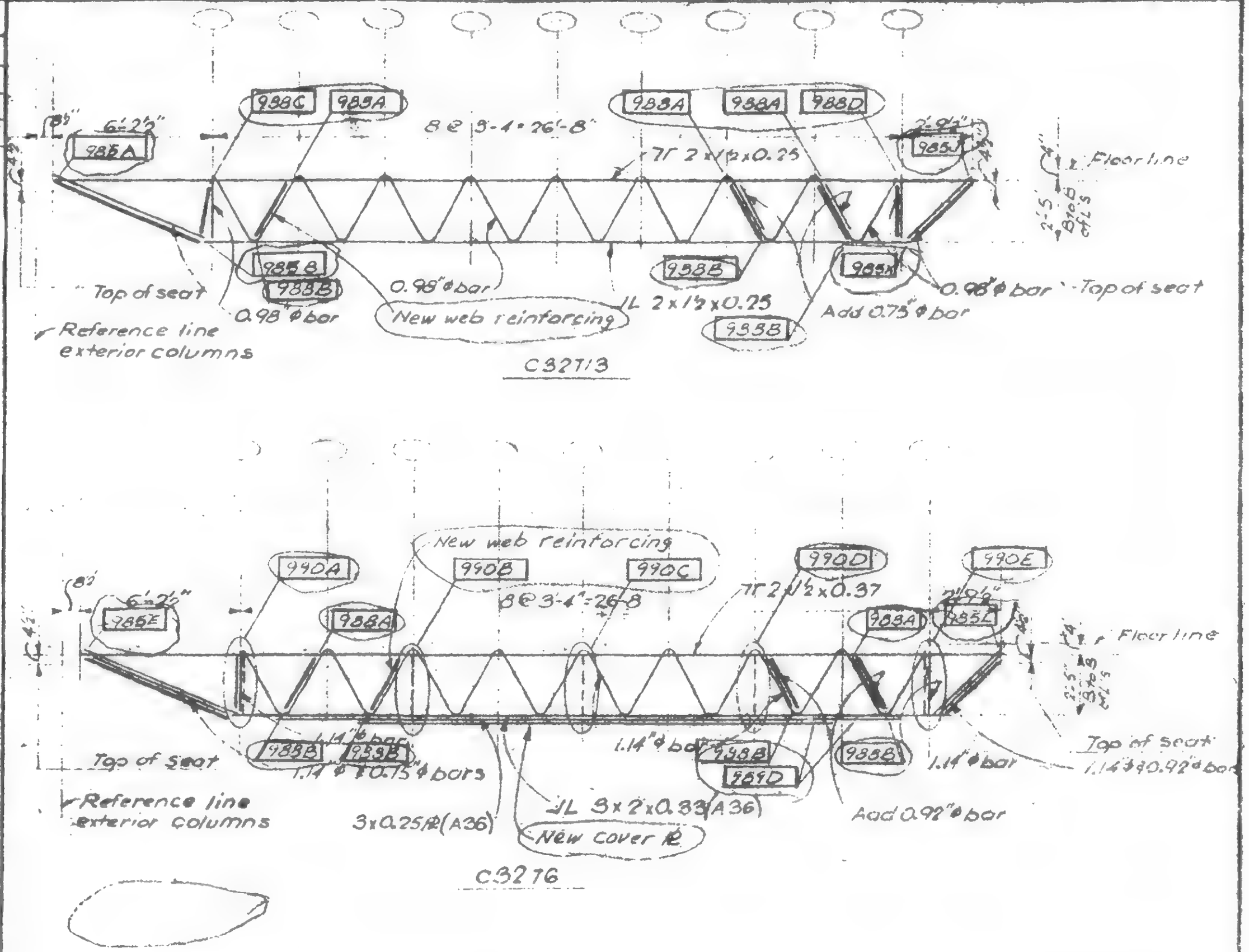

19-A-983.11

SKILLING, HELLE, CHRISTIANSEN ROBERTSON — Structural & Civil Engineers

PROJECT: THE WORLD TRADE CENTER | TITLE: FLOOR TRUSS C32T5 & C32T12 - Fl. 106 | DATE: 1-7-71

REVISIONS

11/27/71
7/30/71
10/6/71
5/9/79

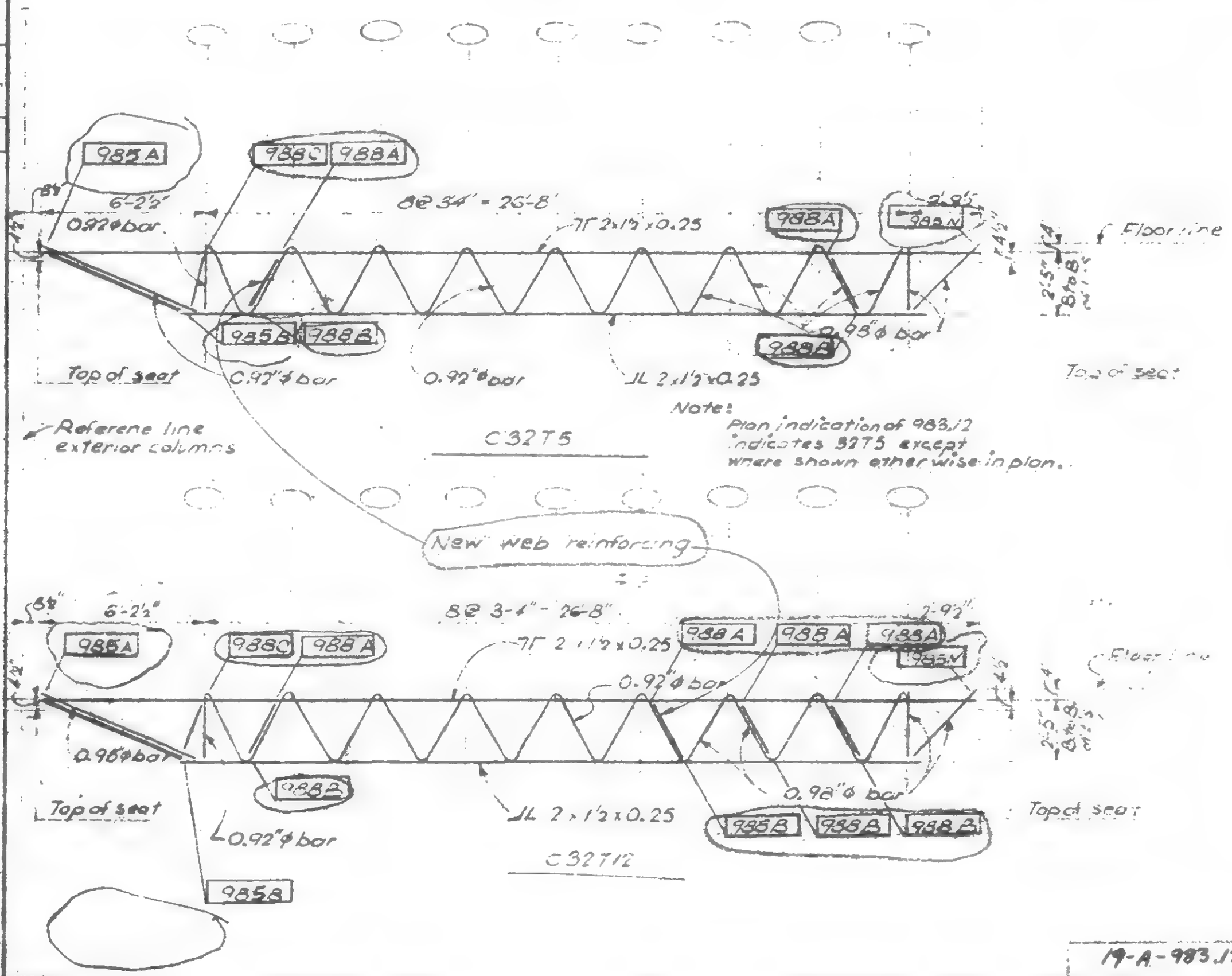

19-A-983.12

SKILLING, HELLE, CHRISTIANSEN, ROBERTSON — Structural & Civil Engineers

WTC 444.00

PROJECT THE WORLD TRADE CENTER | TITLE FLOOR TRUSS - FLOOR 106 | DATE 1-7-71

VISIONS

1/27/71
7/30/71
10/6/71
5/9/79

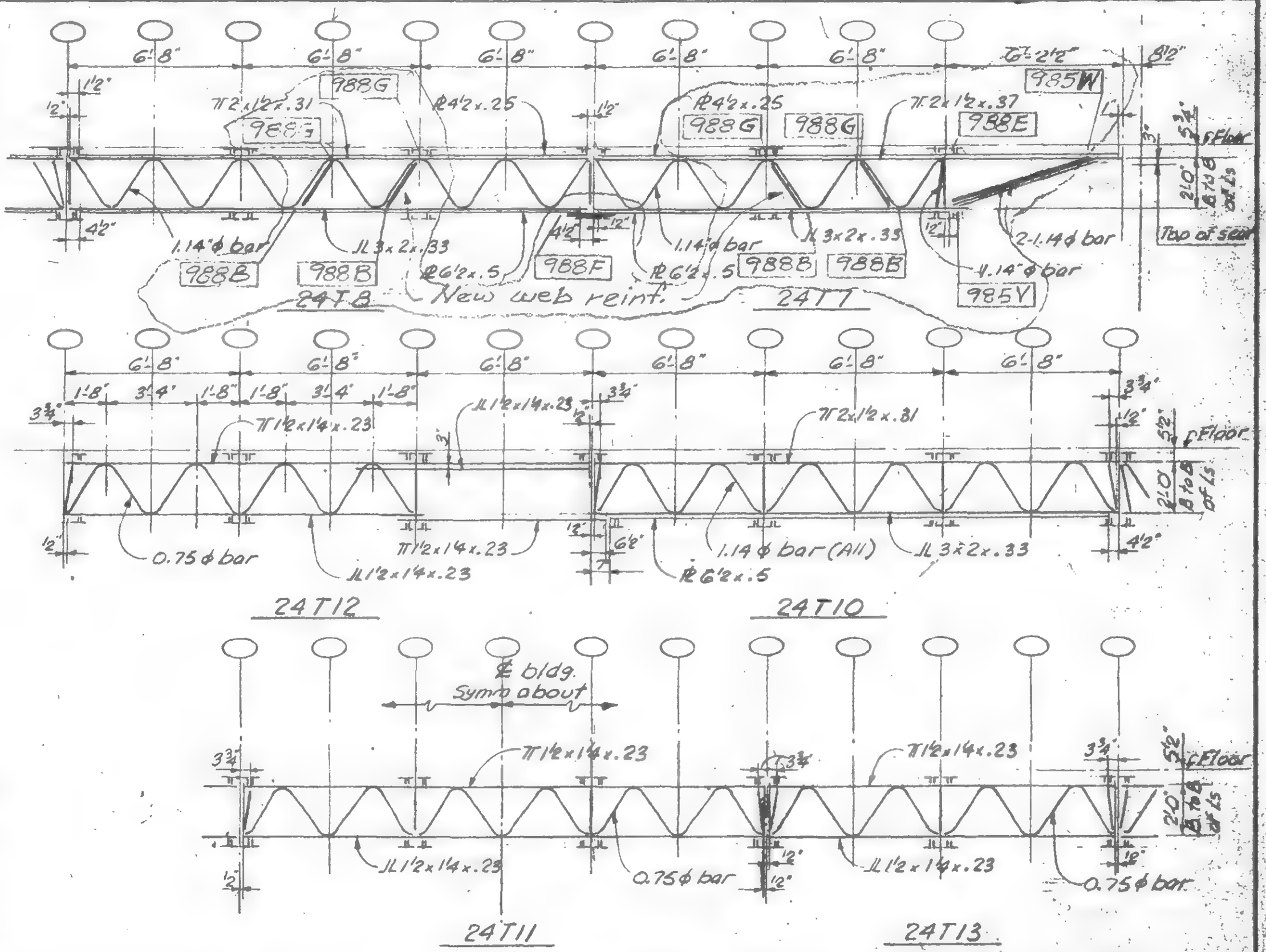

LICENSED PROFESSIONAL ENGINEER — LESLIE E. ROBERTSON — No. 34360 — UNIVERSITY OF THE STATE OF NEW YORK

SIGNED

DRAWN A. FRANQUI

REVIEWED

19-A-984.1

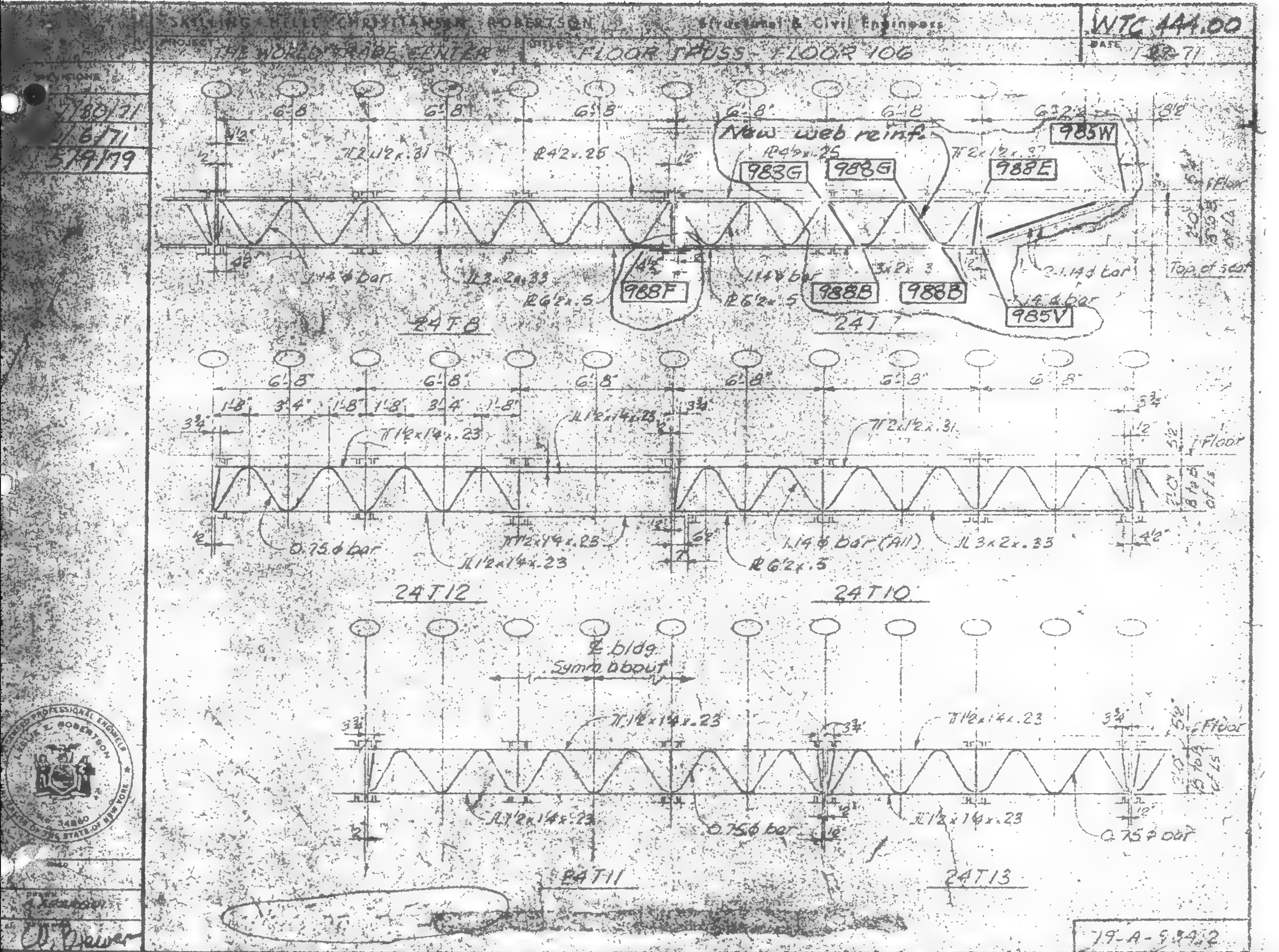
SKILLING · HELLE · CHRISTIANSEN · ROBERTSON
Structural & Civil Engineers
WTC 444.00
THE WORLD TRADE CENTER
FLOOR TRUSS - FLOOR 106
New web reinf.
983G
988G
988E
985W
988F
988B
985V
24T8
24T7
24T12
24T10
24T11
24T13
℄ bldg.
Symm about
Floor
Top of slab
1.14 ф bar
0.75 ф bar
1.14 ф bar (All)
19-A-534.2

SKILLING HELLE CHRISTIANSEN ROBERTSON — Structural & Civil Engineers

WTC 444.00

PROJECT: THE WORLD TRADE CENTER

TITLE: FLOOR TRUSS - FLOOR 106

DATE: 1-27-71

REVISIONS

7/30/71

10/6/71

5/9/79

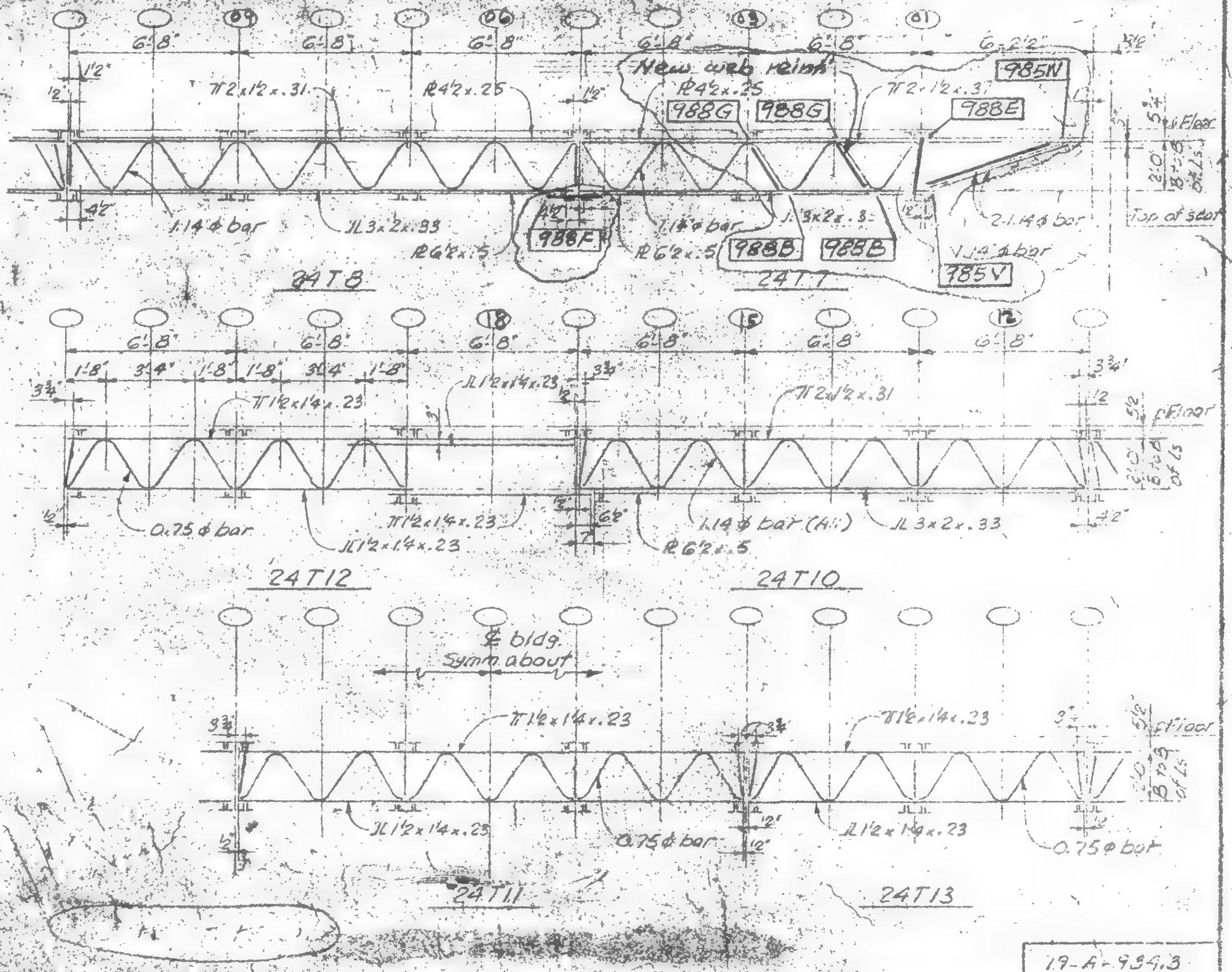

19-A-934.3

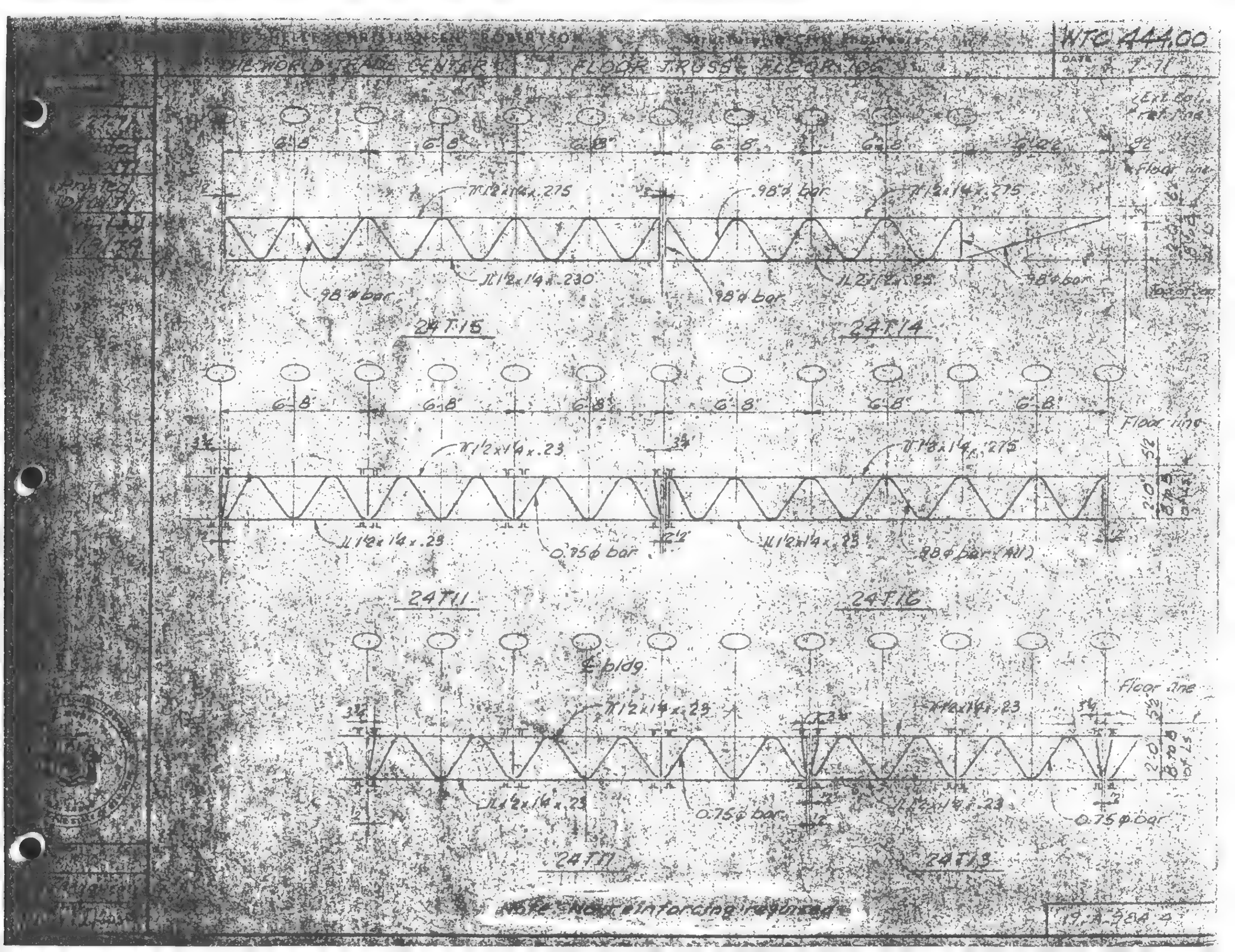

WTC 444.00
THE WORLD TRADE CENTER
FLOOR TRUSS - FLOOR 106
6'-8"
Floor line
.98 ϕ bar
24T15
24T14
24T11
24T16
24T17
24T13
℄ bldg.
0.75 ϕ bar
Note: No reinforcing required

SKILLING, HELLE, CHRISTIANSEN, ROBERTSON — Structural & Civil Engineers

WTC 444.00

PROJECT THE WORLD TRADE CENTER

TITLE FLOOR TRUSS - FLOOR 106

DATE 1-7-71

REVISIONS

1/27/71
7/30/71
10/6/71
5/9/79

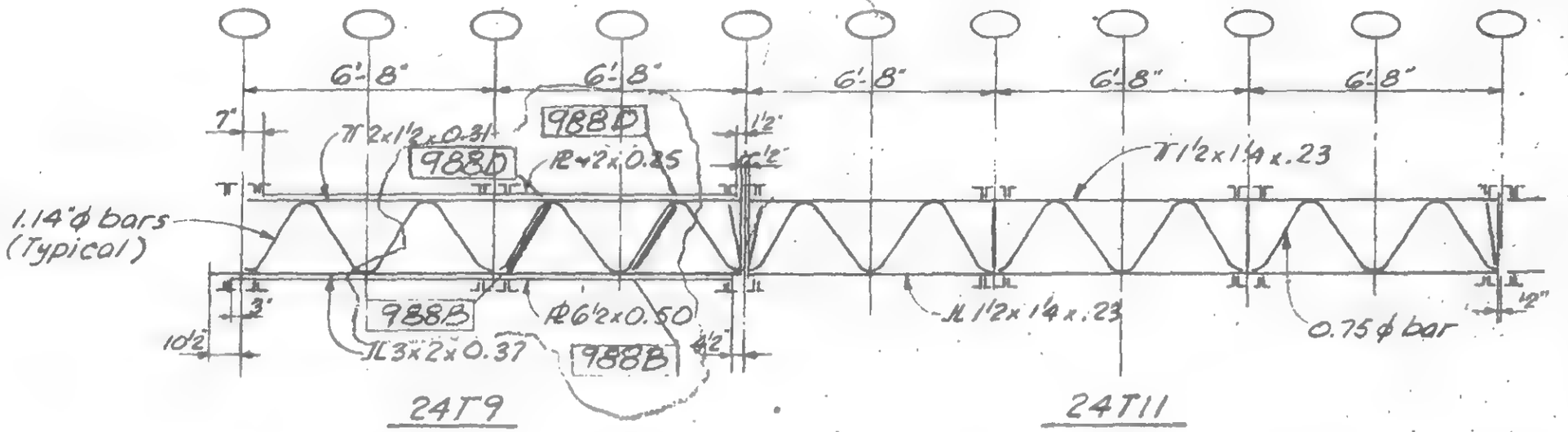

24T9 24T11

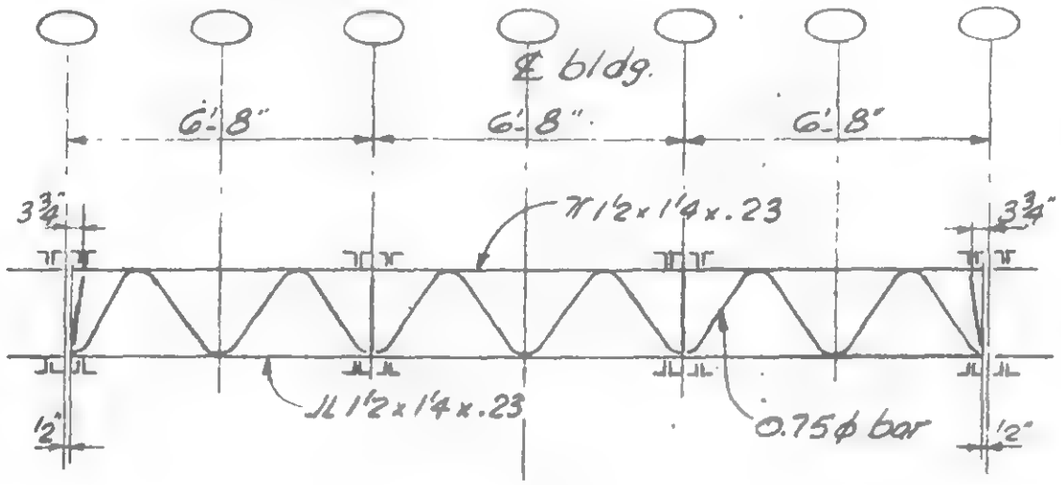

24T11

LICENSED PROFESSIONAL ENGINEER
LESLIE E. ROBERTSON
No 34960
UNIVERSITY OF THE STATE OF NEW YORK

SIGNED

DRAWN A. FRANQUI

REVIEWED

19-A-984.5

SKILLING HELLE CHRISTIANSEN ROBERTSON — Structural & Civil Engineers | WTC 444.00

PROJECT: THE WORLD TRADE CENTER — FLOOR TRUSS — FLOOR 106 | 1-27-71

Printed 1/30/71

Printed 10/6/71

Printed 5/9/79

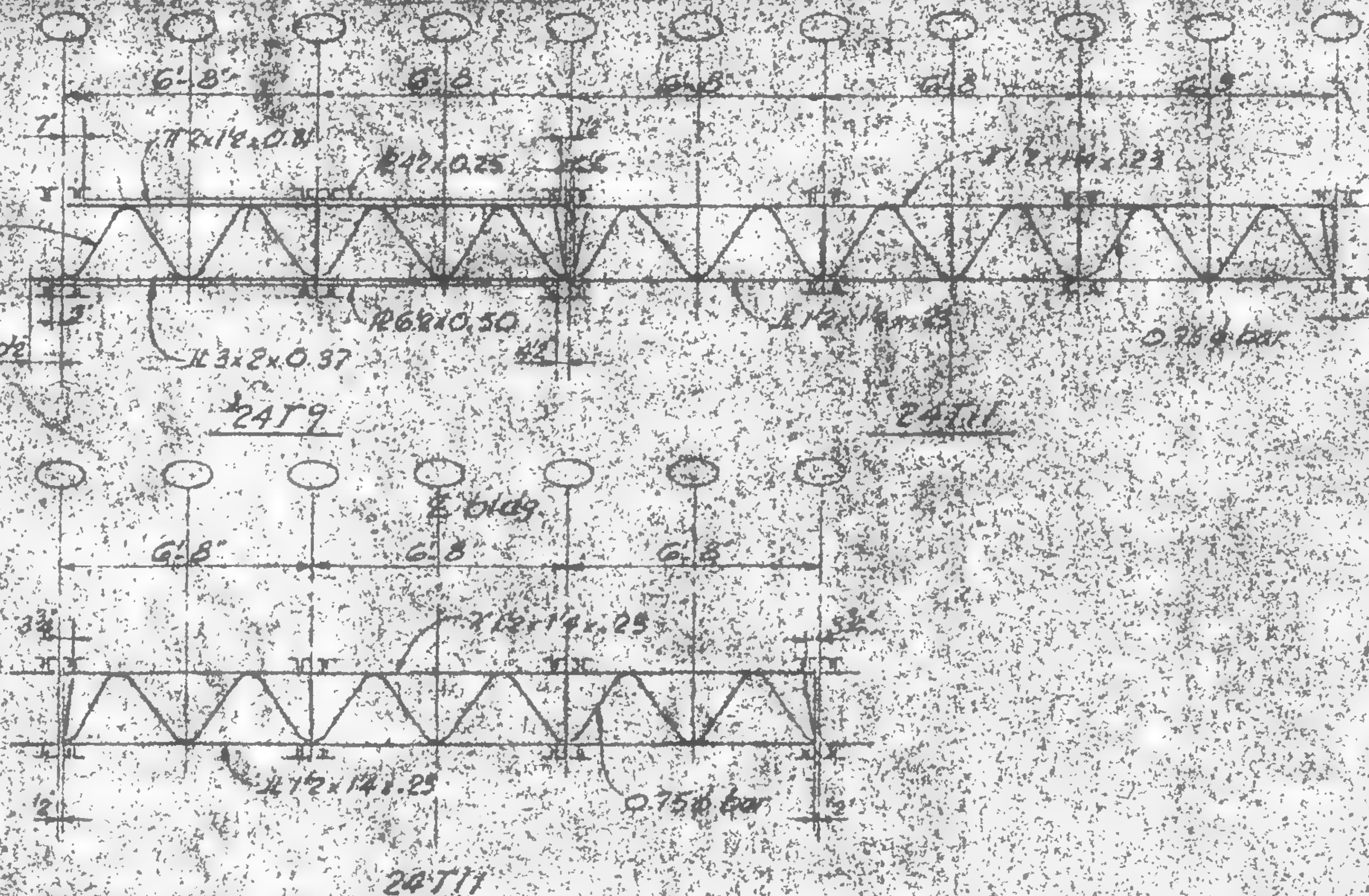

Note: No reinforcing required

17-A-784.6

SKILLING, HELLE, CHRISTIANSEN, ROBERTSON — Structural & Civil Engineers

PROJECT THE WORLD TRADE CENTER | TITLE TRUSS DETAILS - FLOOR 106 | DATE 5-9-79

REVISIONS

AT BRIDGING TRUSS

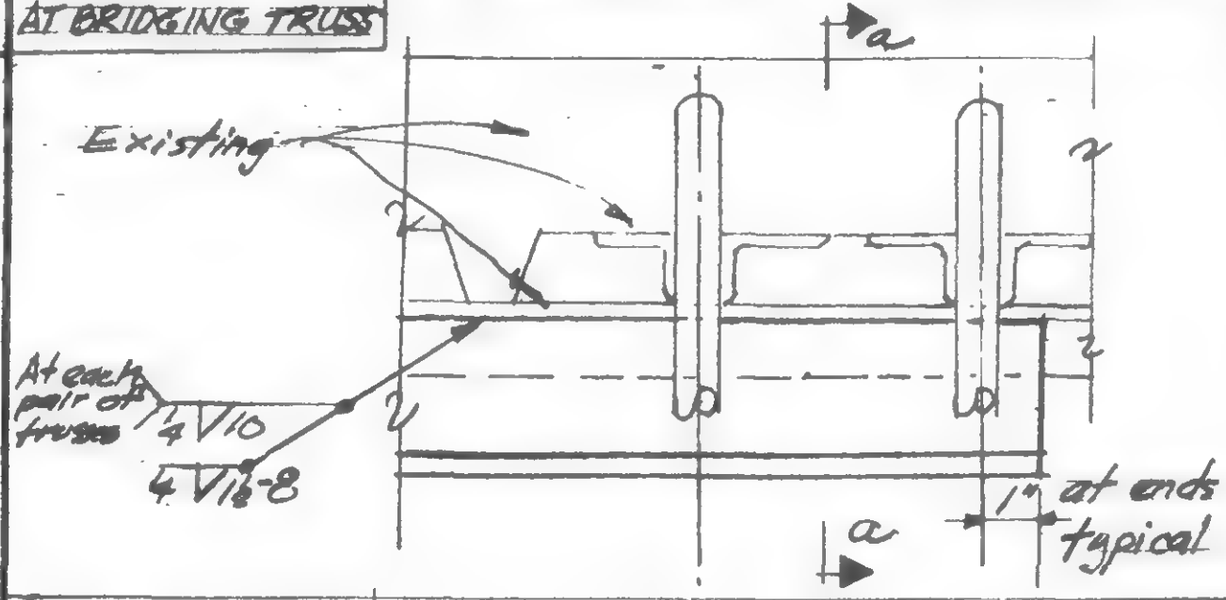

a

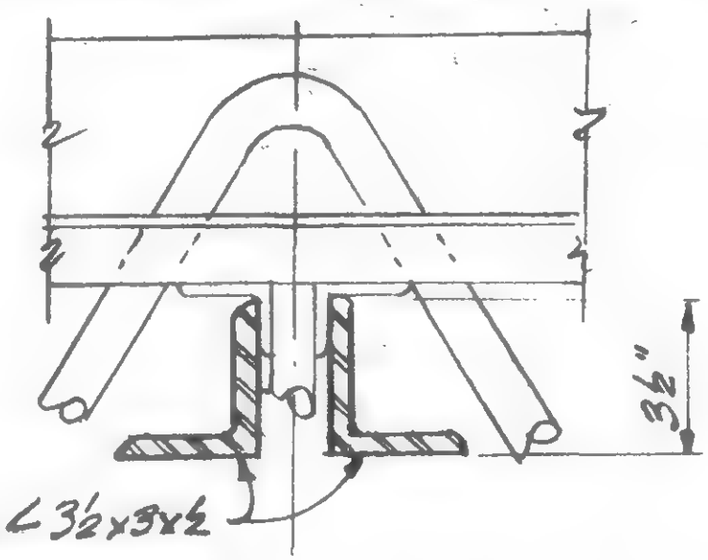

AT DECK ANGLE

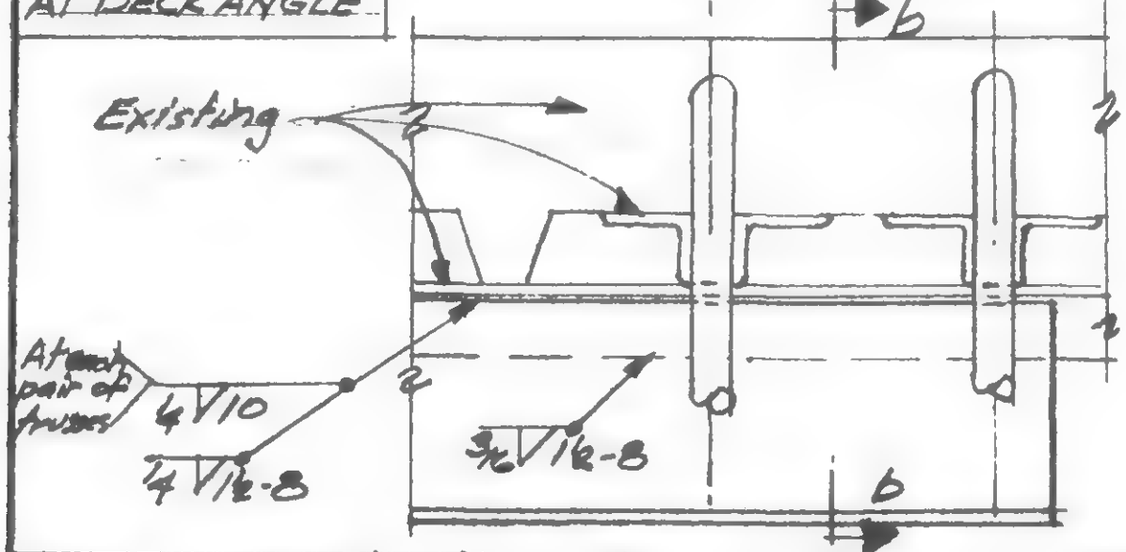

b

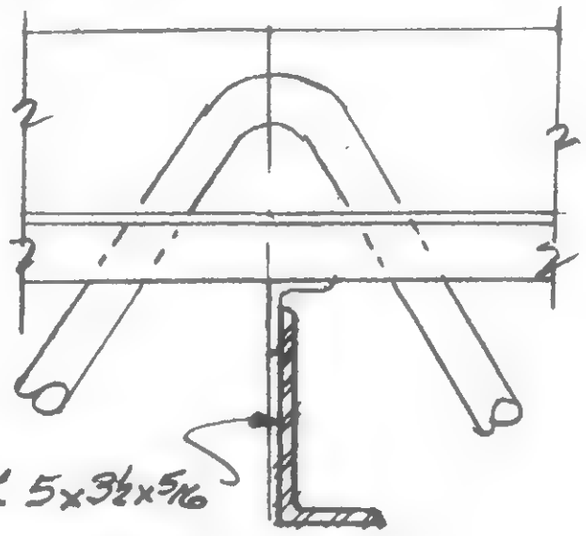

AT OTHER TRAVEL PTS.

c

LICENSED PROFESSIONAL ENGINEER — LESLIE E. ROBERTSON — No. 34300 — UNIVERSITY OF THE STATE OF NEW YORK

DESIGNED

DRAWN

REVIEWED WEB

19-A-984.7

REVISIONS	
10/6/79	2
10/16/79	3
1/30/79	4
1/30/80	5

SKILLING, HELLE, CHRISTIANSEN, ROBERTSON — Structural & Civil Engineers

WTC[illegible]

PROJECT THE WORLD TRADE CENTER

TITLE DUMBWAITER PIT SUPPORT - FLOOR 106

DATE 5-9-79

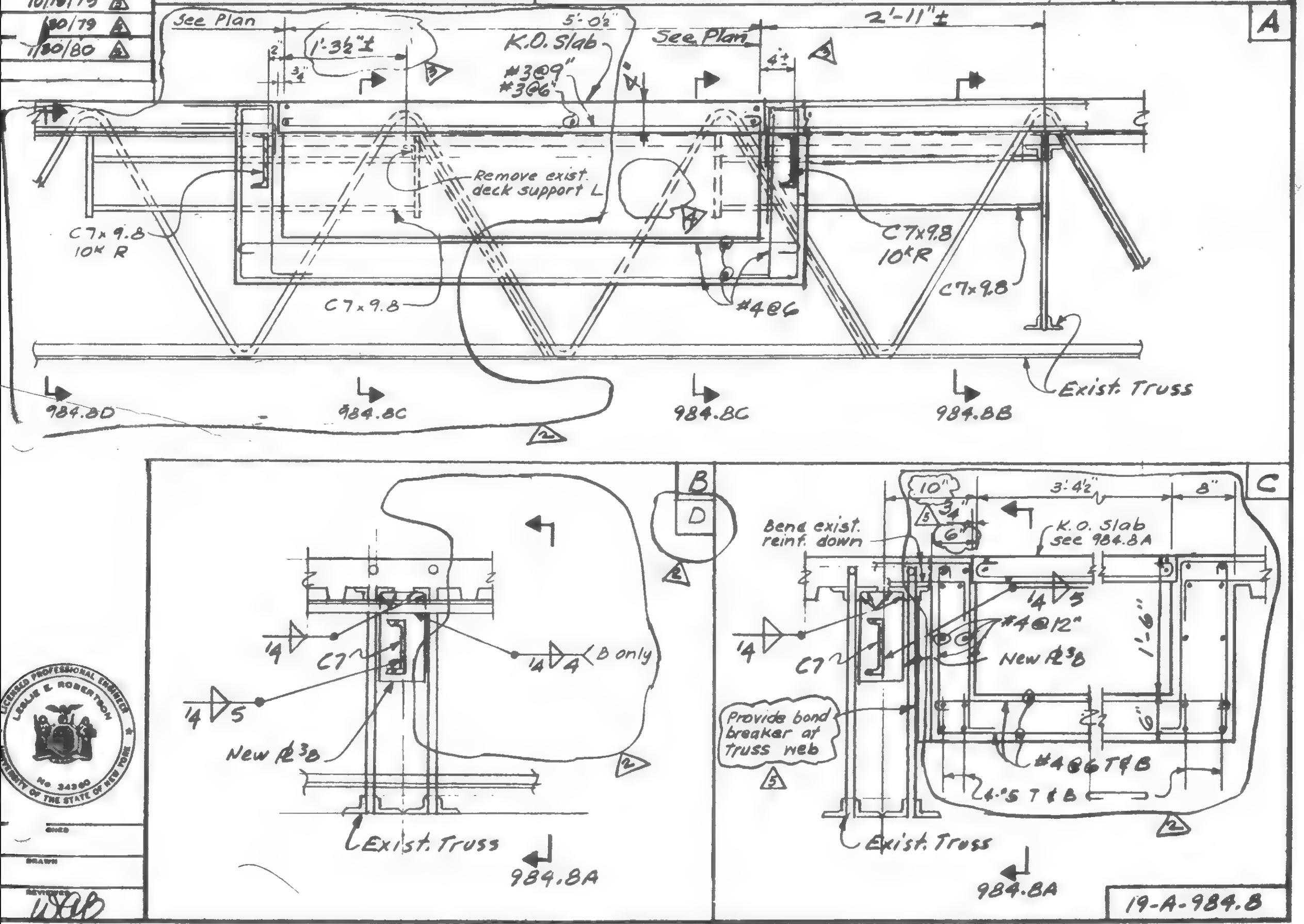

LICENSED PROFESSIONAL ENGINEER LESLIE E. ROBERTSON No. 34360 UNIVERSITY OF THE STATE OF NEW YORK

SIGNED

DRAWN

REVIEWED WAB

19-A-984.8

SKILLING, HELLE, CHRISTIANSEN; ROBERTSON — Structural & Civil Engineers

PROJECT: THE WORLD TRADE CENTER | TITLE: TRUSS DETAILS - FL 106 | DATE: 1-7-71

REVISIONS
1/21/71
7/30/71
10/6/71
Printed 5/9/79

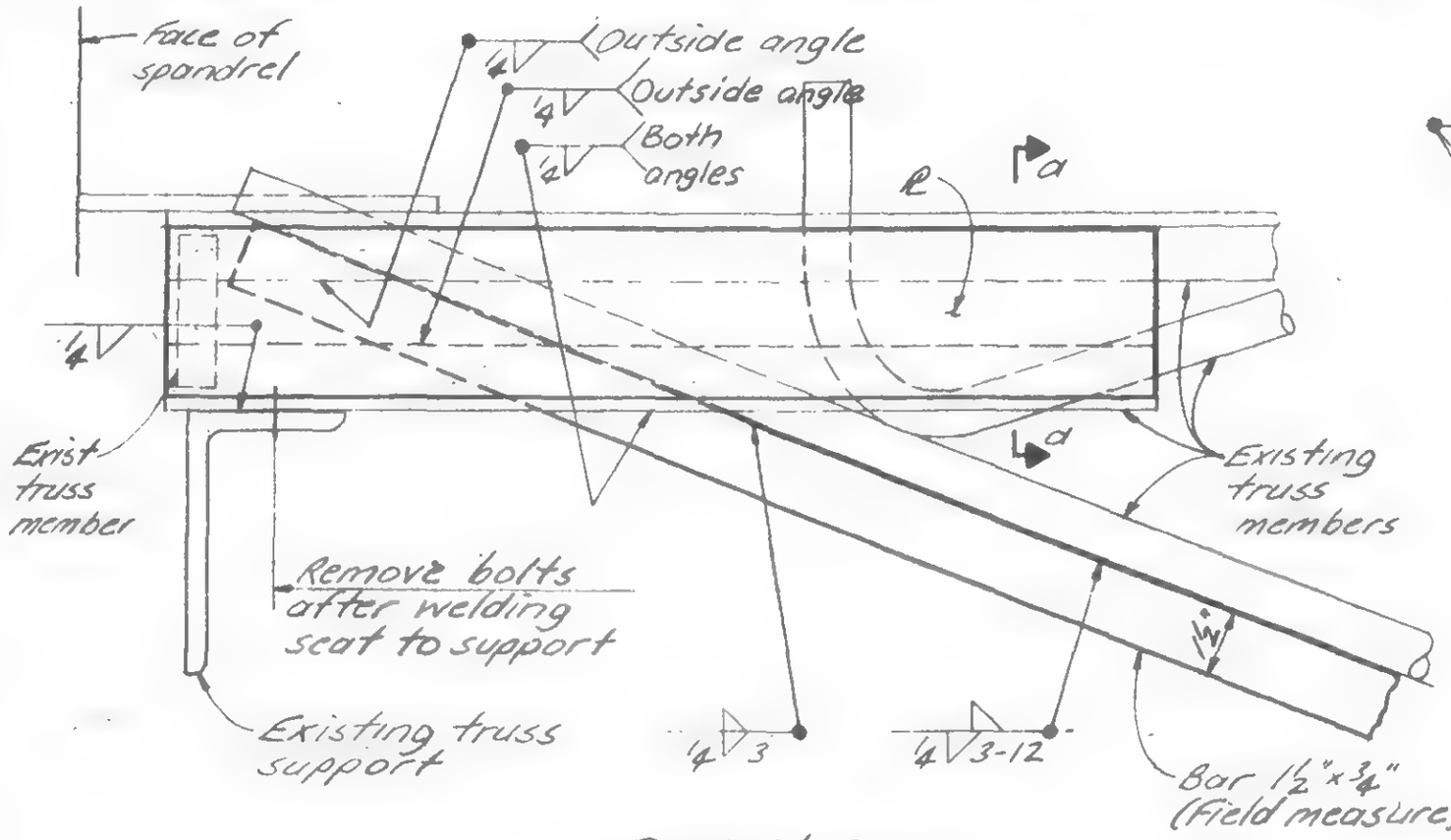

Detail 985A

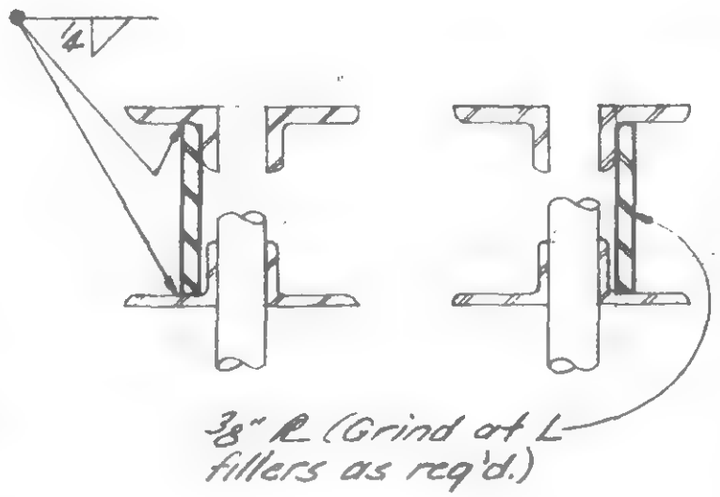

Section a-a

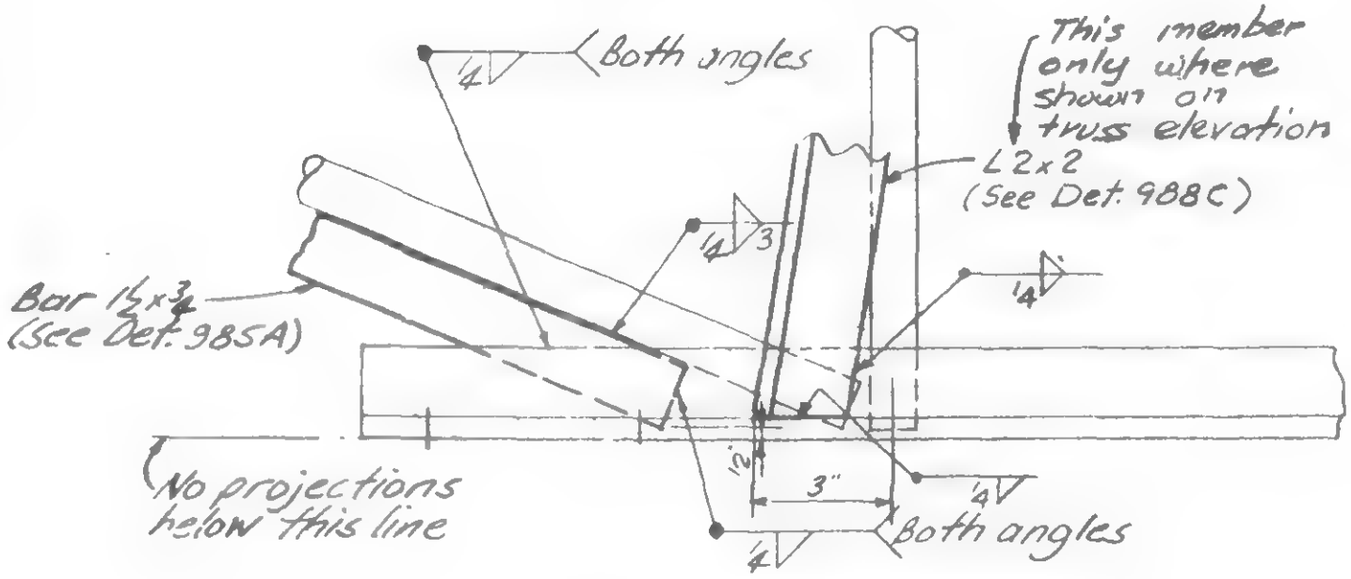

Detail 985B

Notes:

1. All added material to be A36 unless otherwise noted.
2. If parts to be joined with fillet welds cannot be brought into direct contact, the fillet weld shall be increased in size above that indicated in the drawings. The increase in size shall be equal to or greater than the gap.
3. L 3x2 deck supports that are disconnected to make the required repairs shall be re-attached after the repair is completed.

LICENSED PROFESSIONAL ENGINEER — LESLIE E. ROBERTSON — No. 34980 — UNIVERSITY OF THE STATE OF NEW YORK

SIGNED

DRAWN J. Adams

REVISED W. Brewer

19-A-985.1

M9

SKILLING, HELLE, CHRISTIANSEN, ROBERTSON — Structural & Civil Engineers

PROJECT: THE WORLD TRADE CENTER | TITLE: TRUSS DETAILS - FL 106 | DATE: 1-7-71

REVISIONS
- 6/27/71
- 7/30/71
- 10/6/71
- Printed 5/9/79

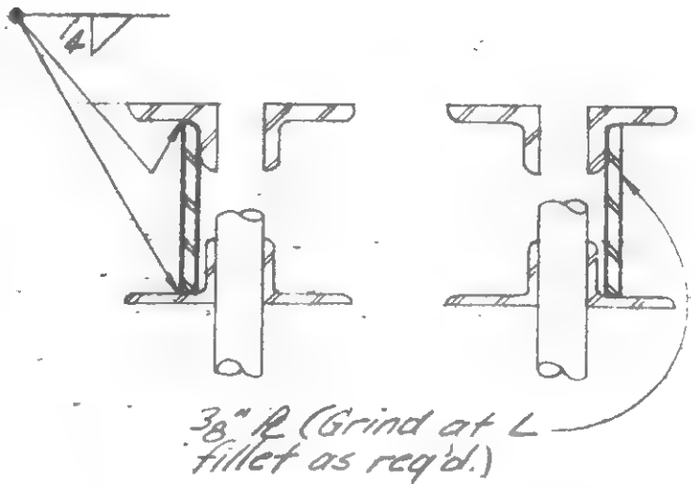

Section a-a

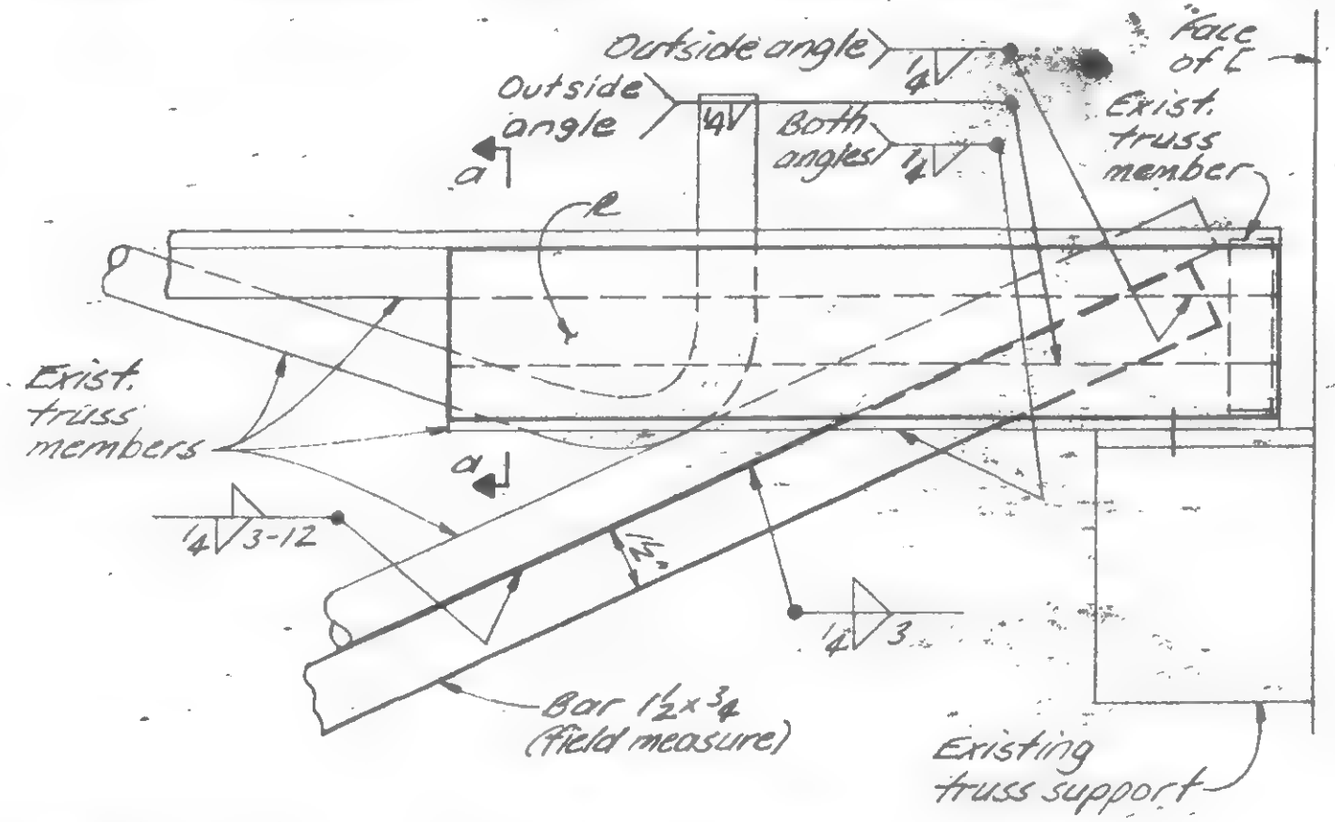

Detail 985C

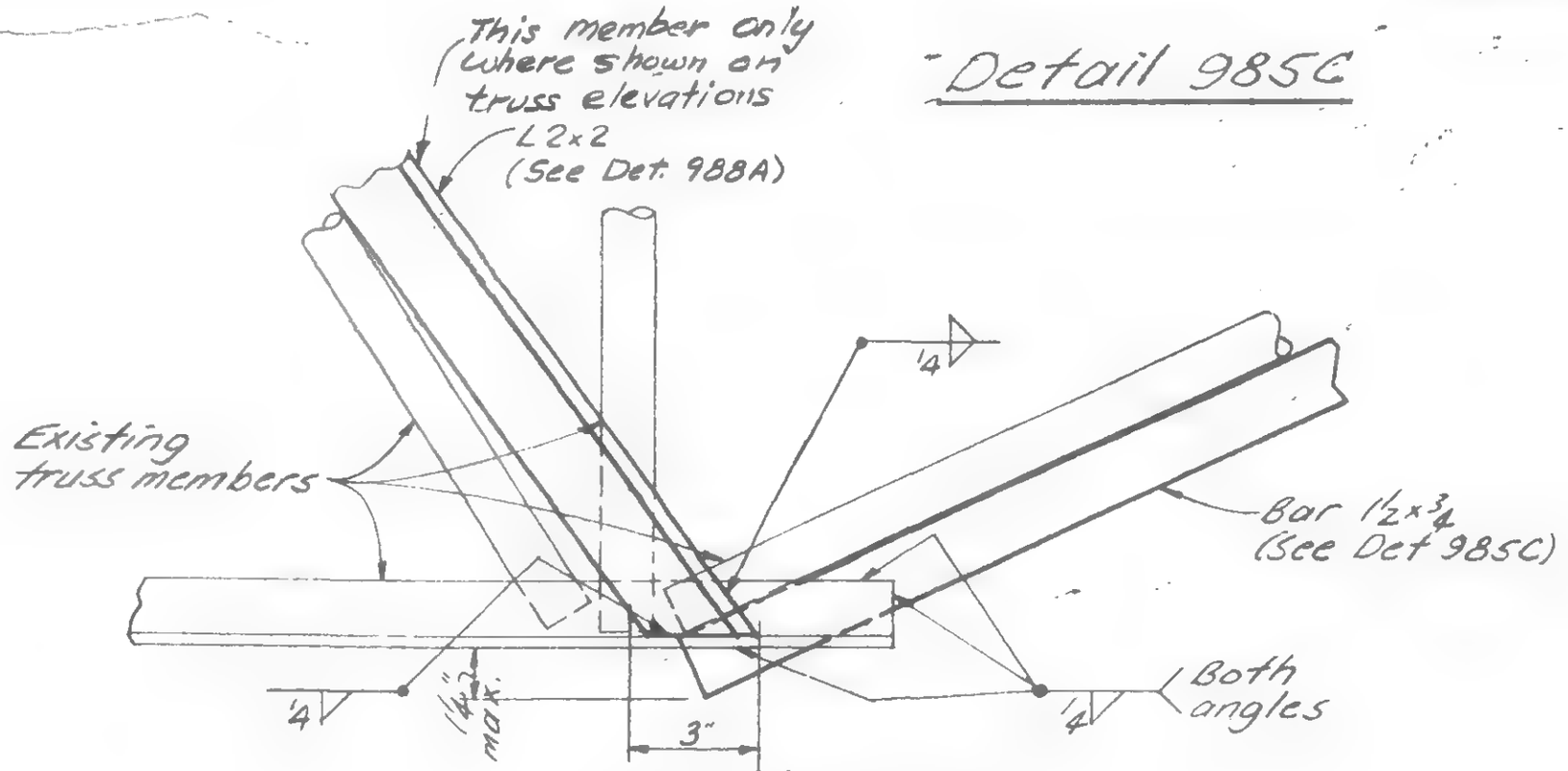

Detail 9850

SIGNED

DRAWN

REVIEW

19-A-985.2

SKILLING, HELLE, CHRISTIANSEN, ROBERTSON — Structural & Civil Engineers

PROJECT: THE WORLD TRADE CENTER | TITLE: TRUSS DETAILS - FL 106 | DATE: 1-7-71

REVISIONS
1/27/71
7/30/71
10/6/71
Printed 5/9/79

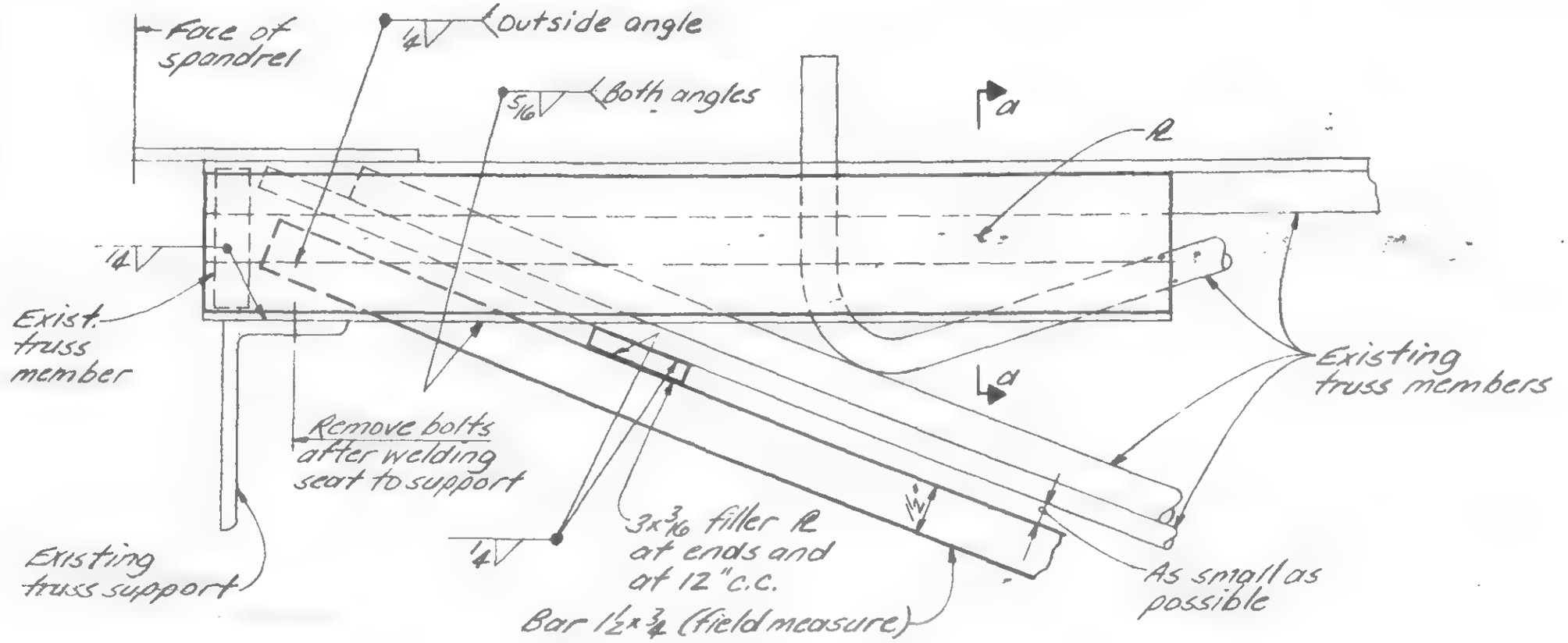

Detail 985E

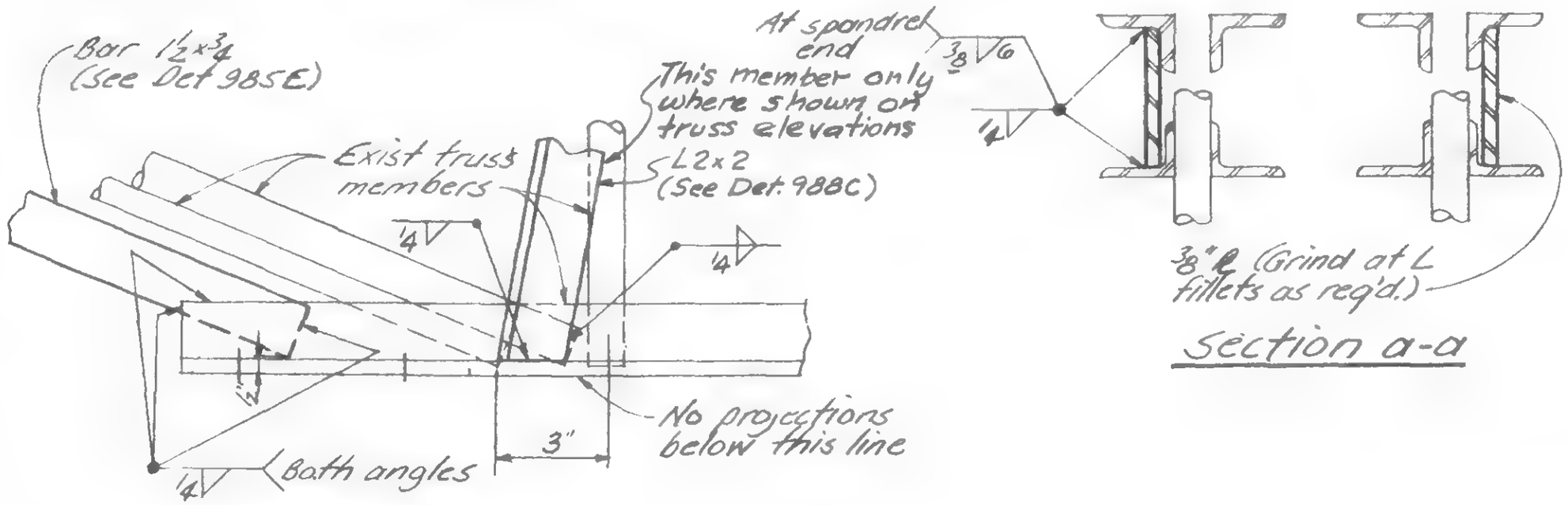

Detail 985F

Section a-a

LICENSED PROFESSIONAL ENGINEER — LESLIE E. ROBERTSON — No 34360 — UNIVERSITY OF THE STATE OF NEW YORK

SIGNED

DRAWN J. Adams

REVIEWED W. Brown

19-A-985.3

SKILLING HELLE CHRISTIANSEN ROBERTSON — Structural & Civil Engineers

PROJECT: THE WORLD TRADE CENTER | TITLE: TRUSS DETAILS - FL 106 | DATE: 1-7-71

DIVISIONS
11/21/71
7/30/71
10/6/71
5/9/79

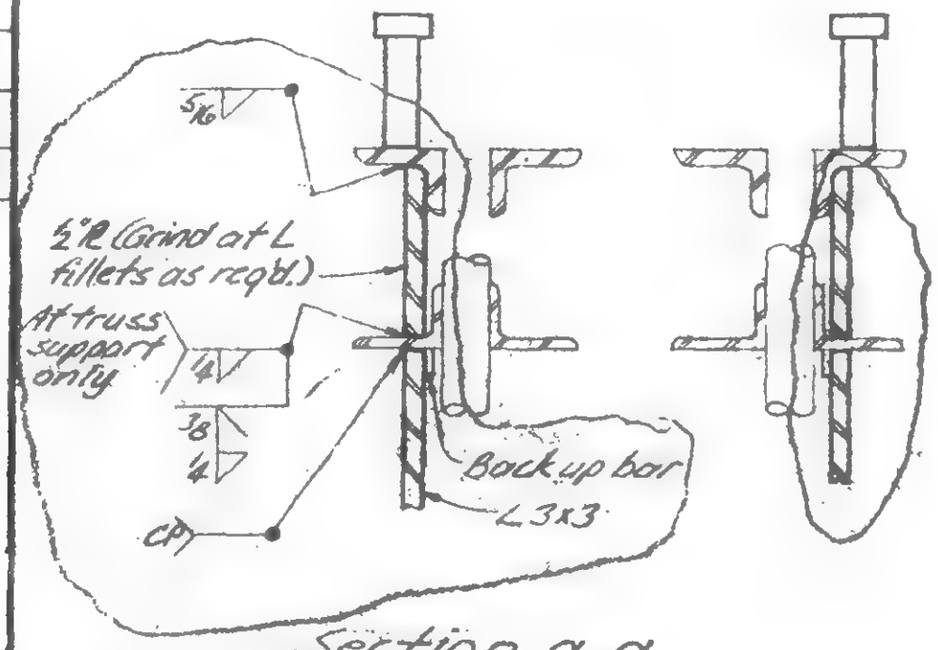

Section a-a

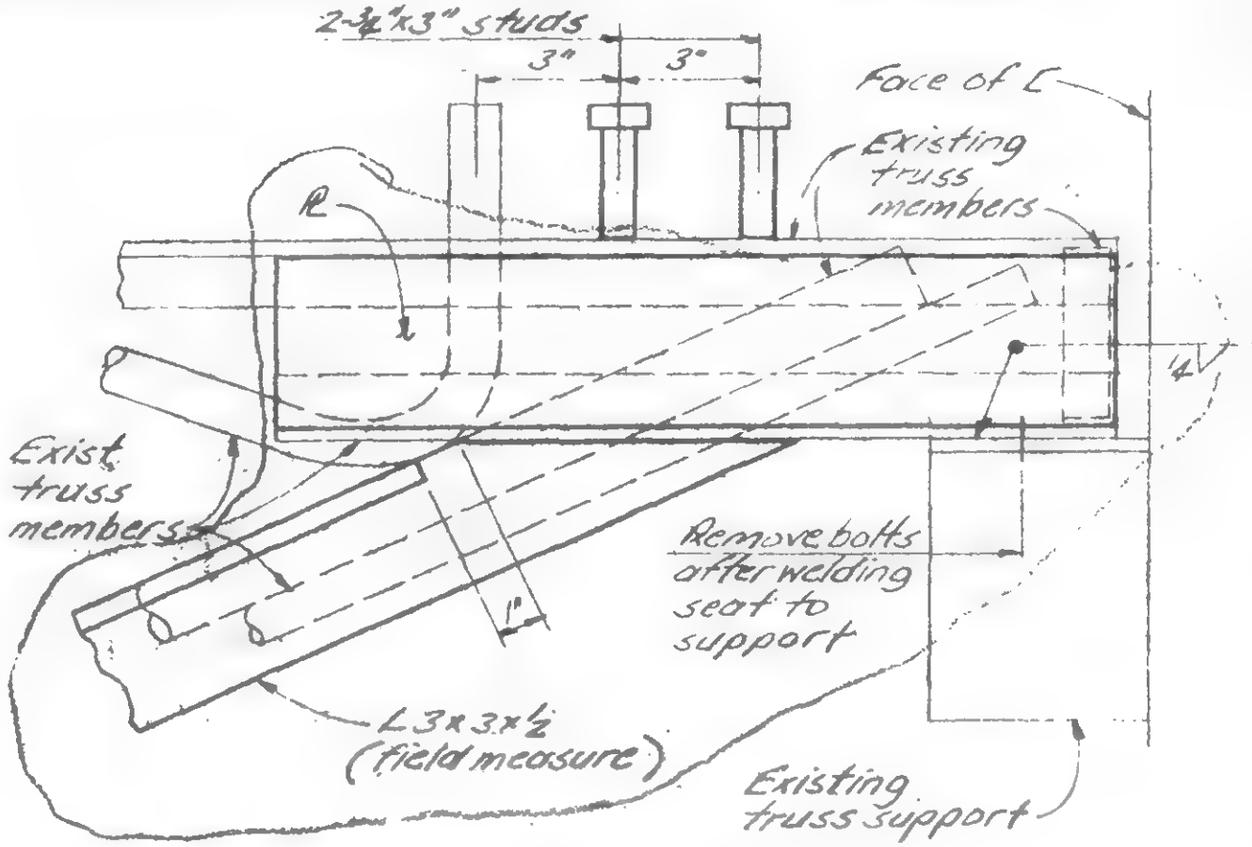

Detail 985G

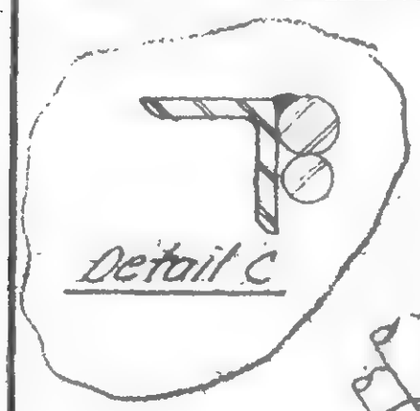

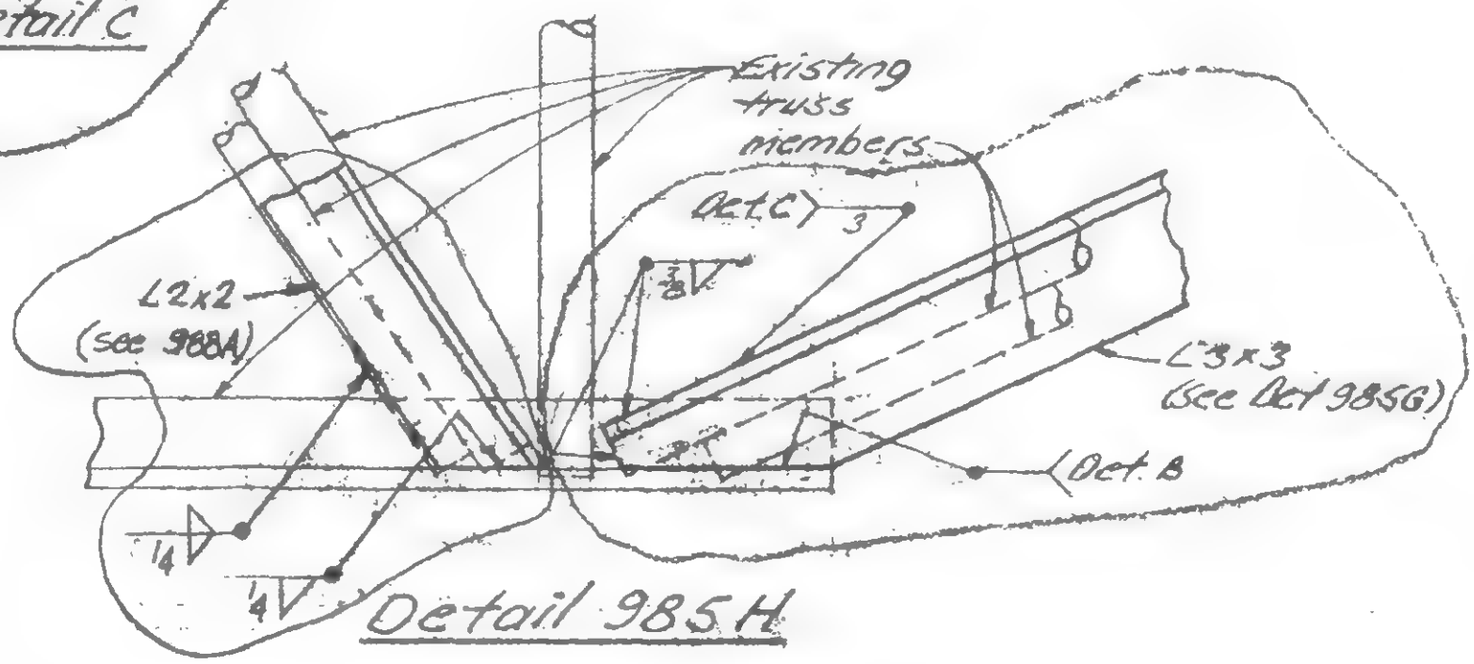

Detail 985H

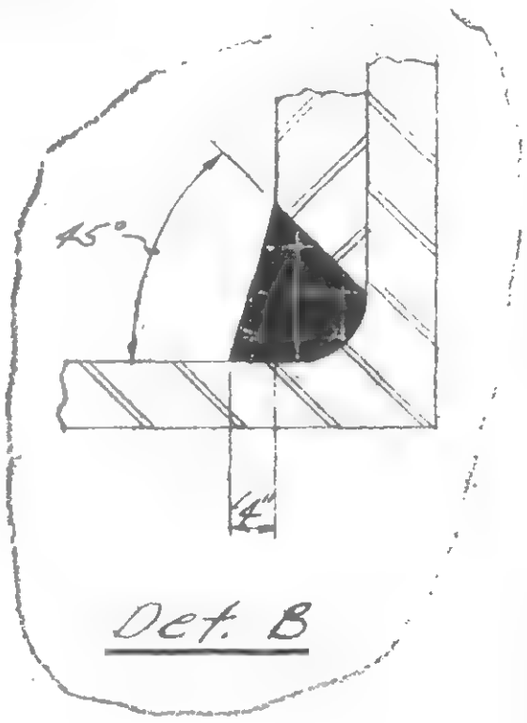

Det. B

LESLIE E. ROBERTSON — LICENSED PROFESSIONAL ENGINEER — No. 34360 — THE STATE OF NEW YORK

DESIGNED

DRAWN

CHECKED

19-A-985.4

SEELYE, HELLE CHRISTIANSEN, ROBERTSON — Structural & Civil Engineers

PROJECT: THE WORLD TRADE CENTER | TITLE: TRUSS DETAILS - FL. 106 | DATE: 5-9-79

DIVISIONS

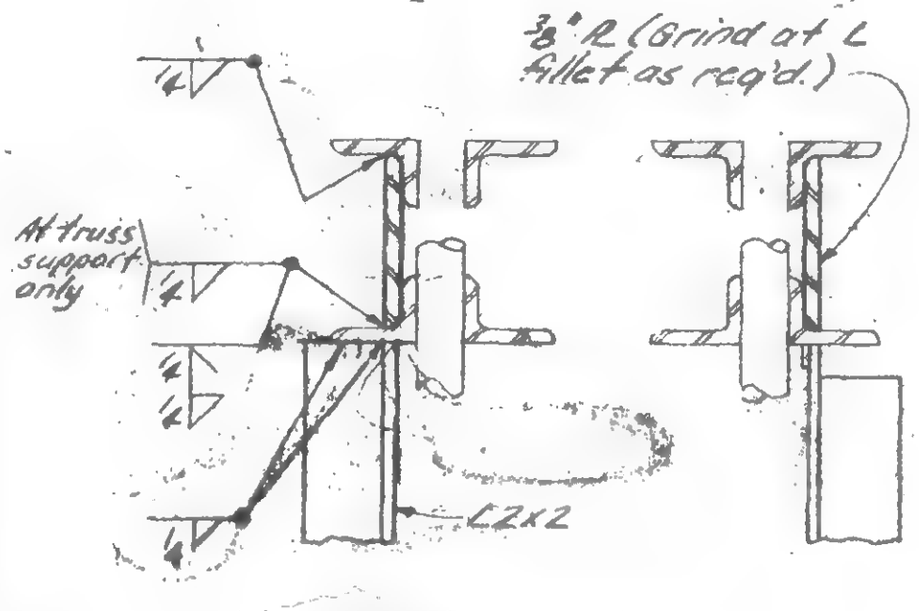

Section a-a

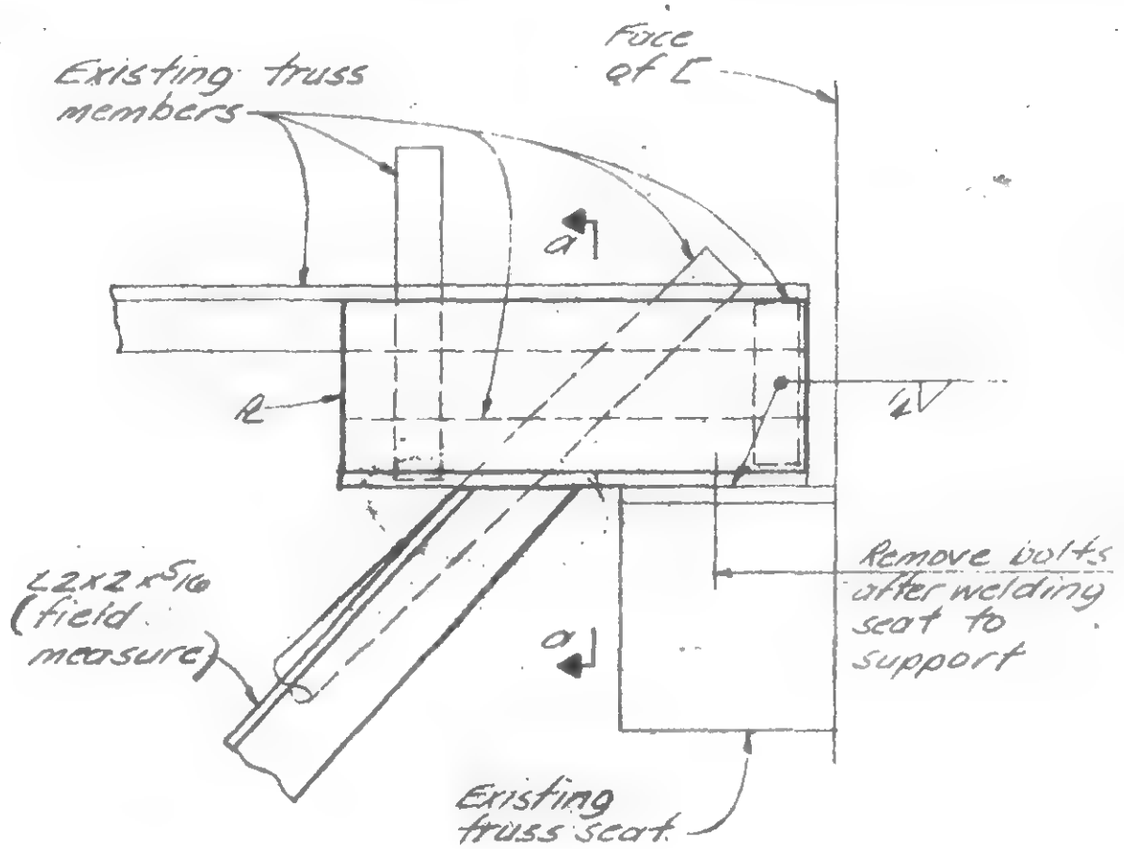

Detail 985J

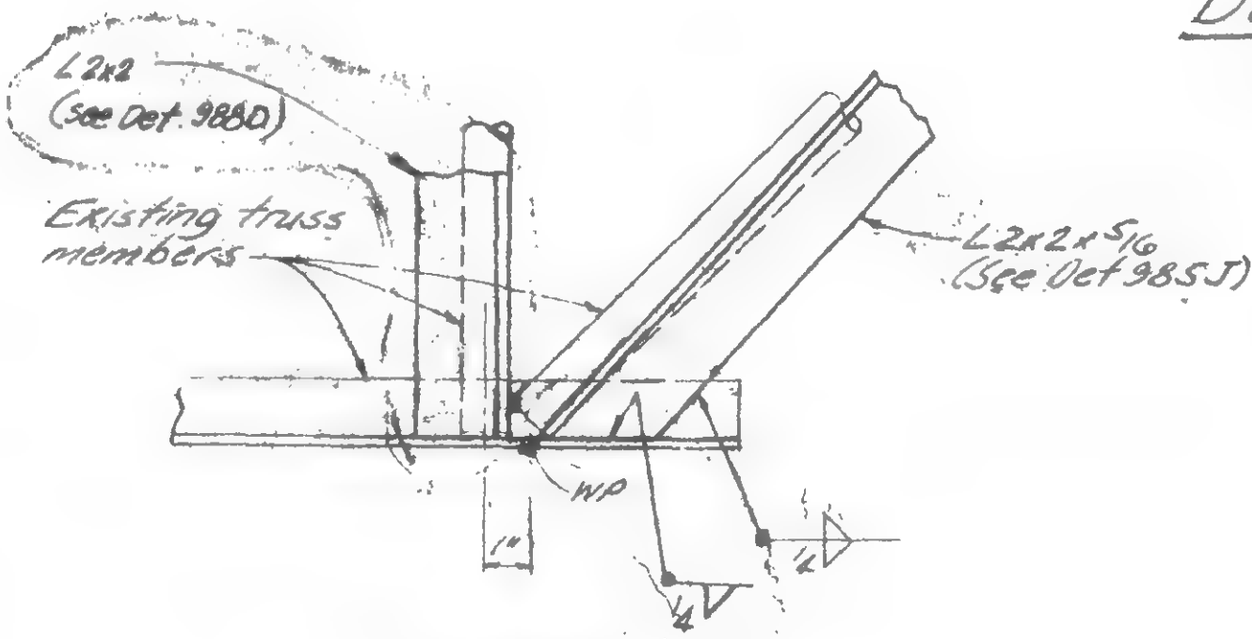

Detail 985K

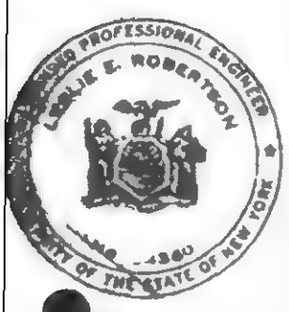

REVISIONS

DRAWN: A. Adams

APPROVED: WAB

19-A-985.5

SKILLING, HELLE, CHRISTIANSEN, ROBERTSON — Structural & Civil Engineers

PROJECT: THE WORLD TRADE CENTER | TITLE: TRUSS DETAILS - FL 106 | DATE: 1-7-71

REVISIONS
1/21/71
7/30/71
10/6/71
5/9/79

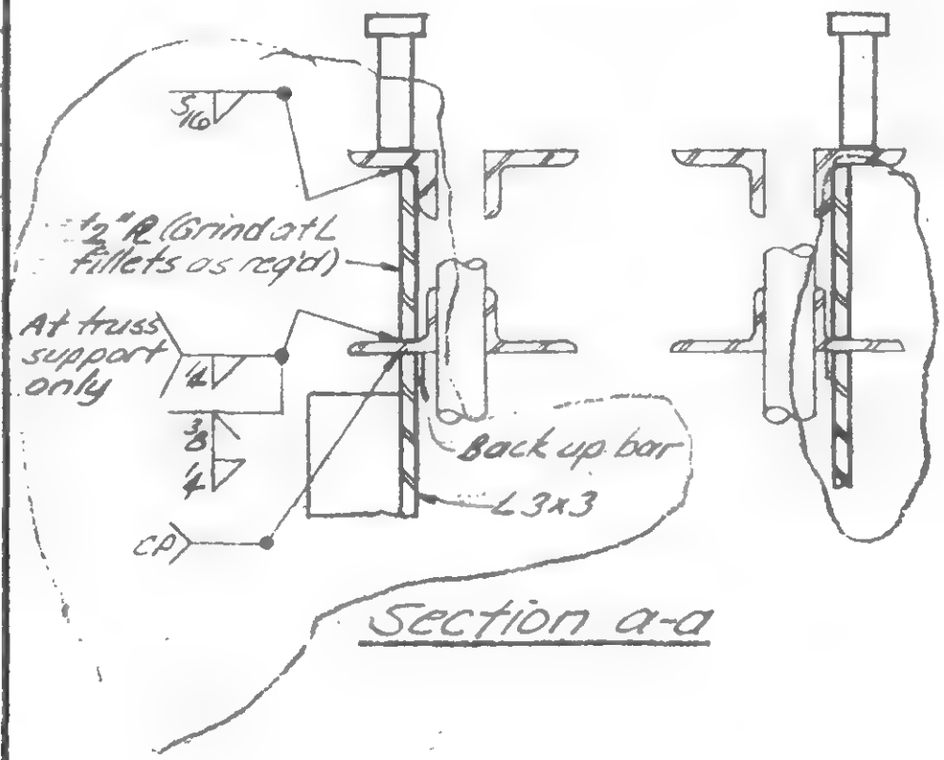

Section a-a

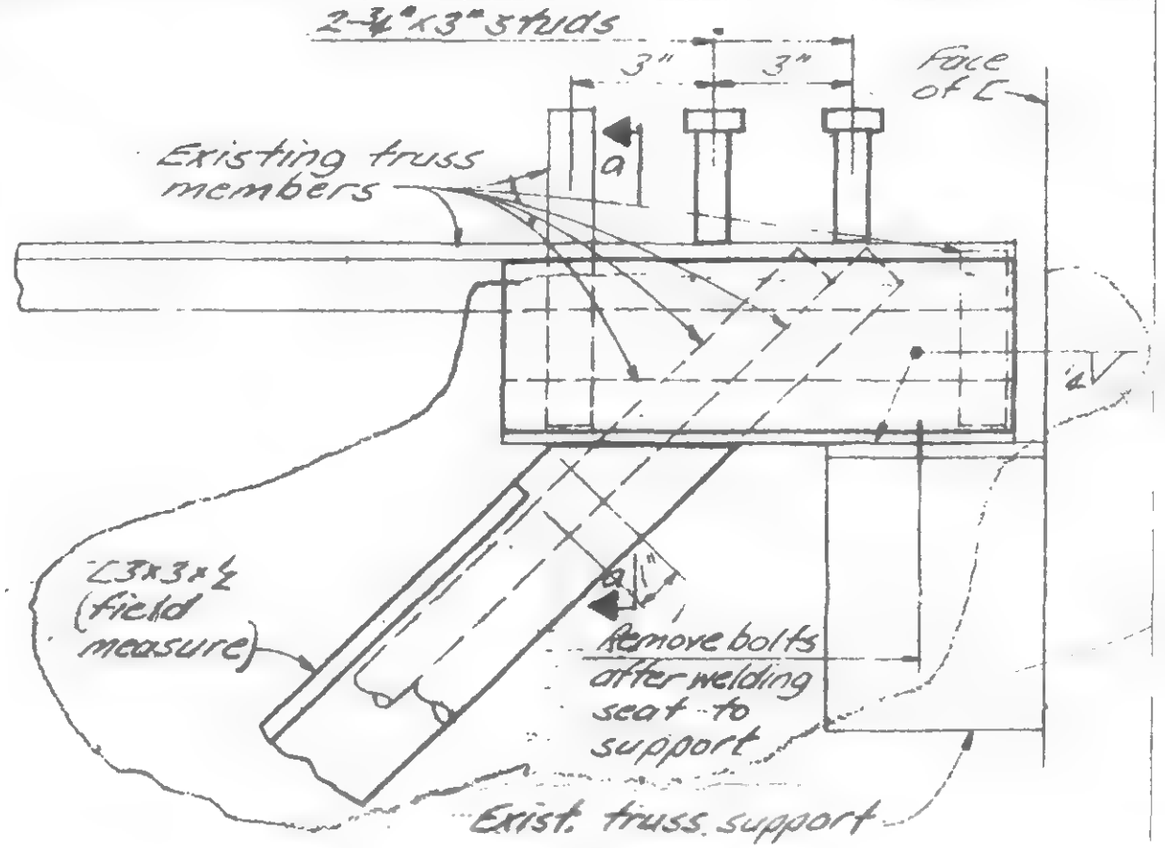

Detail 985L

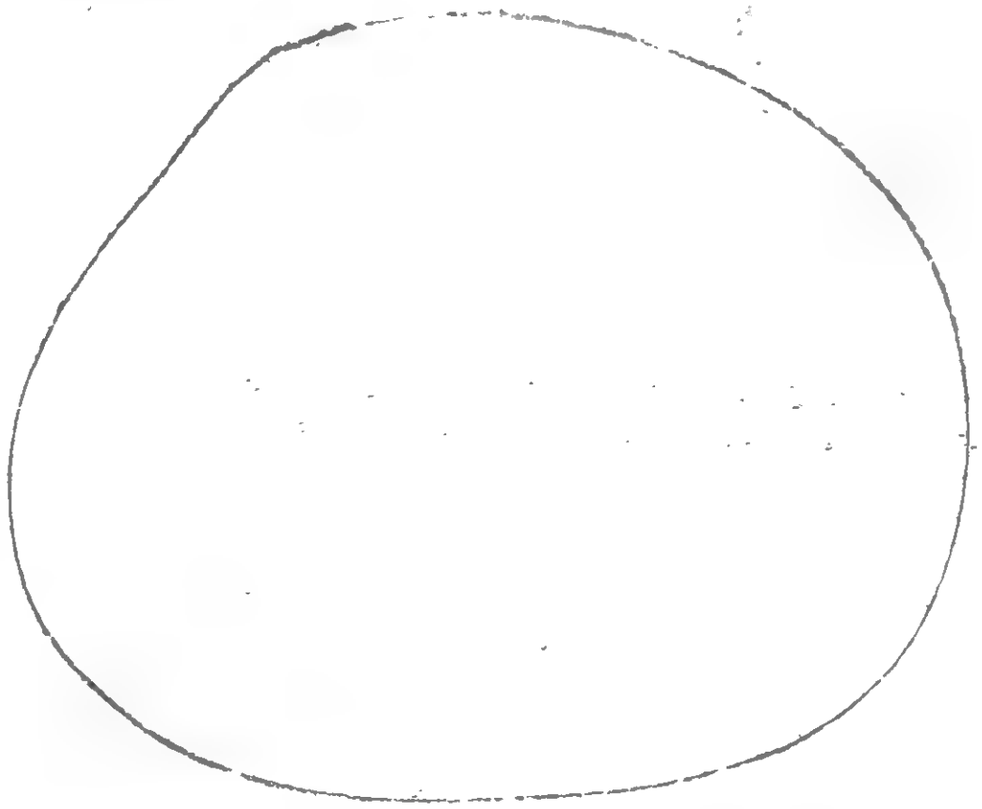

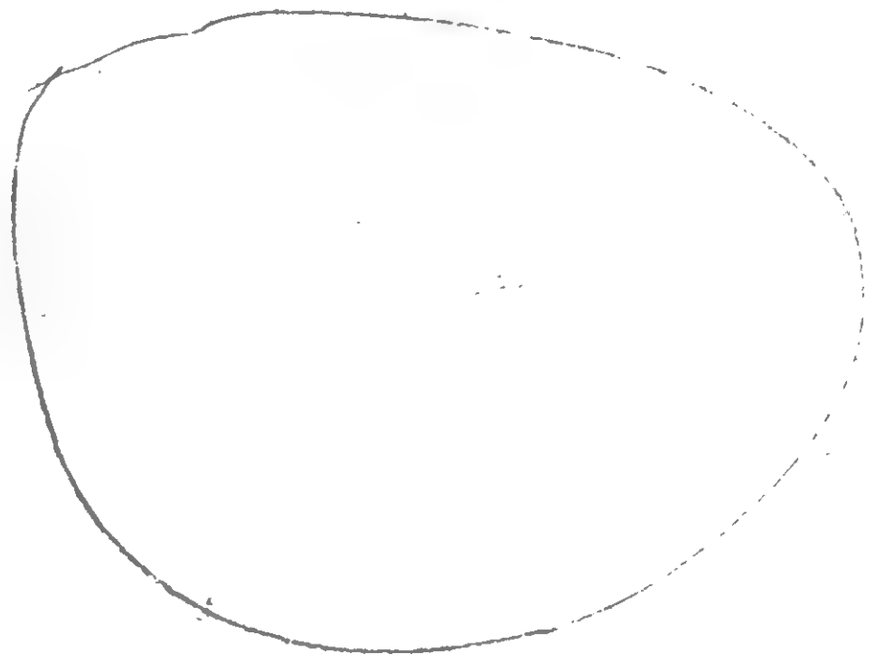

LICENSED PROFESSIONAL ENGINEER — LESLIE E. ROBERTSON — NO 34360 — UNIVERSITY OF THE STATE OF NEW YORK

DESIGNED

DRAWN J. Adams

REVIEWED WAB

19-A-3856

SKILLING, HELLE, CHRISTIANSEN, ROBERTSON — Structural & Civil Engineers

PROJECT: THE WORLD TRADE CENTER | TITLE: TRUSS DETAILS - FL 106 | DATE: 5-9-79

REVISIONS

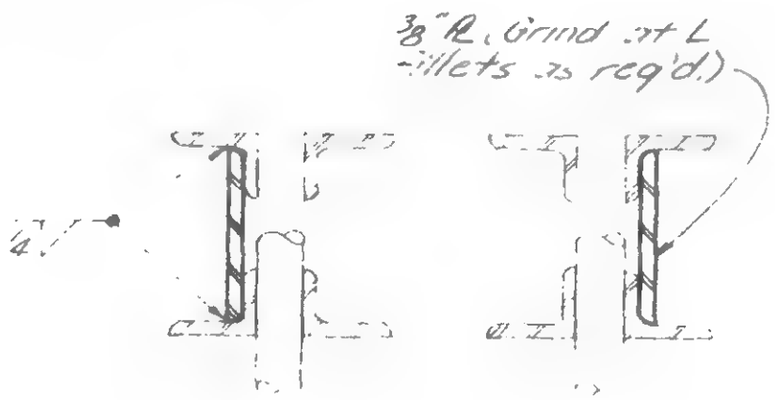

Section a-a

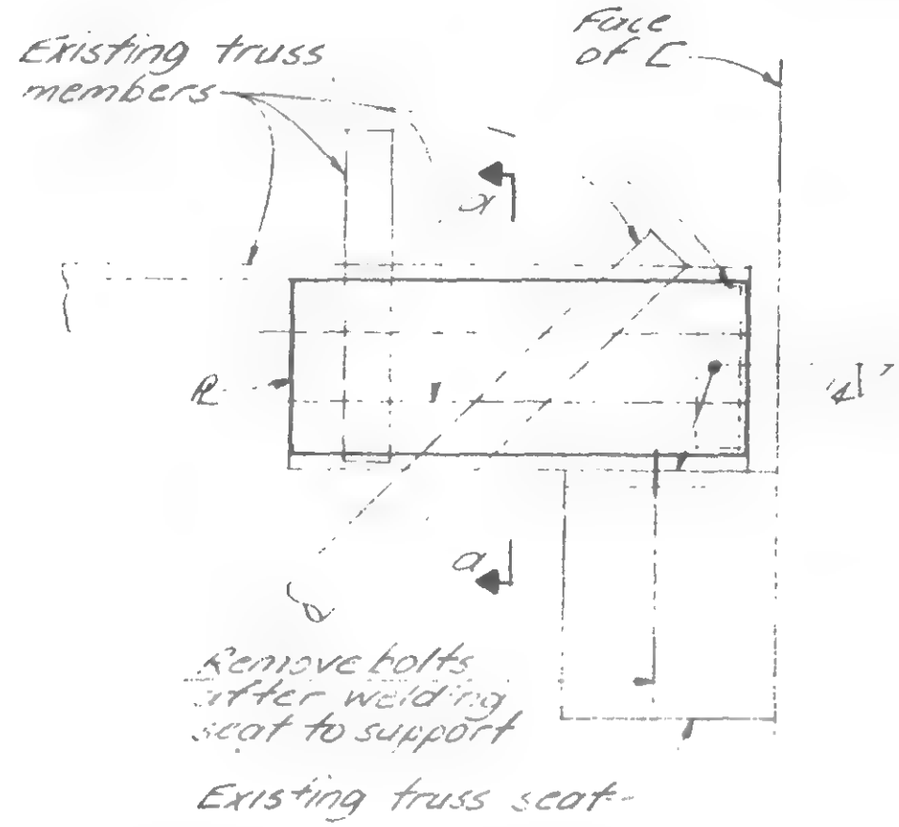

Detail 985N

19-A-985.7

SKILLING, HELLE, CHRISTIANSEN, ROBERTSON — Structural & Civil Engineers

PROJECT THE WORLD TRADE CENTER | TITLE TRUSS DETAILS - FL.106 | DATE 5/9/79

REVISIONS

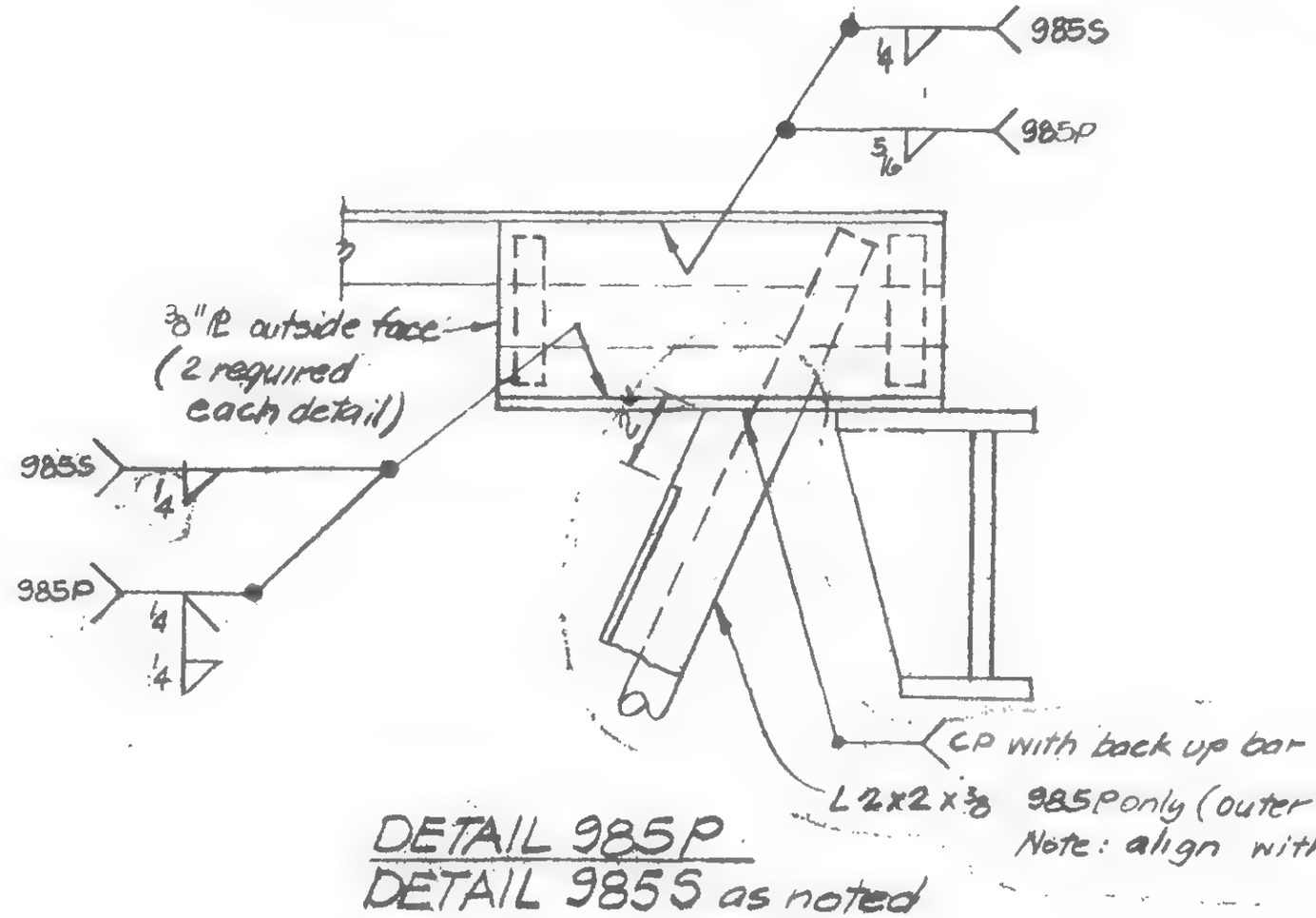

DETAIL 985P
DETAIL 985S as noted

DESIGNED

DRAWN P. Ocelu

REVIEWED

19-A-985.8

PROJECT THE WORLD TRADE CENTER | TITLE TRUSS DETAILS - FL. 106 | DATE 5/9/79

REVISIONS

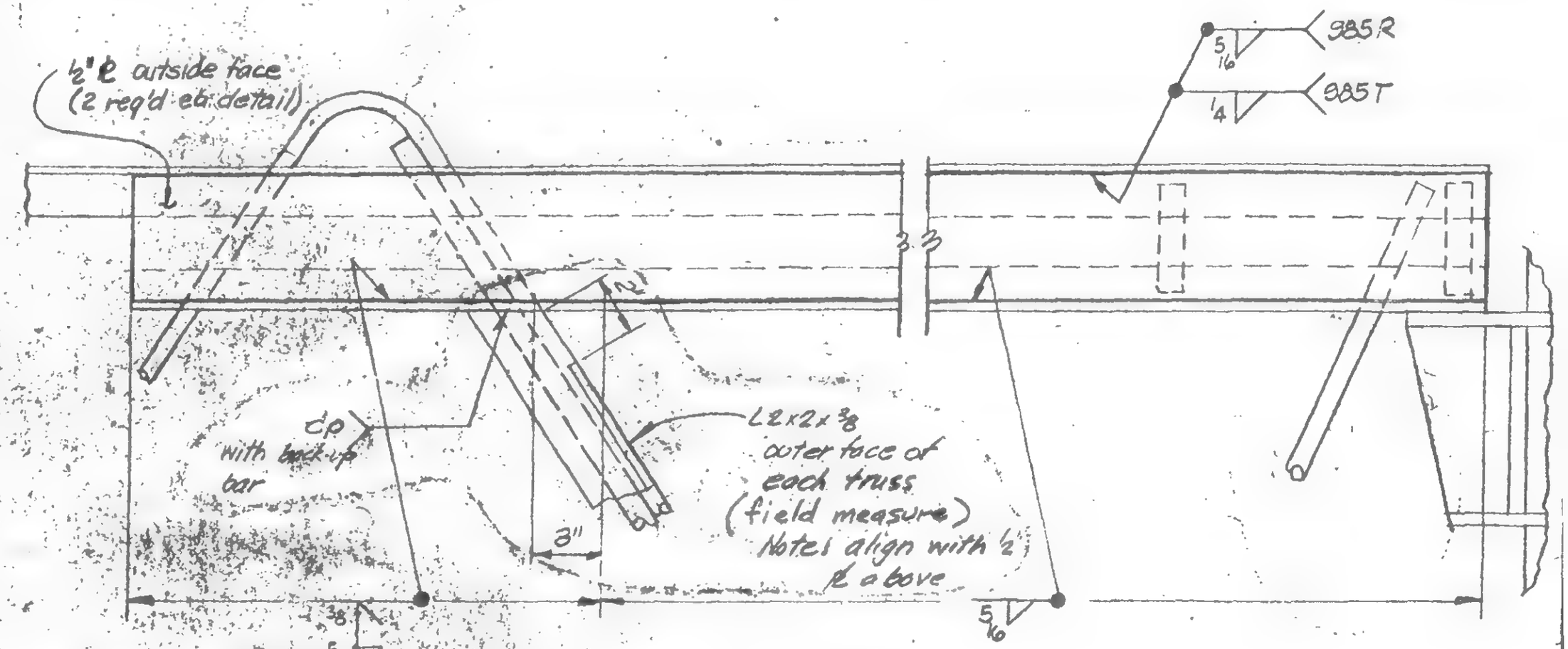

DETAIL 985 R & T

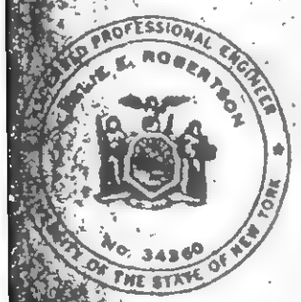

SIGNED

DRAWN P. Ocker

REVIEWED WEB

19-A-985.9

SKILLING, HELLE, CHRISTIANSEN, ROBERTSON — Structural & Civil Engineers

WTC 744.00

PROJECT THE WORLD TRADE CENTER | TITLE TRUSS DETAILS - FL 106 | DATE 5/9/79

VISIONS

11.30.79

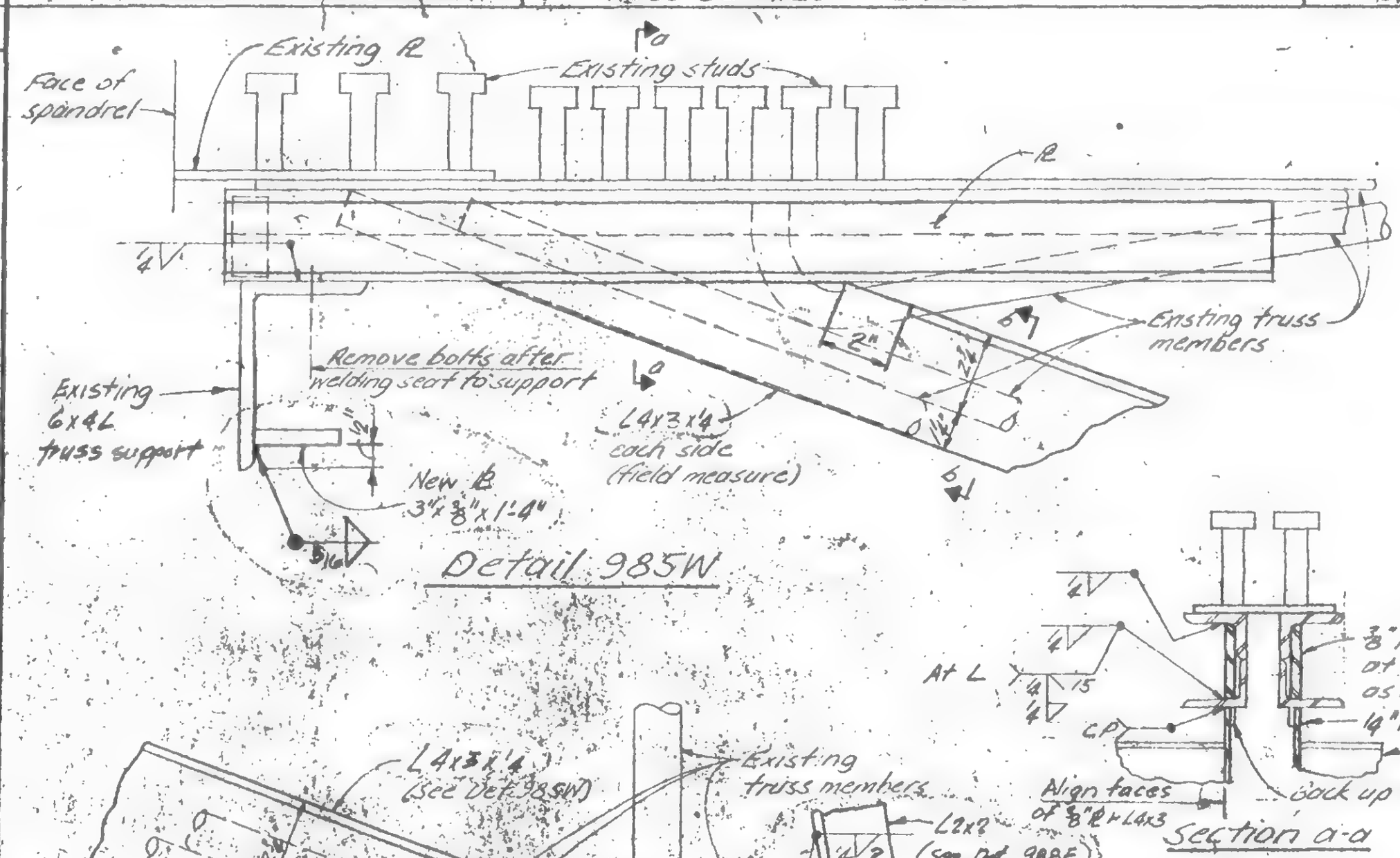

LICENSED PROFESSIONAL ENGINEER — LESLIE E. ROBERTSON — NO. 34360 — UNIVERSITY OF THE STATE OF NEW YORK

DESIGNED

DRAWN

REVIEWED

19-A-985.10

SKILLING, HELLE, CHRISTIANSEN, ROBERTSON — Structural & Civil Engineers

WTC 444.0

PROJECT THE WORLD TRADE CENTER | TITLE TRUSS DETAILS - FL 106 | DATE 5/9/79

REVISIONS

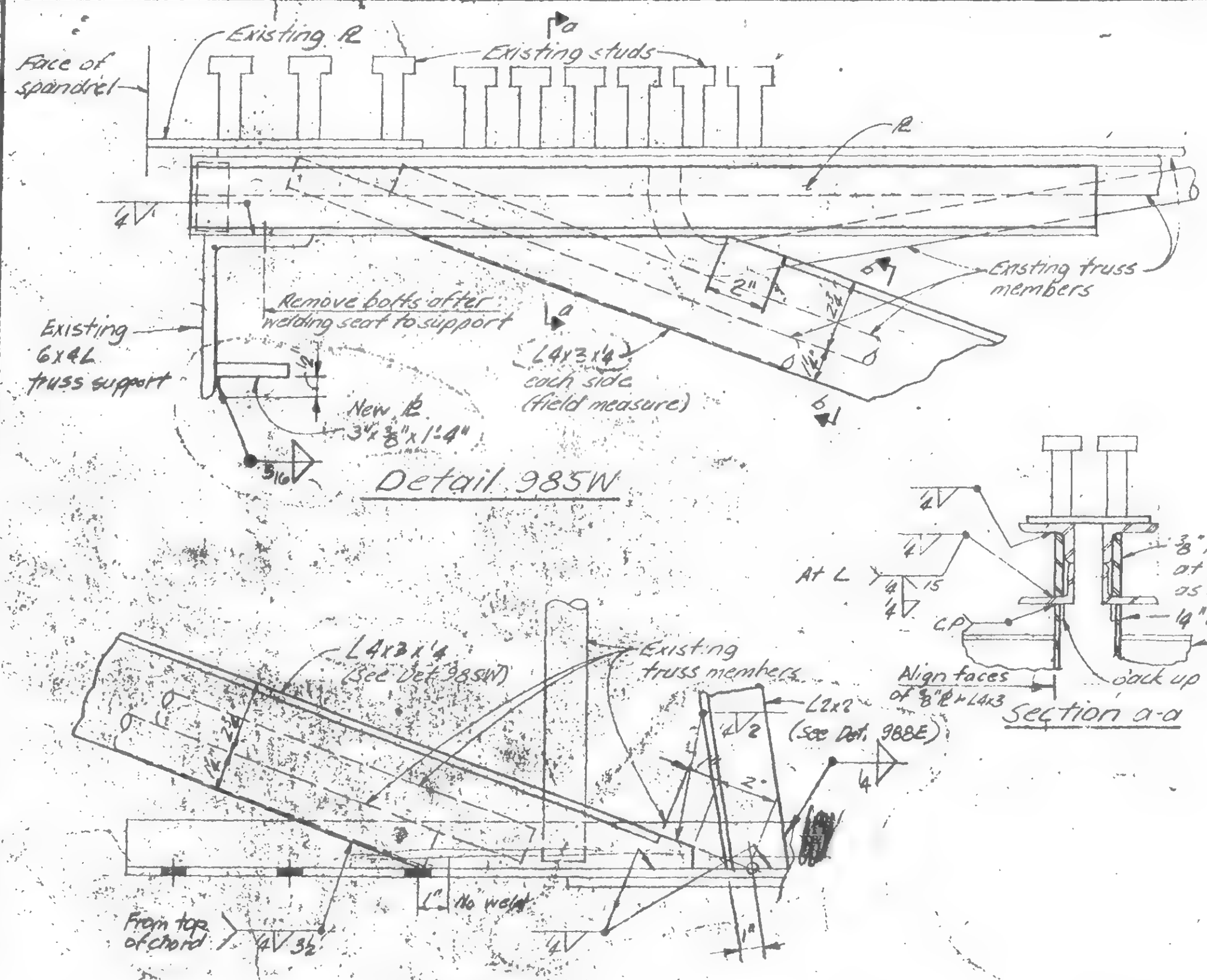

REGISTERED PROFESSIONAL ENGINEER — WILLIAM E. ROBERTSON — No. 54360 — STATE OF NEW YORK

REGISTERED

DRAWN

REVIEWED

1

19-A-985.10

SKILLING, HELLE, CHRISTIANSEN, ROBERTSON — Structural & Civil Engineers

WTC 444.00

PROJECT THE WORLD TRADE CENTER | TITLE FL. 106 - Stud Details | DATE 1-7-71

REVISIONS

5/9/79

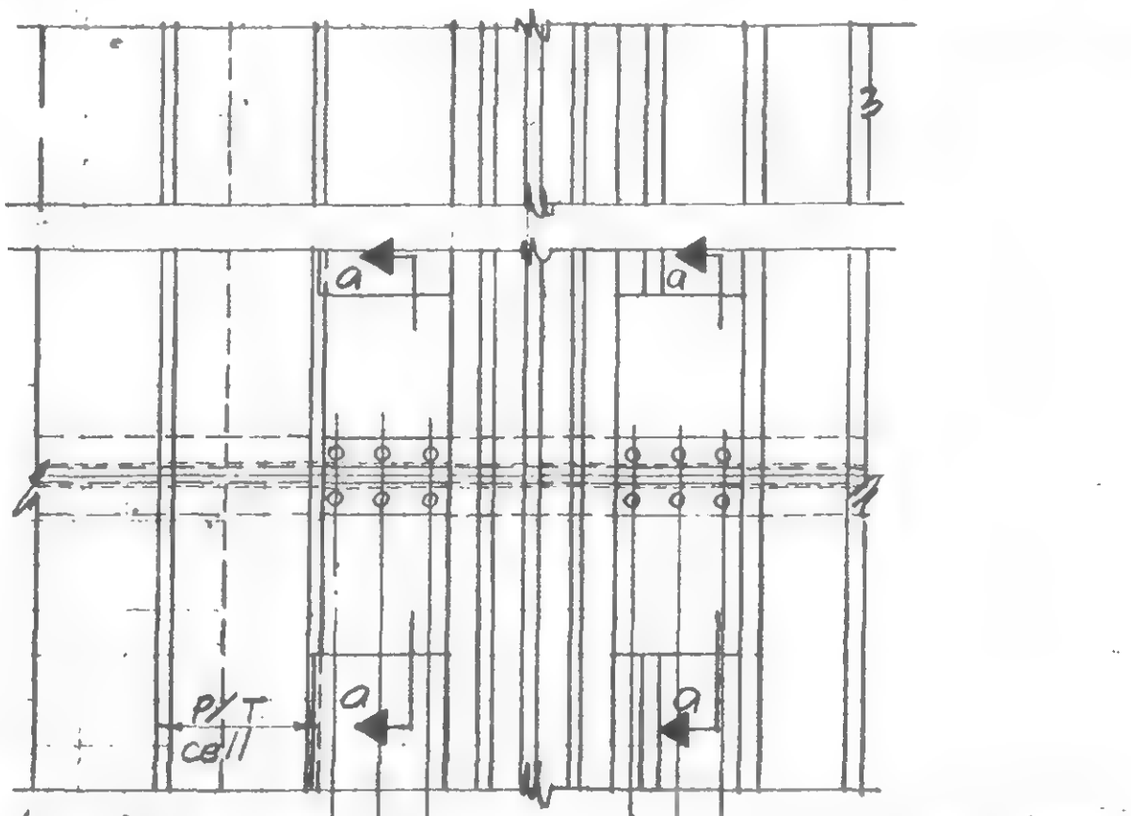

(986A) 6-¾"ϕ studs
(986B) 4-¾"ϕ studs

6-¾"ϕ studs (986A)
4-¾"ϕ studs (986B)

Existing Plan Detail 986A & B

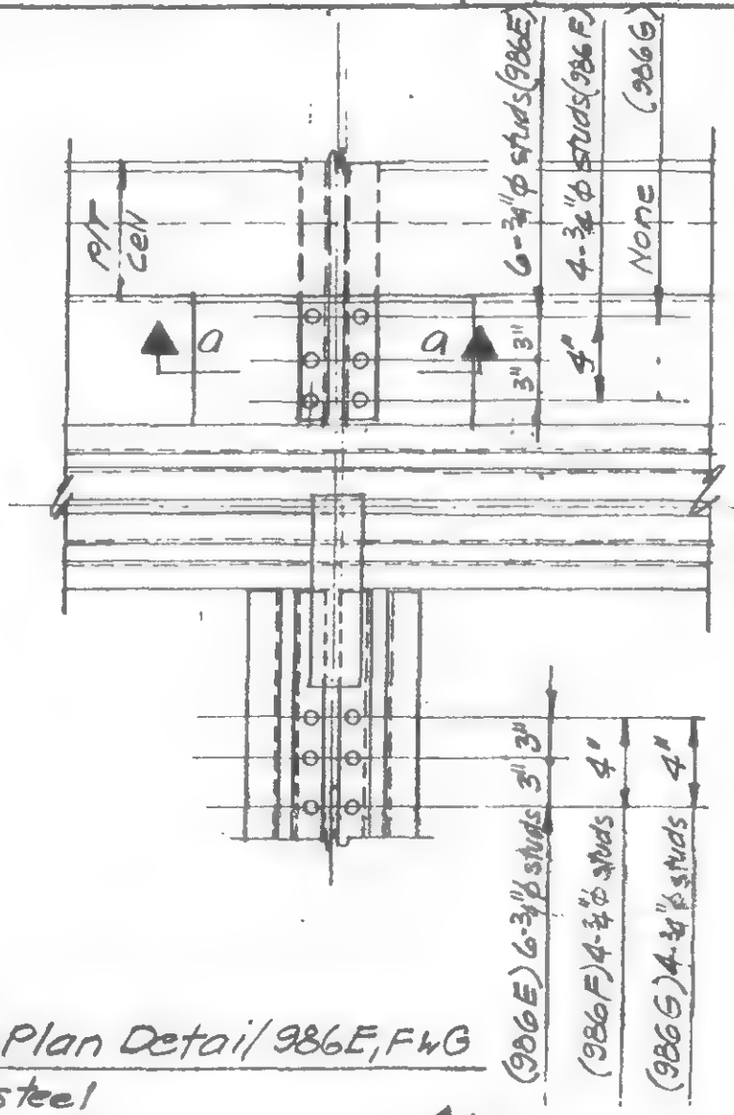

Existing Plan Detail 986E, F & G

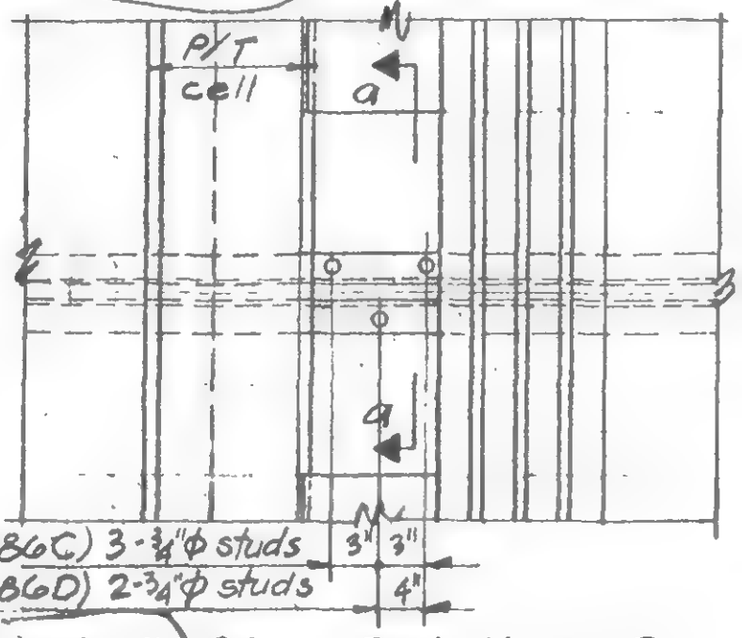

(986C) 3-¾"ϕ studs
(986D) 2-¾"ϕ studs

Existing Plan Detail C & D

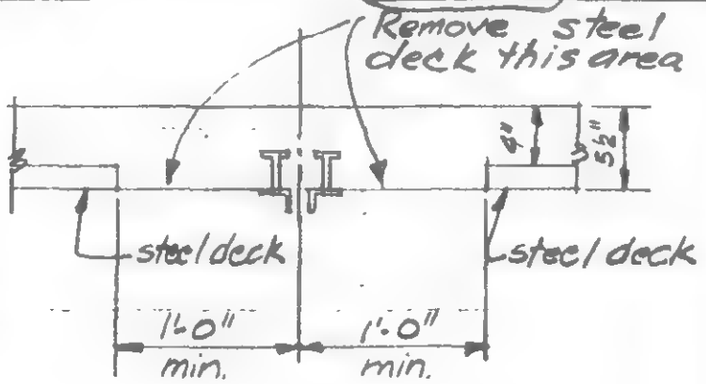

Section a-a

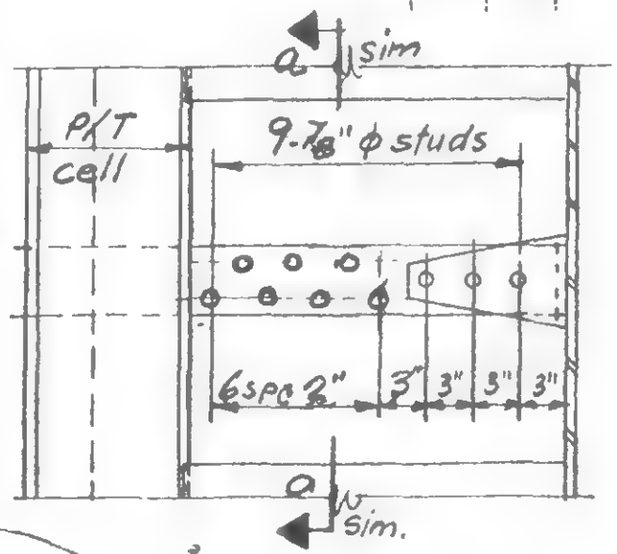

Existing Plan Detail 986H

LICENSED PROFESSIONAL ENGINEER — LESLIE E. ROBERTSON — No 34360 — UNIVERSITY OF THE STATE OF NEW YORK

DESIGNED WAB

DRAWN

REVIEWED WAB

19-A-986

SKILLING, HELLE, CHRISTIANSEN, ROBERTSON — Structural & Civil Engineers

WTC 444.00

PROJECT THE WORLD TRADE CENTER | TITLE FL. 106 CONNECTION DETAILS | DATE 1-7-71

REVISIONS

1/27/71
7/[illegible]/71
10/6/71
5/9/79
11/30/79 Δ

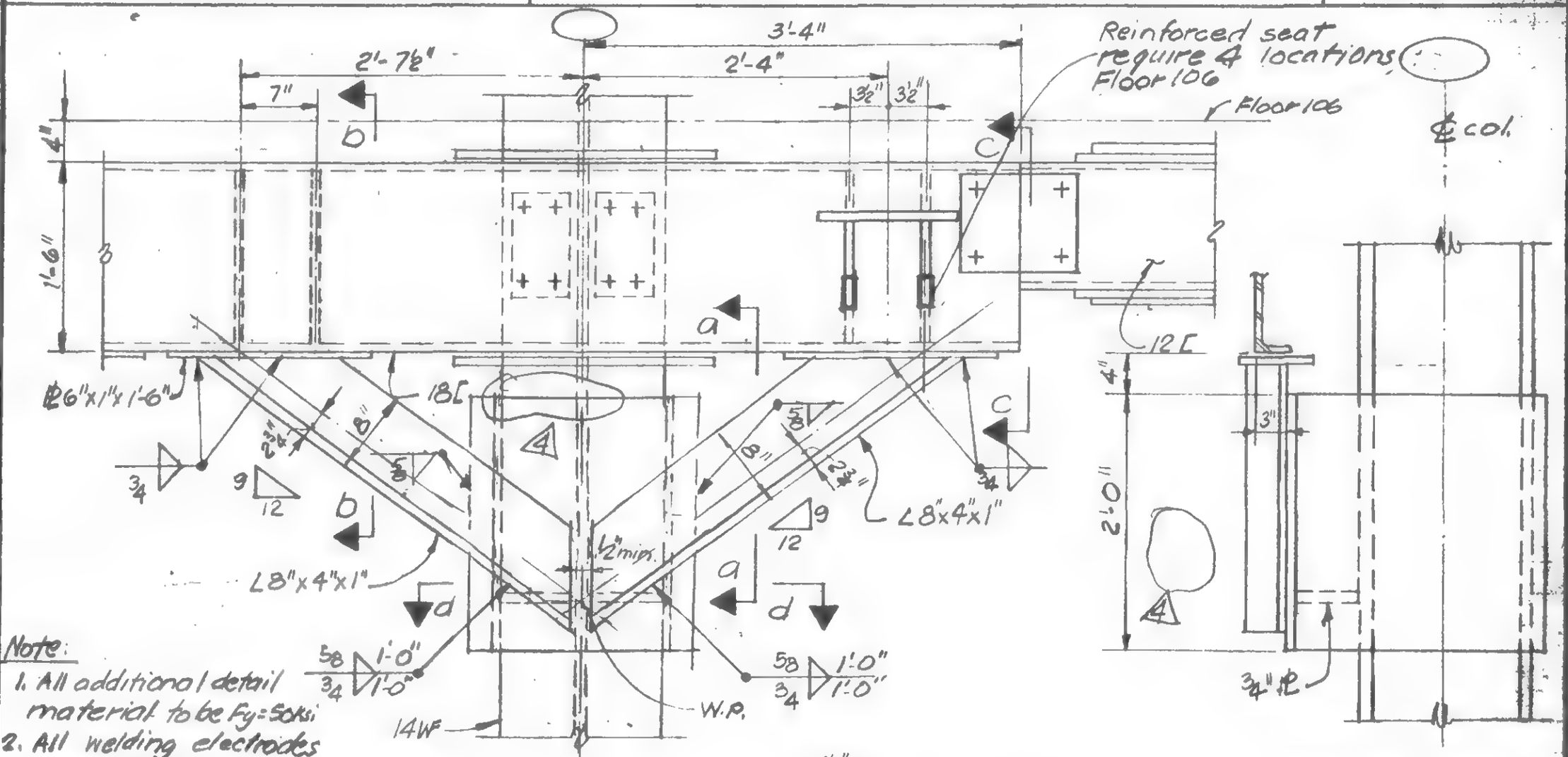

Note:
1. All additional detail material to be Fy=50ksi
2. All welding electrodes to be E70xx.

Section a-a

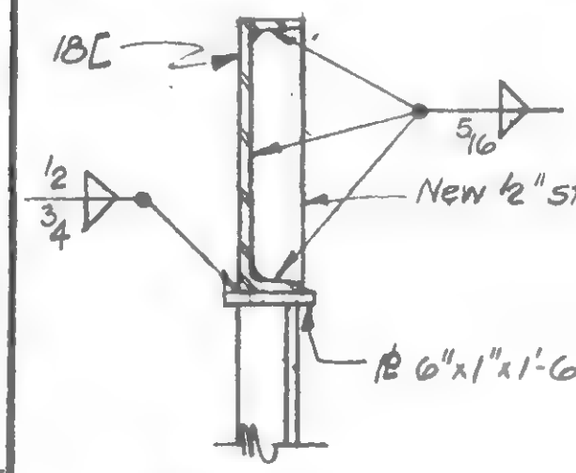

Section b-b

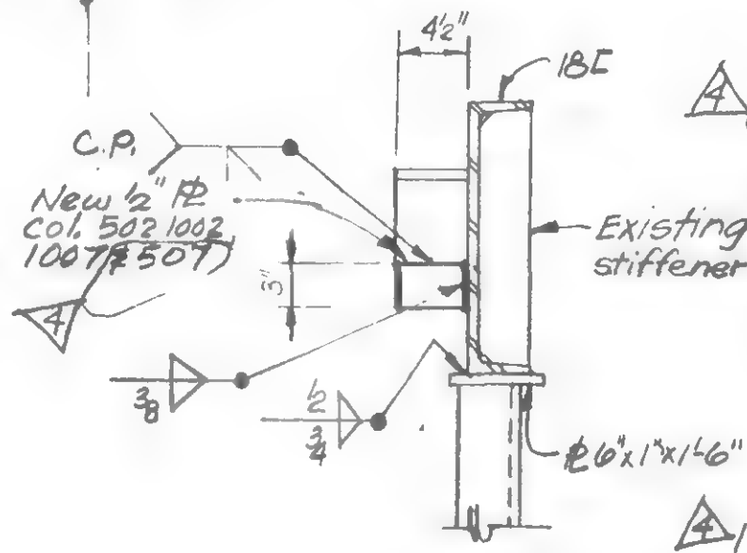

Section c-c

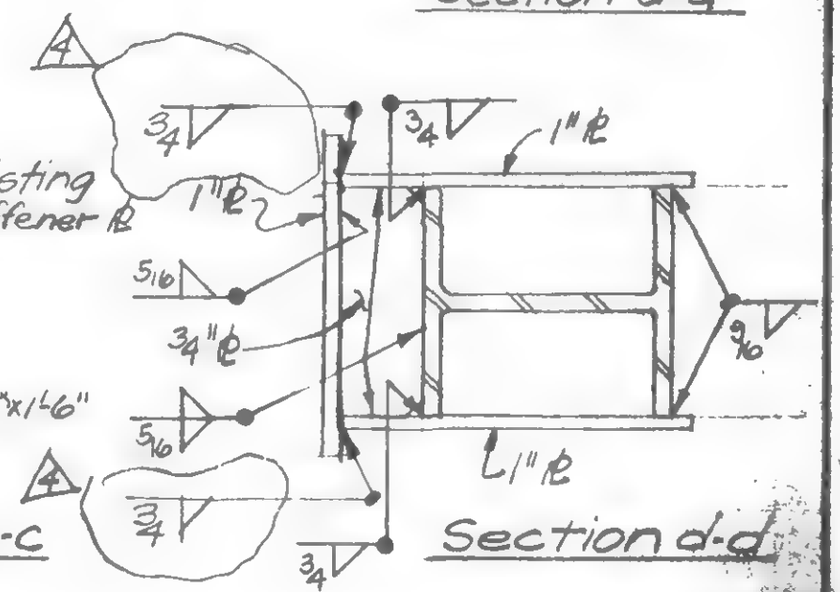

Section d-d

DETAIL 987A

@ col. 1002, as shown existing
@ col. 502 & 1007 similar existing @ Col. 507 sim. new

19-A-987.1

LICENSED PROFESSIONAL ENGINEER — LESLIE E. ROBERTSON — No 34360 — UNIVERSITY OF THE STATE OF NEW YORK

SIGNED

DRAWN S.C.

REVIEWED W.D. Brewer

SKILLING, HELLE, CHRISTIANSEN, ROBERTSON — Structural & Civil Engineers

WTC 444.00

PROJECT THE WORLD TRADE CENTER | TITLE FL. 106 CONNECTION DETAILS | DATE 1-7-71

REVISIONS

Printed 7/30/71

10/6/71

5/9/79

11-30-79 4

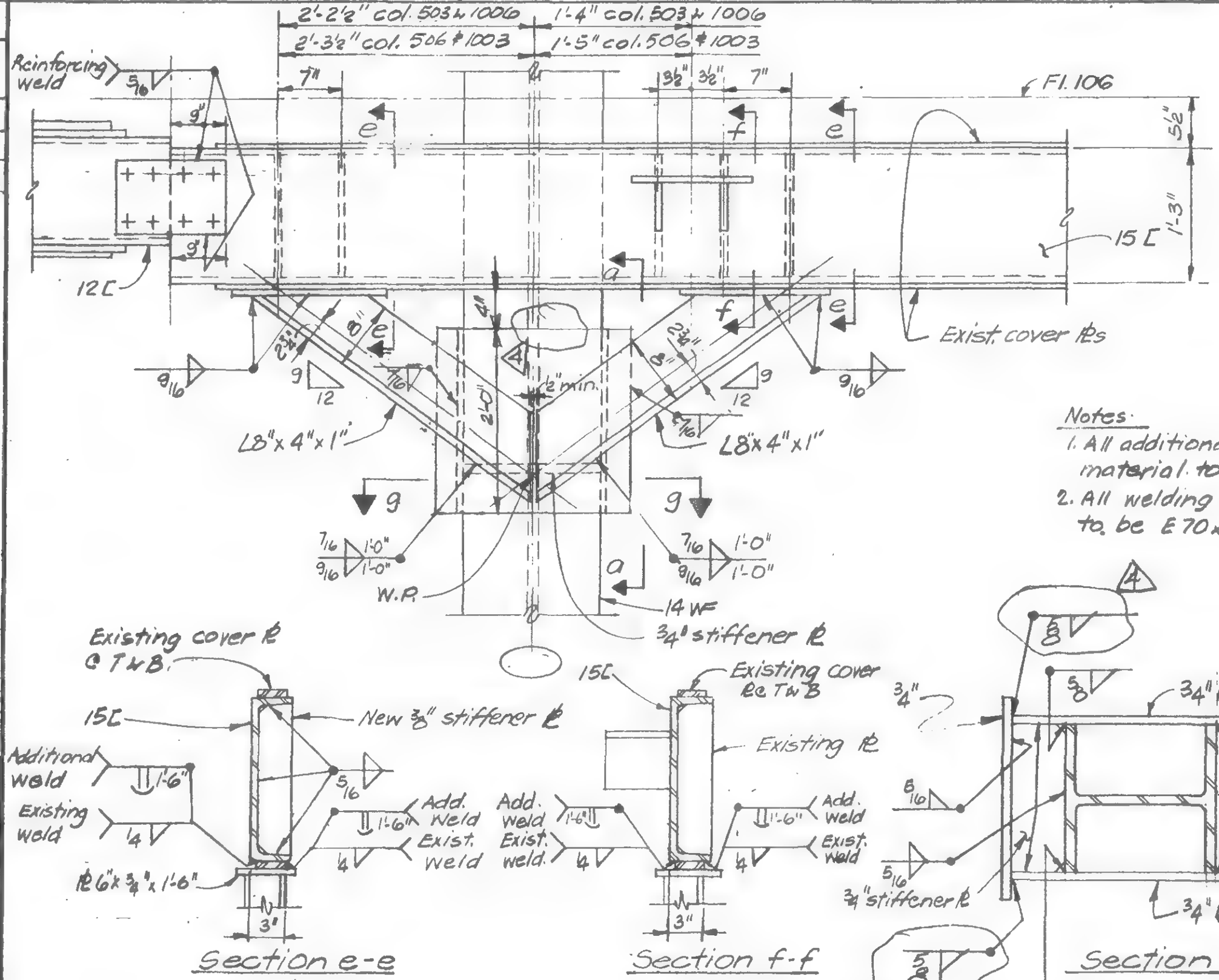

Notes:

1. All additional detail material to be Fy=50ksi
2. All welding electrodes to be E70xx.

DETAIL 987B

c col. 1003, as shown existing

LICENSED PROFESSIONAL ENGINEER — LESLIE E. ROBERTSON — No. 34360 — THE STATE OF NEW YORK

DESIGNED

DRAWN S.C.

CHECKED

SKILLING, HELLE, CHRISTIANSEN, ROBERTSON — Structural & Civil Engineers

PROJECT THE WORLD TRADE CENTER | TITLE FL. 106 CONNECTION DETAILS | DATE 1-7-71

REVISIONS
7/30/71
10/6/71
5/9/79

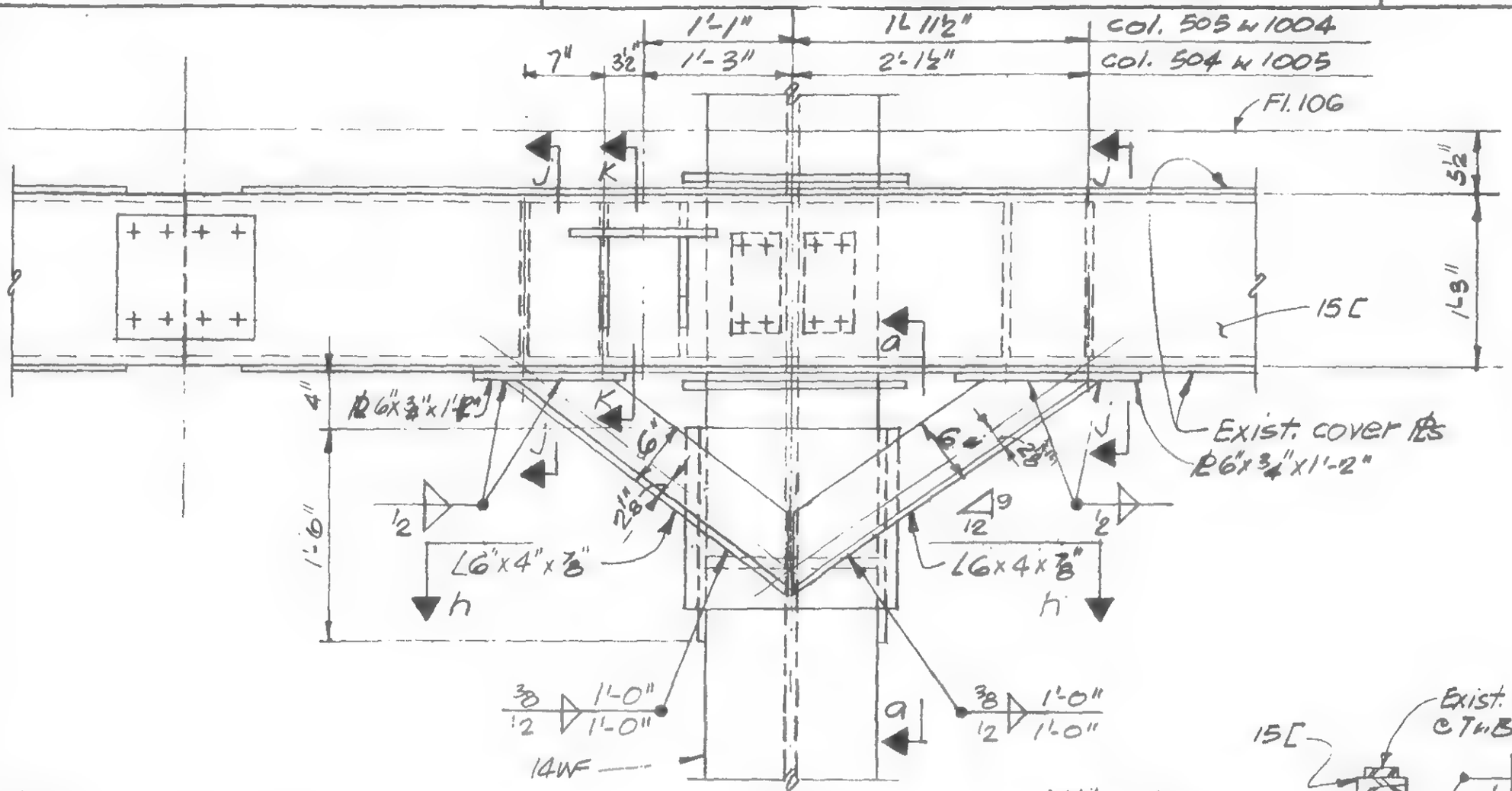

Notes:
1. All additional detail material to be F_y=50ksi.
2. All welding electrodes to be E70xx

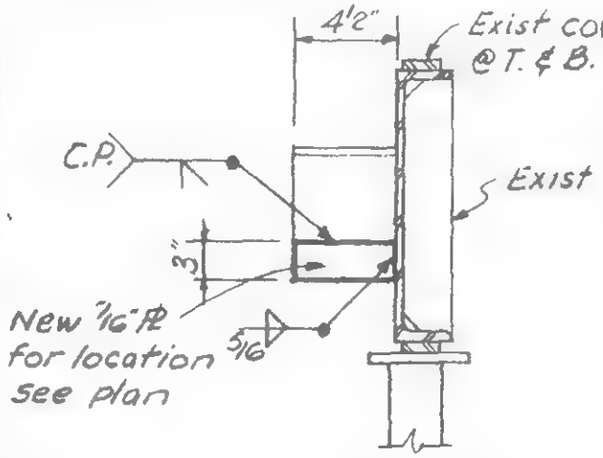

Section K-K

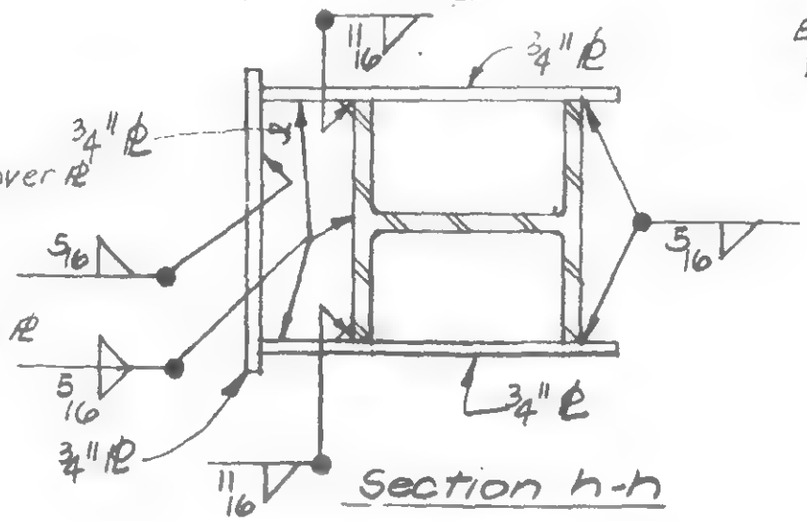

Section h-h

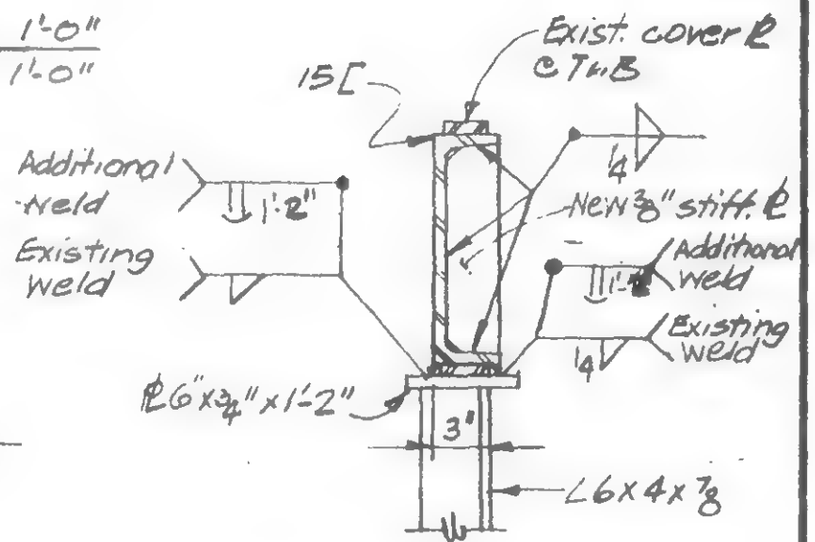

Section j-j

DETAIL 987 C
@ col. 1005, as shown
@ col. 504, 505 & 1004, similar

existing
existing

19-A-987.3

LICENSED PROFESSIONAL ENGINEER — LESLIE E. ROBERTSON — NO 34380 — UNIVERSITY OF THE STATE OF NEW YORK

DESIGNED

DRAWN S.C.

REVIEWED

SKILLING, HELLE CHRISTIANSEN, ROBERTSON — Structural & Civil Engineers

PROJECT: THE WORLD TRADE CENTER | TITLE: FL. 106 CONNECTION DETAILS | DATE: 5/9/79 R

REVISIONS

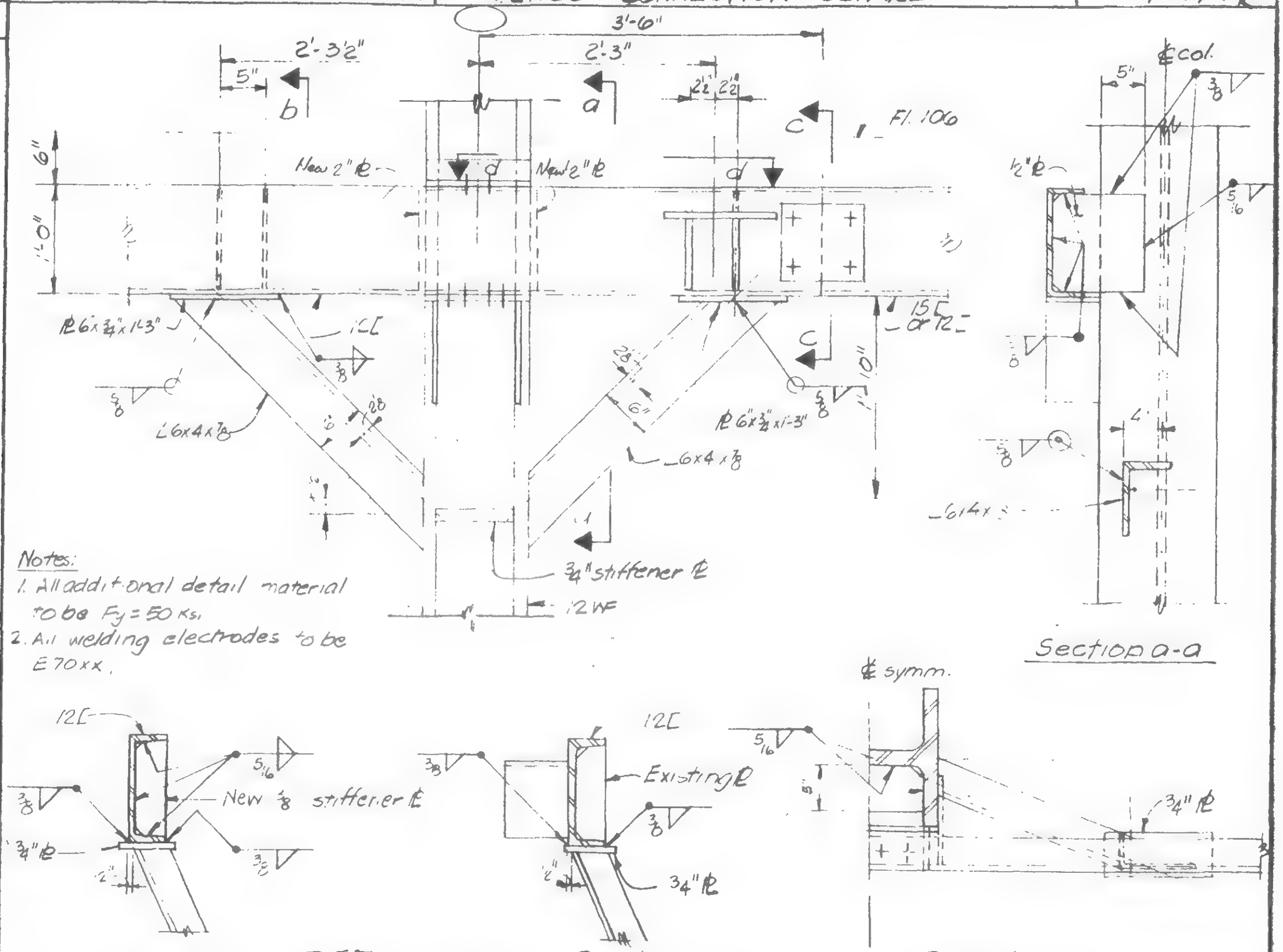

Notes:
1. All additional detail material to be $F_y = 50$ ksi
2. All welding electrodes to be E70xx.

@ col 601, as shown Reinf. not required
@ col 608, 901 & 908, similar New

LICENSED PROFESSIONAL ENGINEER — LESLIE E. ROBERTSON — No 34360 — UNIVERSITY OF THE STATE OF NEW YORK

SIGNED

DRAWN: P. Orch

REVIEWED: D.A.B.

19-A-987.4

SKILLING, HELLE, CHRISTIANSEN, ROBERTSON — Structural & Civil Engineers

WTC 444.00

PROJECT THE NORLD TRADE CENTER | TITLE FL. 106 CONNECTION DETAILS | DATE 5,'9,'79R

11-30-79 4

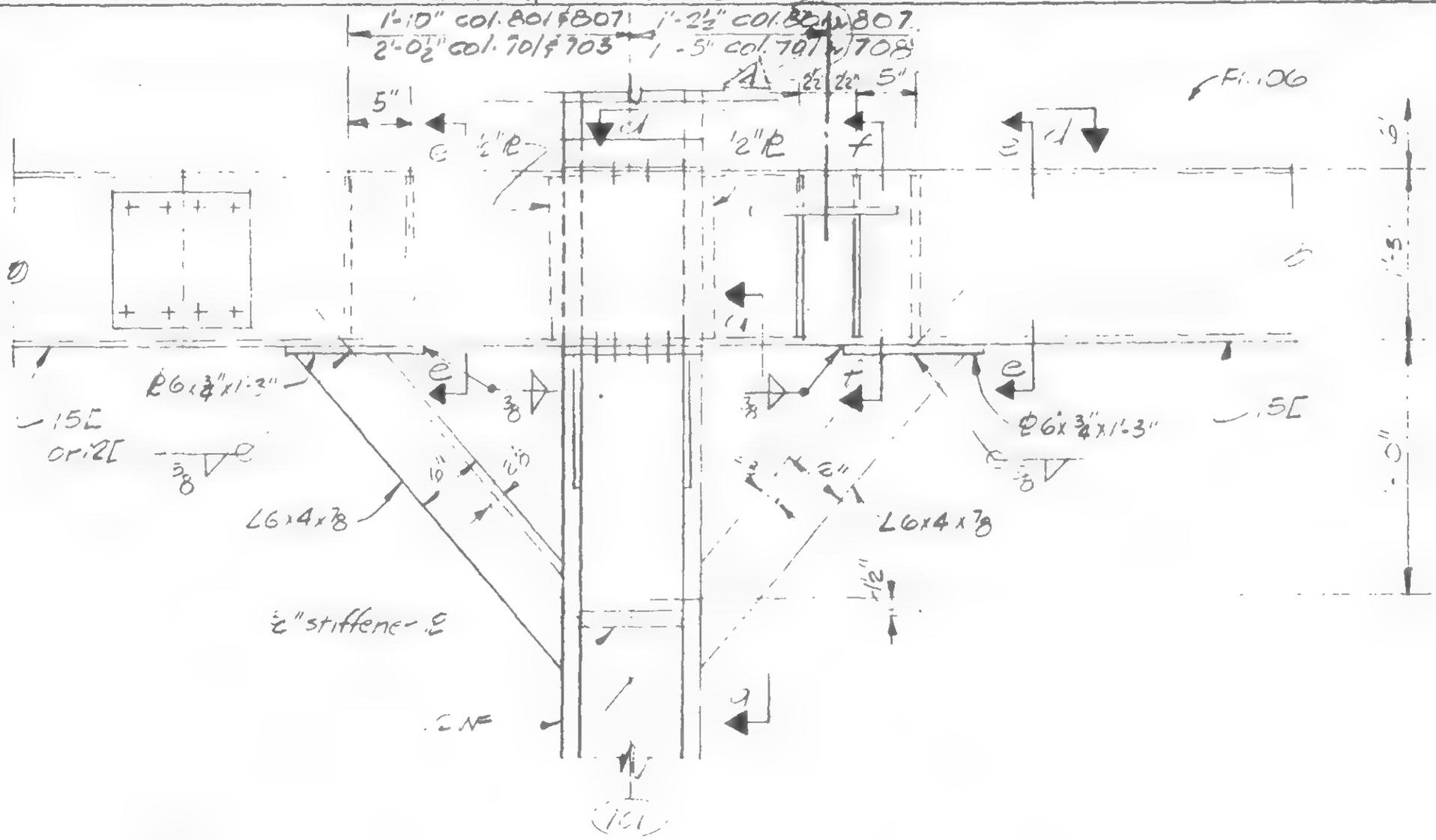

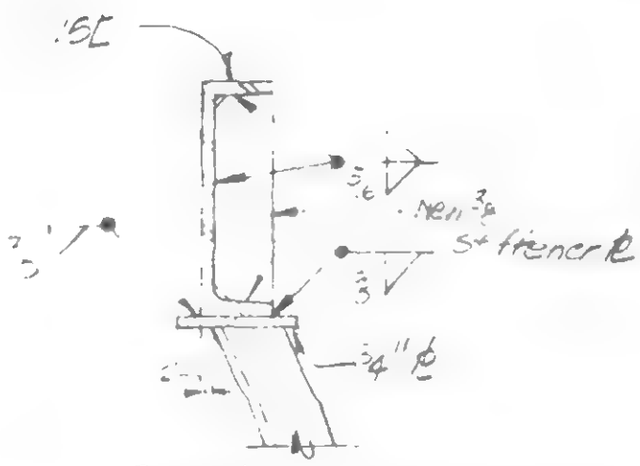

Section e-e

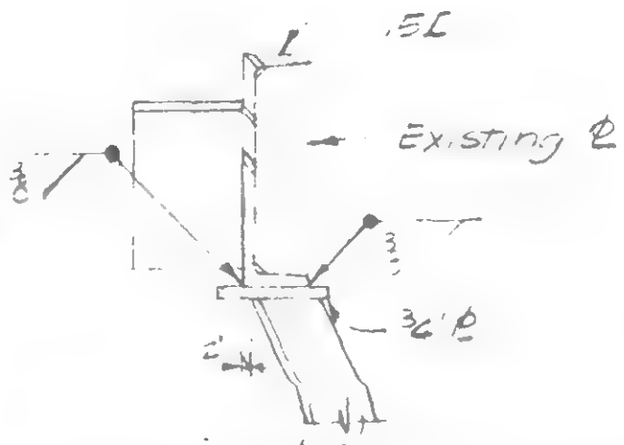

Section f-f

Notes

1. All additional detail material to be Fy=50 ksi.
2. All welding electrodes to be E 70xx

Reinf. not required col. 701

DETAIL 987E Col. 701 & 708 Fl. 106

DETAIL 987F Col. 80. & 807 New

19-A-987.5

REGISTERED PROFESSIONAL ENGINEER LESLIE E. ROBERTSON NO 34360 CITY OF THE STATE OF NEW YORK

DRAWN

REVIEWED

SKILLING HELLE CHRISTIANSEN ROBERTSON — Structural & Civil Engineers

WTC 44400

PROJECT THE WORLD TRADE CENTER | TITLE FL. 106 CONNECTION DETAILS | DATE 5/19/79

VISIONS

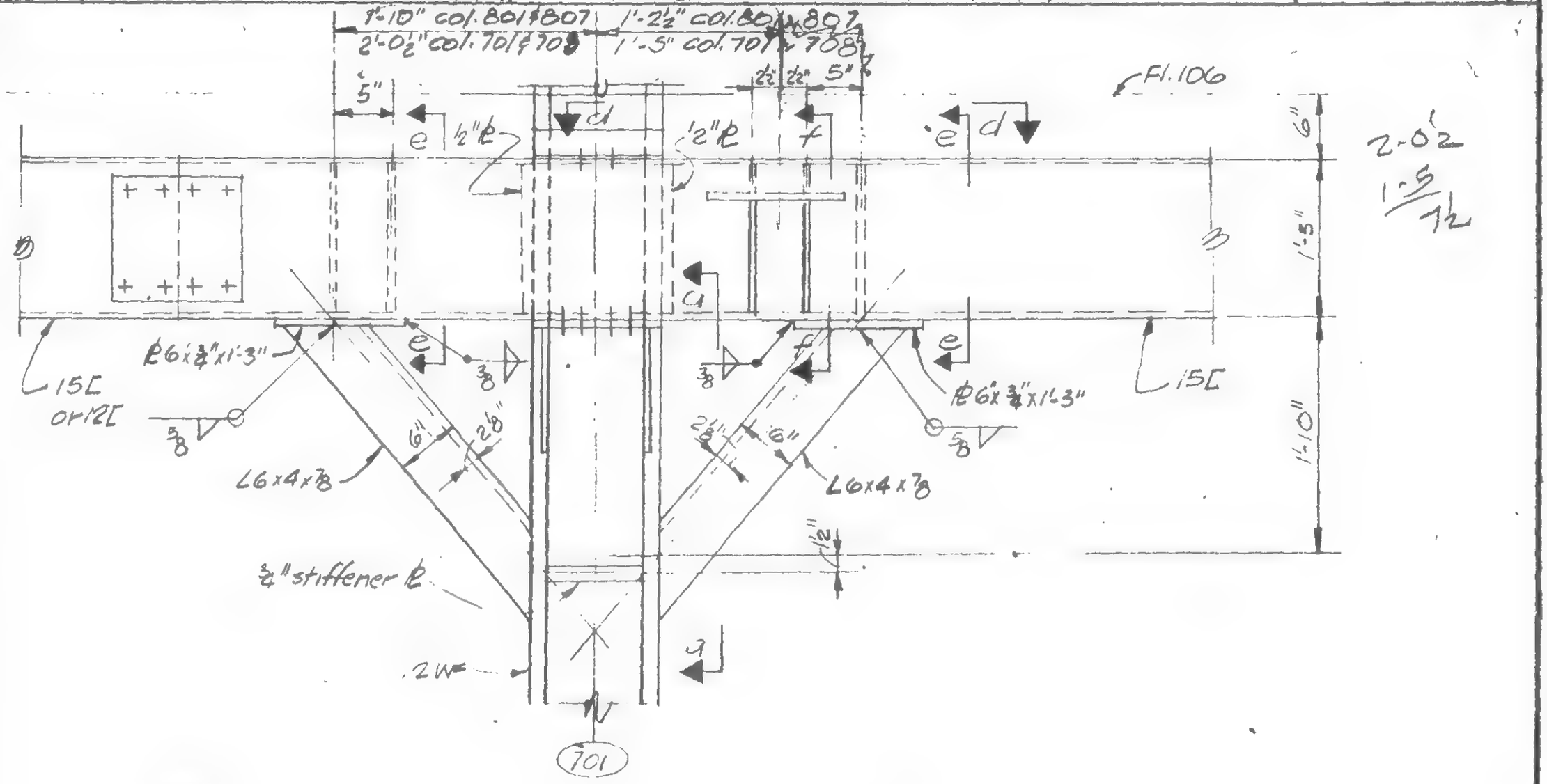

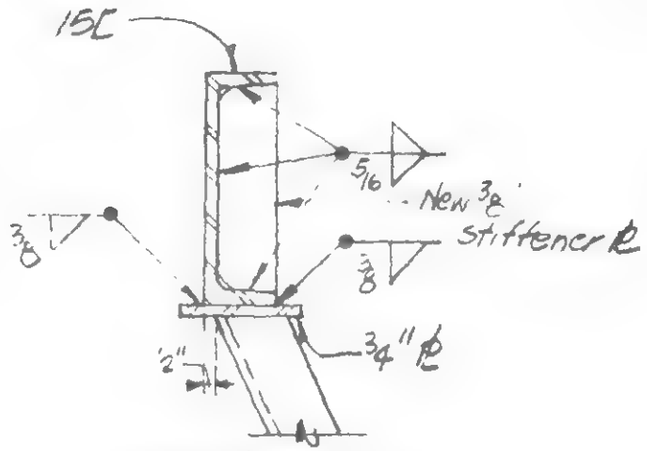

Section e-e

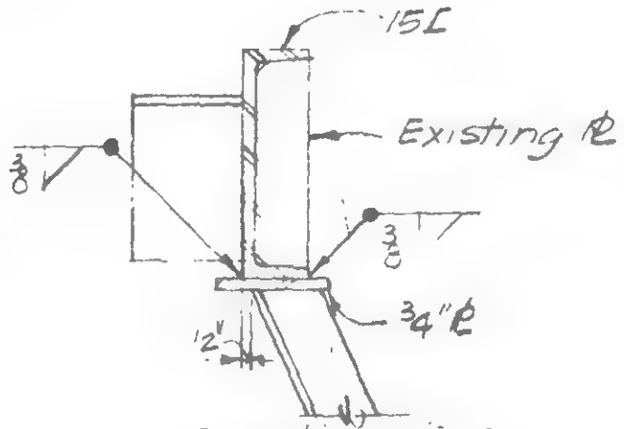

Section f-f

Notes:
1. All additional detail material to be F_y=50 ksi.
2. All welding electrodes to be E70xx

Reinf. not required col. 701

DETAIL 987E Col. 701 & 708 New.

DETAIL 987F Col. 801 & 807 New

19-A-987.5

PROFESSIONAL ENGINEER — L. ROBERTSON — NO. 34360 — OF THE STATE OF NEW YORK

DESIGNED

DRAWN

CHECKED

Wab

SKILLING, HELLE, CHRISTIANSEN, ROBERTSON — Structural & Civil Engineers

PROJECT: THE WORLD TRADE CENTER | TITLE: FL.106 CONNECTION DETAILS | DATE: 1-27-71

REVISIONS

Printed 7/30/71

10/6/71

5/9/79 B

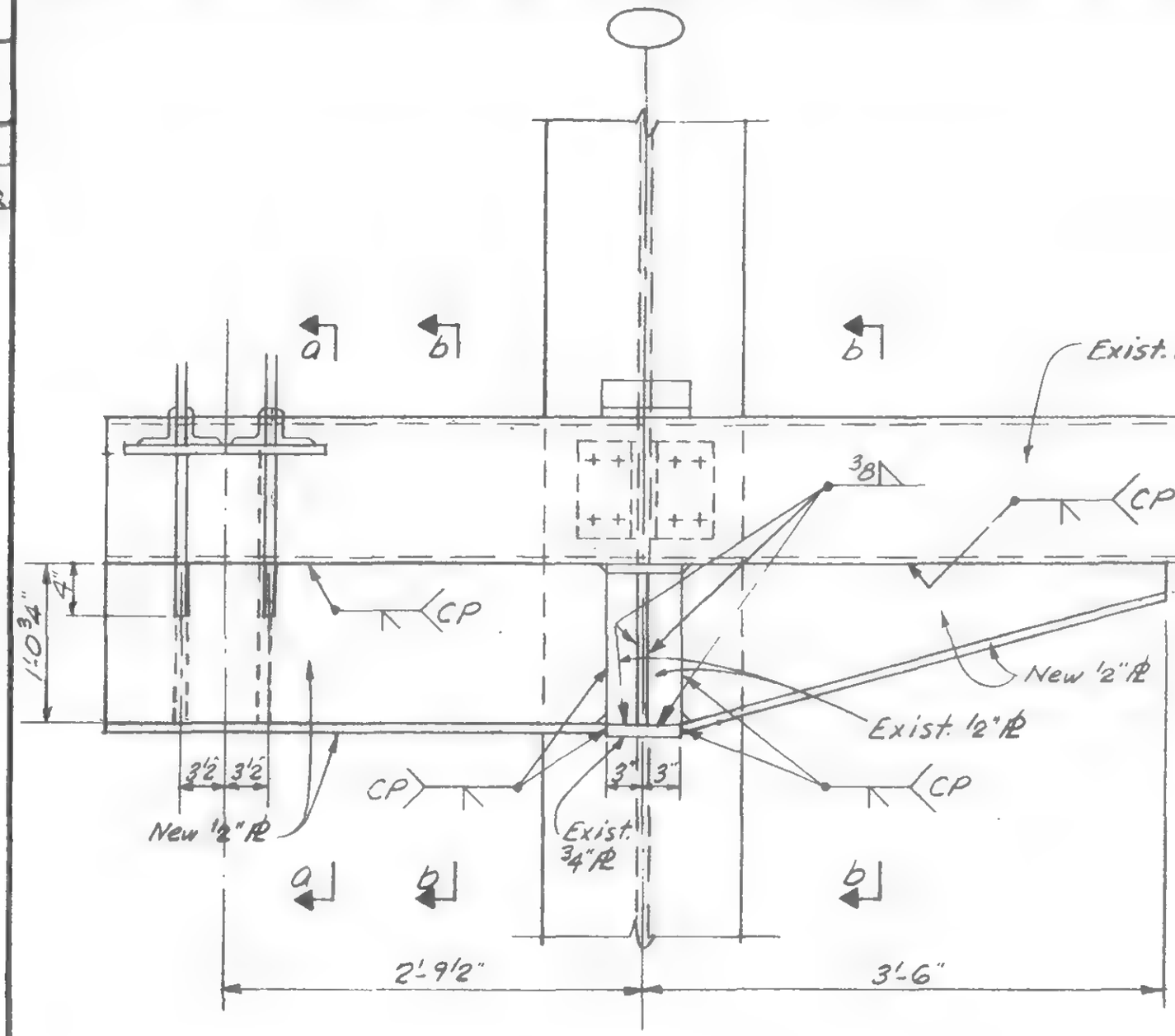

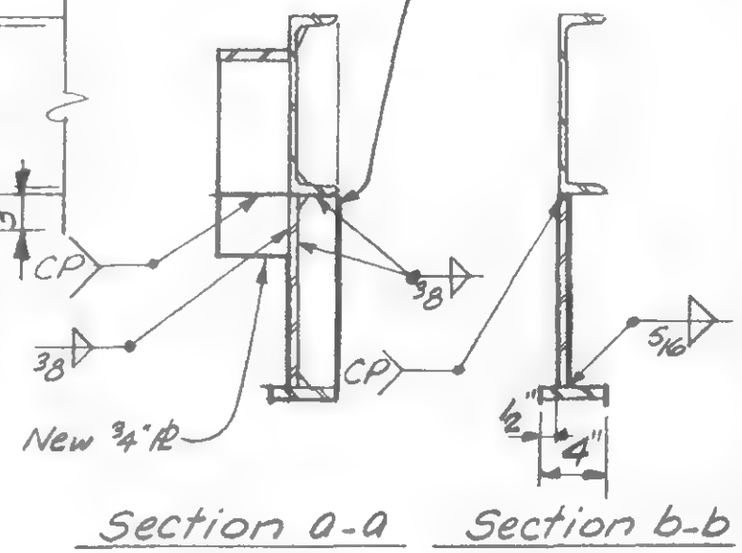

Section a-a Section b-b

Detail 987G

Column	1008 as shown	existing
Column	1001 opp. hand	existing
Column	501 as shown	Reinf. not required.
Column	508 as shown	New

LICENSED PROFESSIONAL ENGINEER — LESLIE E. ROBERTSON — No 34360 — UNIVERSITY OF THE STATE OF NEW YORK

DESIGNED W. BREWER

DRAWN A. FRANQUI

REVIEWED LER

19-A-987G

SKILLING, HELLE, CHRISTIANSEN, ROBERTSON — Structural & Civil Engineers

PROJECT: THE WORLD TRADE CENTER | TITLE: TRUSS DETAILS - FLOOR 106 | DATE: 1/27/71

REVISIONS

7/30/71
Printed
5/9/79

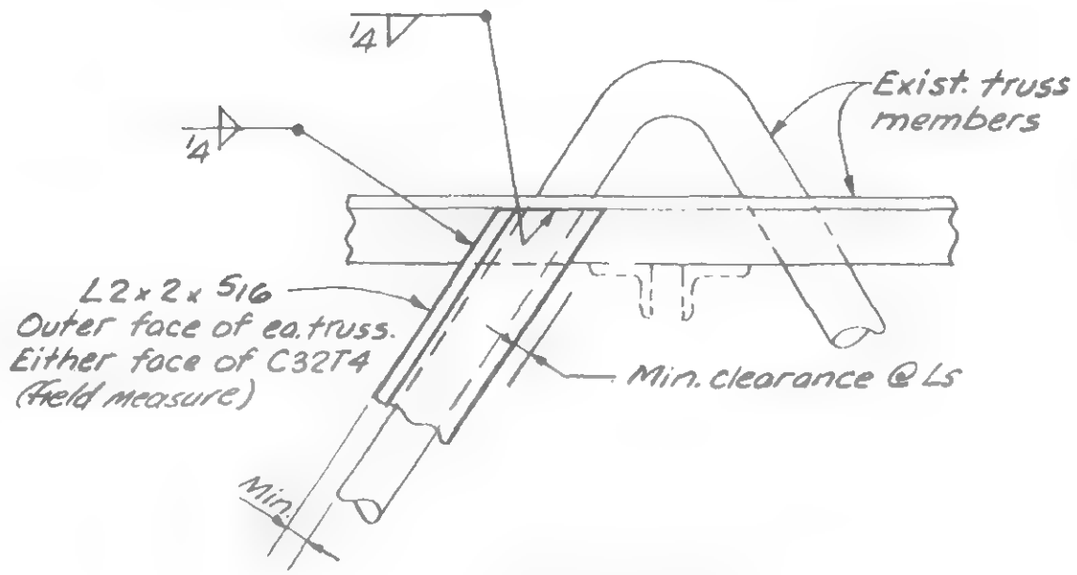

Detail 988A

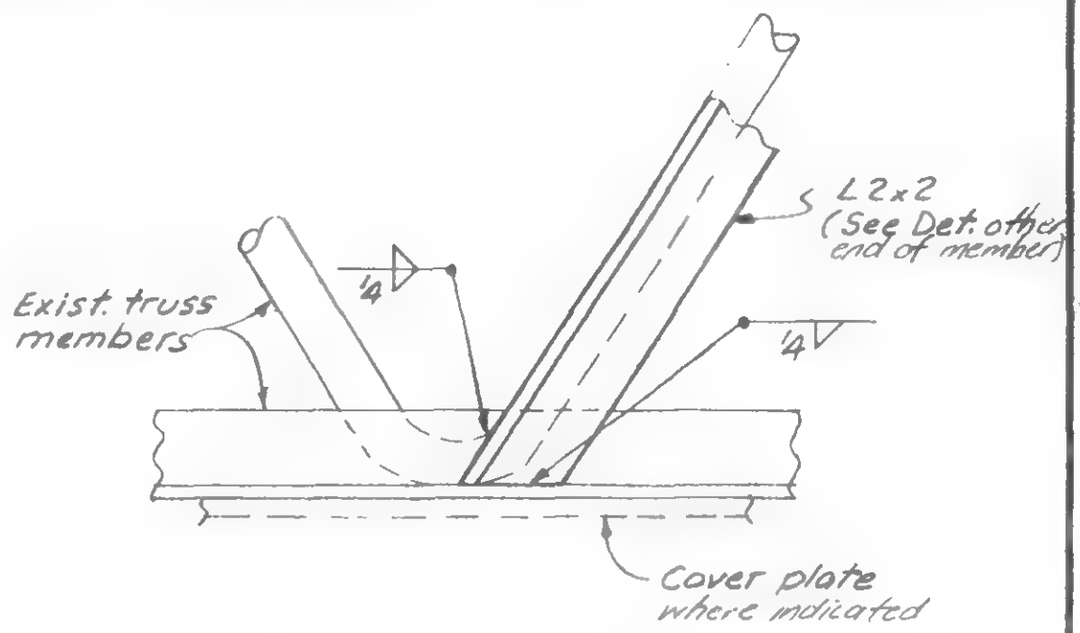

Detail 988B

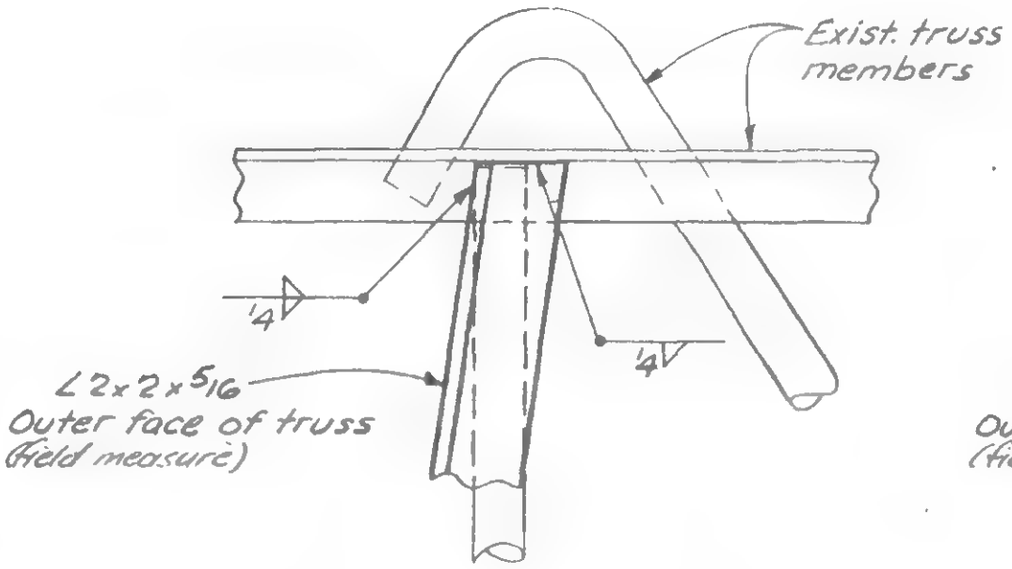

Detail 988C

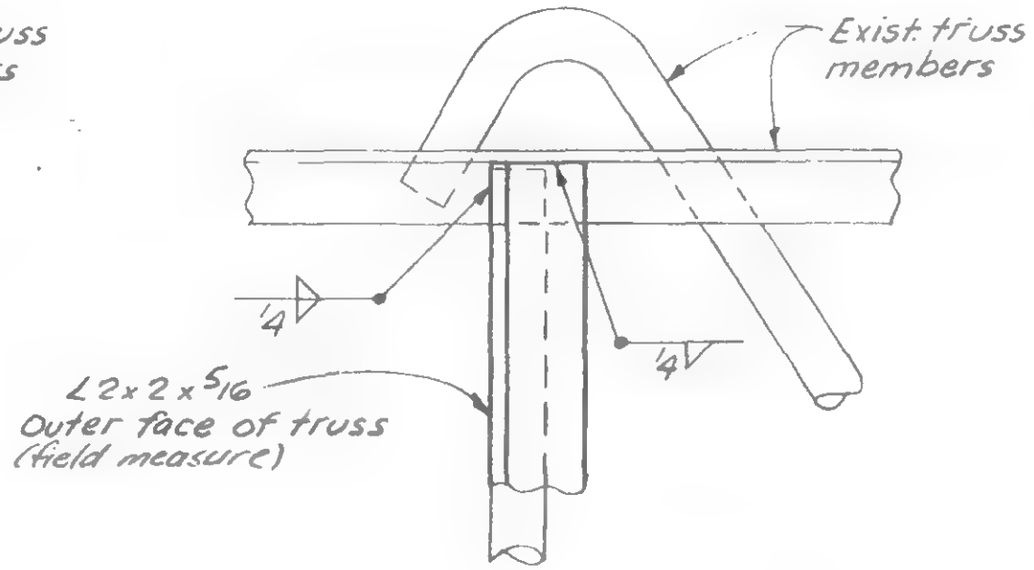

Detail 988D

For Notes see 19-A-985.1

LICENSED PROFESSIONAL ENGINEER
LESLIE E. ROBERTSON
No 34360
UNIVERSITY OF THE STATE OF NEW YORK

DESIGNED H. ROET
DRAWN A. FRANQUI
REVIEWED Wolf

19-A-988.1

SKILLING HELLE CHRISTIANSEN ROBERTSON Structural & Civil Engineers

PROJECT THE WORLD TRADE CENTER | TITLE TRUSS DETAILS - FLOOR 106 | DATE 5/9/79

REVISIONS

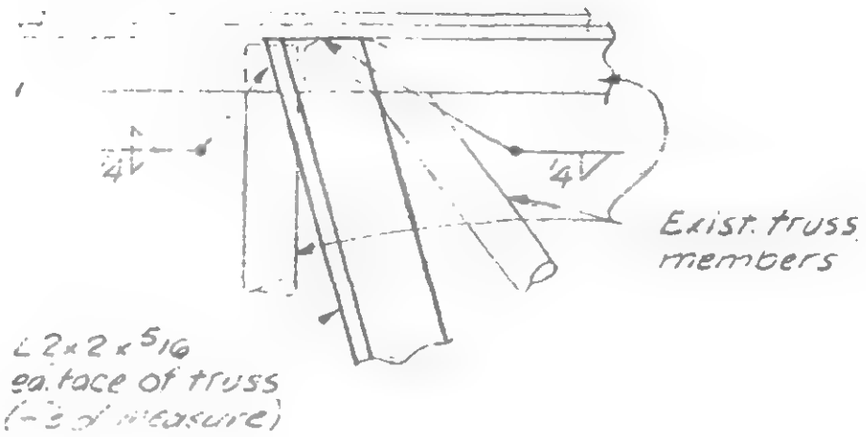

Detail 988E

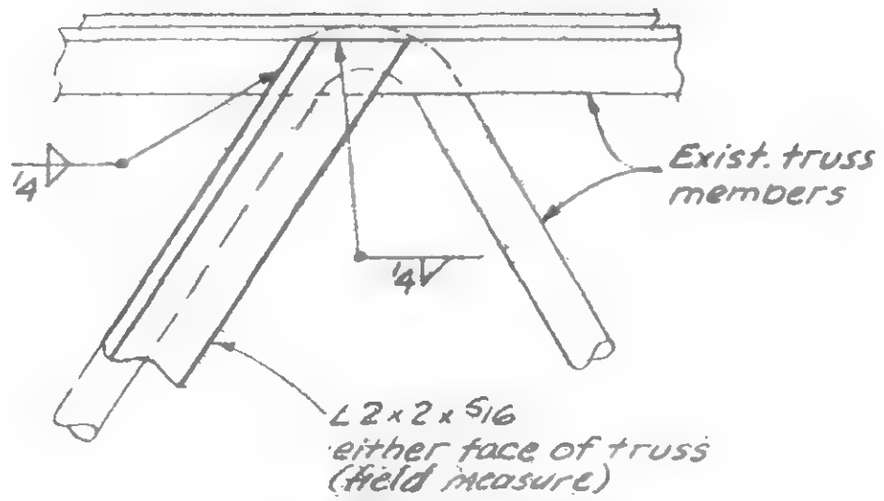

Detail 988G

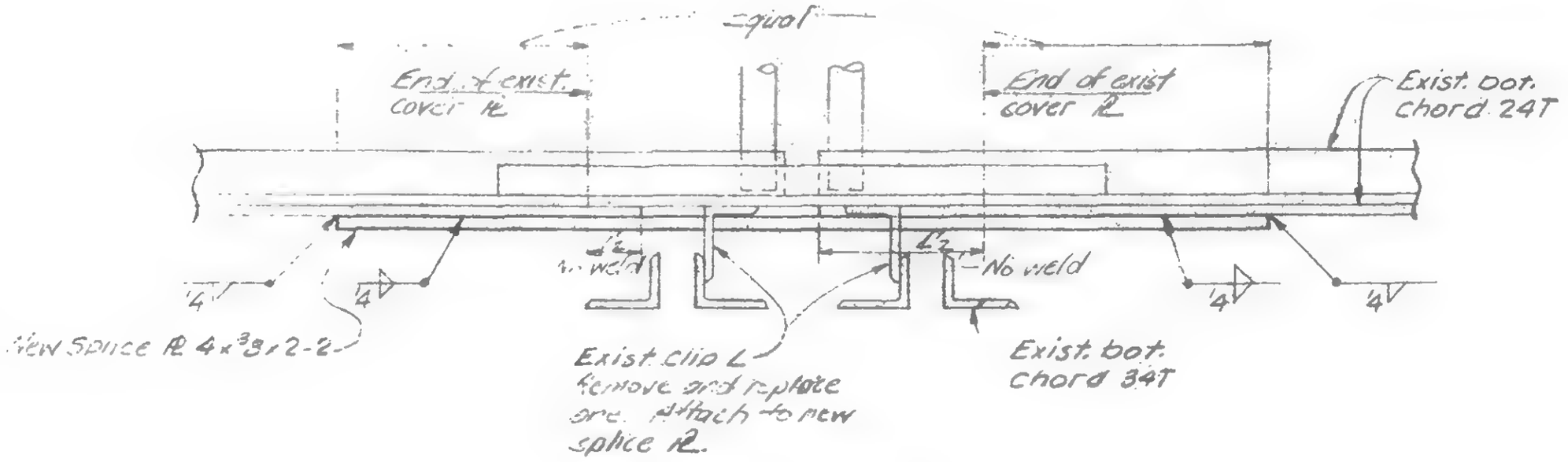

Detail 988F

LESLIE E ROBERTSON LICENSED PROFESSIONAL ENGINEER NO 34360 UNIVERSITY OF THE STATE OF NEW YORK

DESIGNED F POET

DRAWN A FRANCUI

REVISED Dab

19-A-988.2

SKILLING HELLE CHRISTIANSEN ROBERTSON — Structural & Civil Engineers

PROJECT THE WORLD TRADE CENTER

TRUSS DETAILS - FLOOR 106

DATE 1/27/'79

REVISIONS
7/30/71
5/9/79

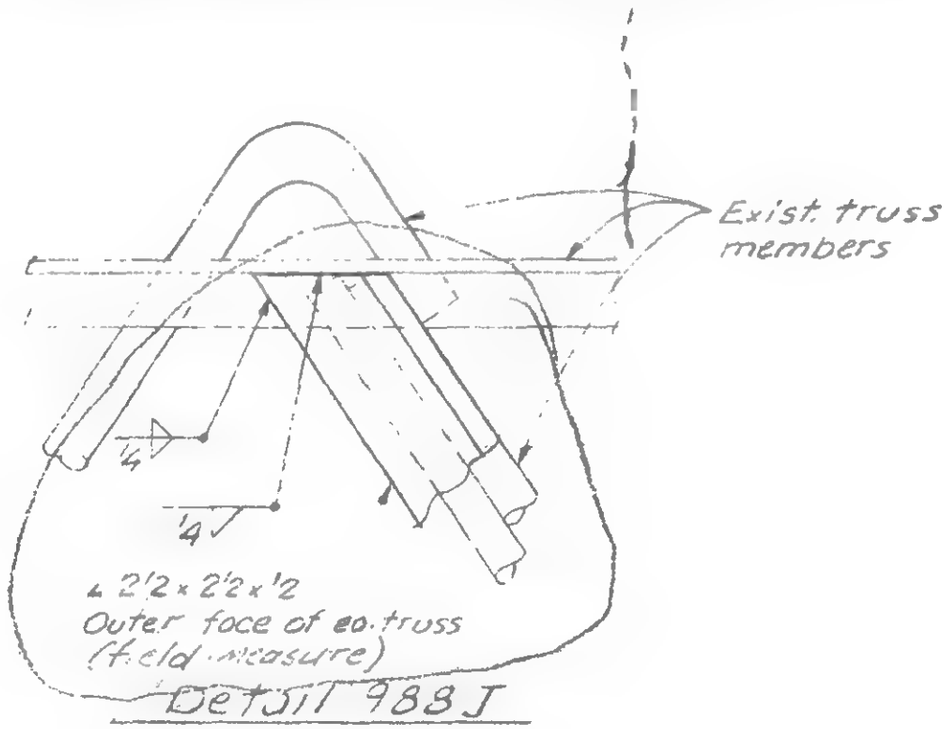

Detail 988 J

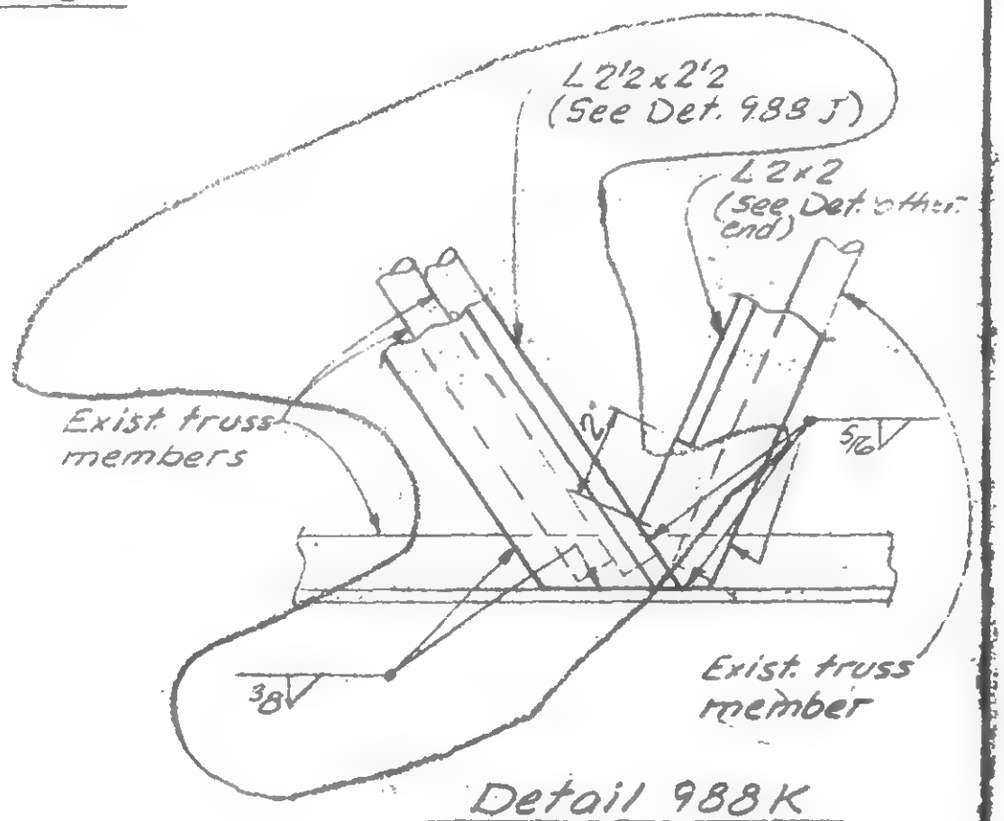

Detail 988 K

LICENSED PROFESSIONAL ENGINEER
LESLIE E. ROBERTSON
NO 34360
STATE OF NEW YORK

DESIGNED H. ROET

DRAWN A. FRANCUI

REVIEWED

19-A-988.3

SKILLING, HELLE, CHRISTIANSEN, ROBERTSON — Structural & Civil Engineers

WTC 444.00

PROJECT THE WORLD TRADE CENTER | TITLE TRUSS DETAILS - FL 106 | DATE 1/27/71

VISIONS

7/30/71

Printed 5/9/79

11/30/79 4

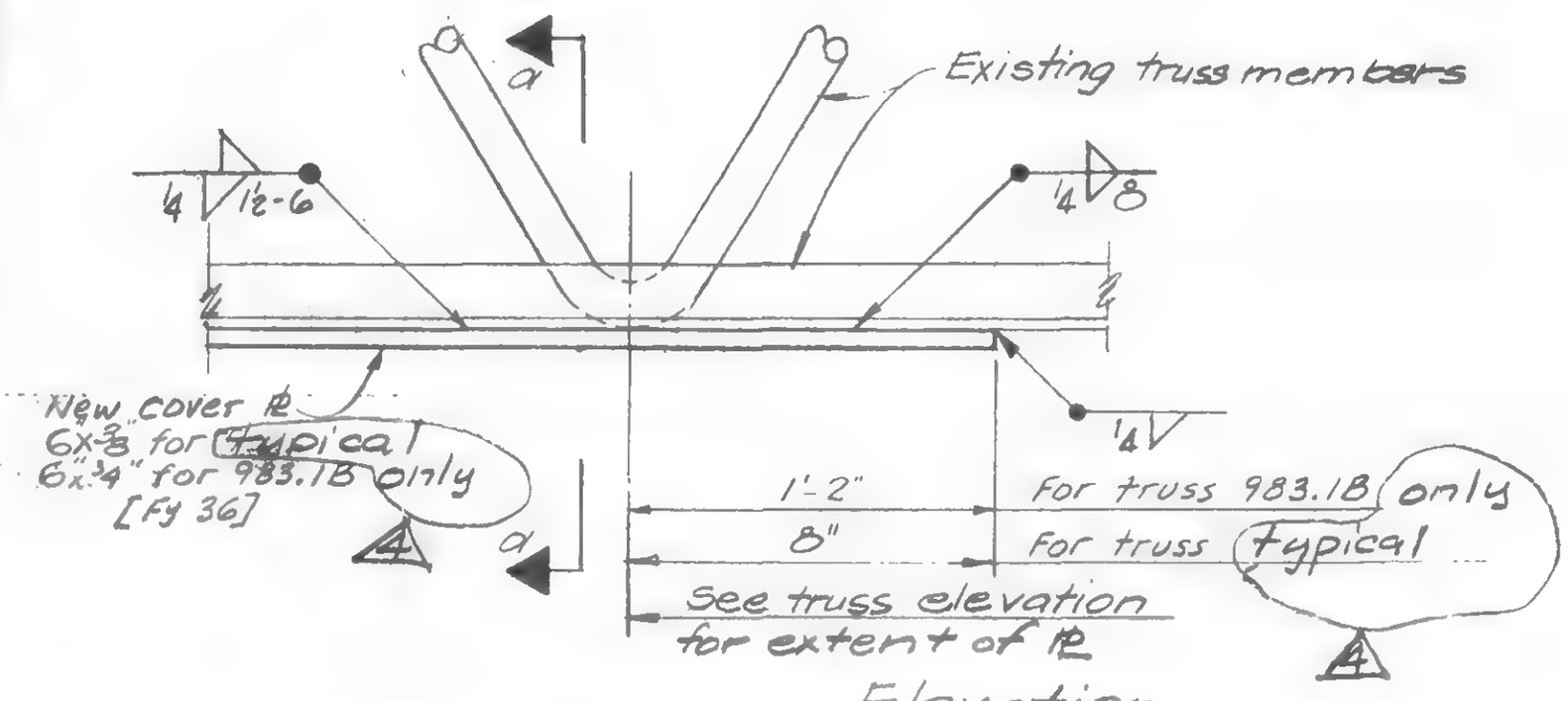

Elevation

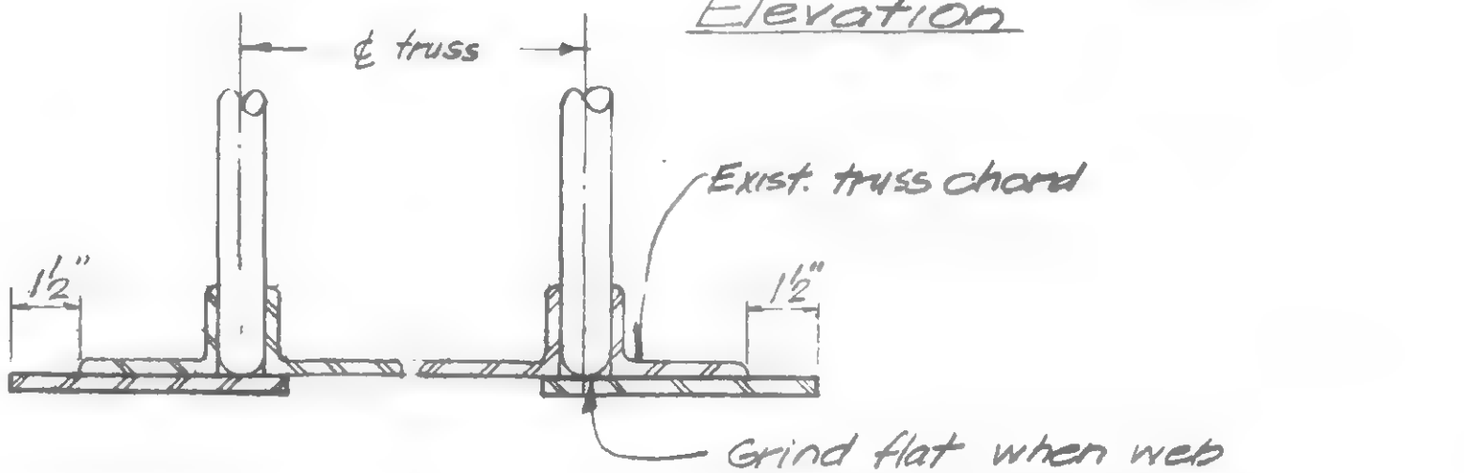

Section a-a

DETAIL 989A

LICENSED PROFESSIONAL ENGINEER
LESLIE E. ROBERTSON
No 34360
UNIVERSITY OF THE STATE OF NEW YORK

DRAWN P. Orelli

REVIEWED WAB

19-A-989.1

SKILLING. HELLE, CHRISTIANSEN; ROBERTSON — Structural & Civil Engineers

PROJECT: THE WORLD TRADE CENTER | TITLE: TRUSS DETAILS - FL 106 | DATE: 1/27/71

REVISIONS:

7/30/71

Printed 5/9/79

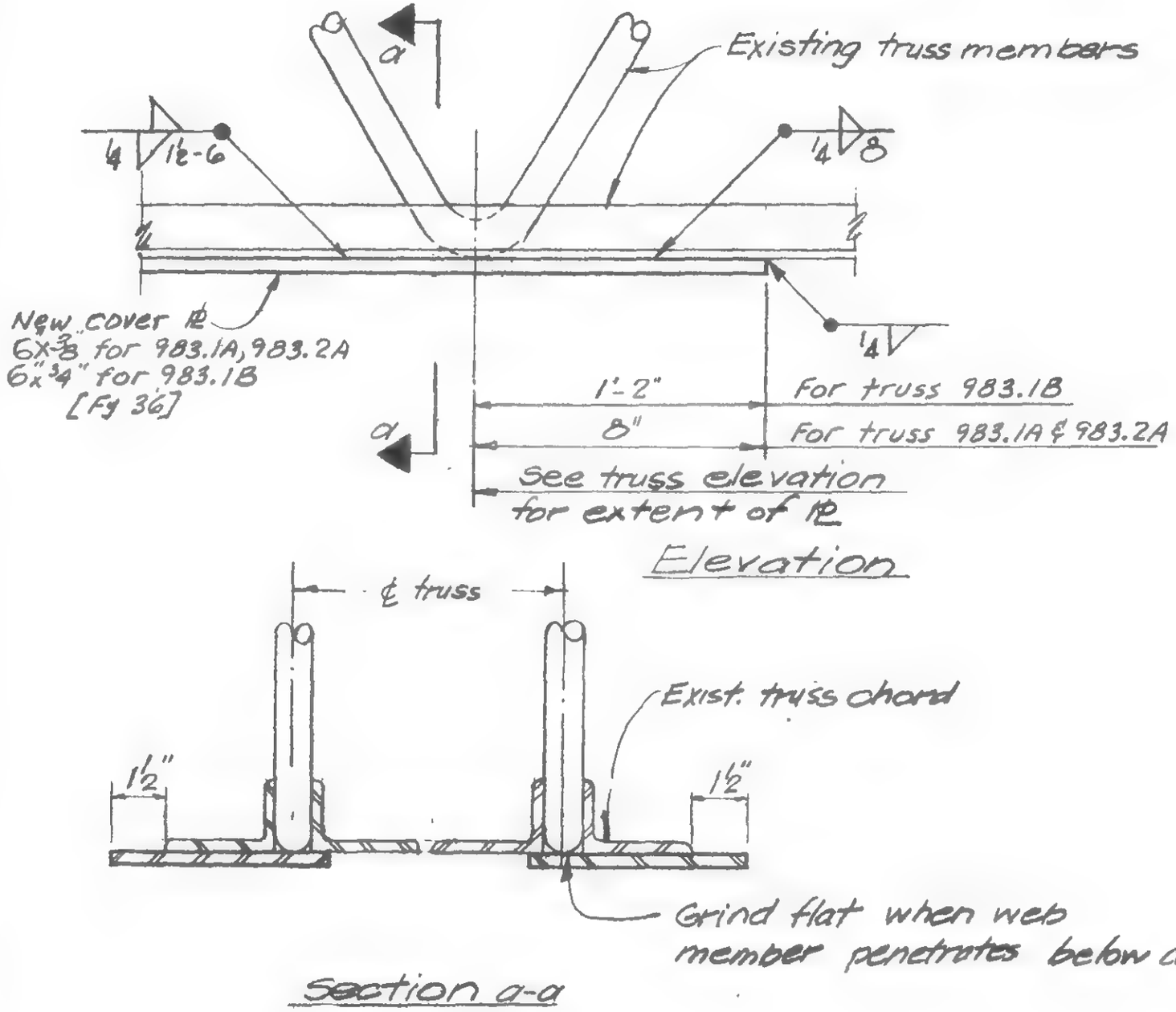

Elevation

Section a-a

DETAIL 989A

LICENSED PROFESSIONAL ENGINEER — LESLIE E. ROBERTSON — No. 34990 — UNIVERSITY OF THE STATE OF NEW YORK

DESIGNED

DRAWN: P. Orelli

REVIEWED

19-A-9891

SKILLING, HELLE, CHRISTIANSEN, ROBERTSON — Structural & Civil Engineers

PROJECT THE WORLD TRADE CENTER | TITLE TRUSS DETAIL - FL. 106 | DATE 5/9/79

REVISIONS

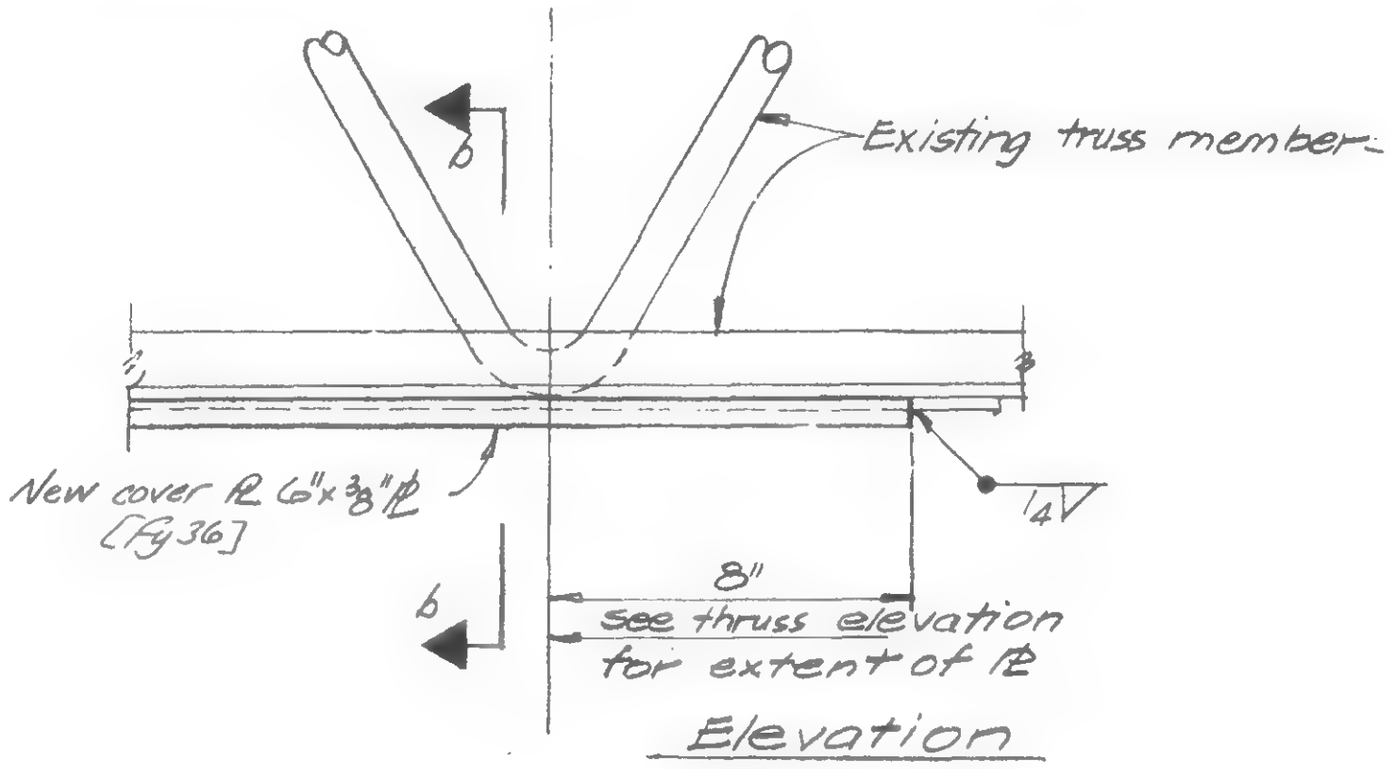

Elevation

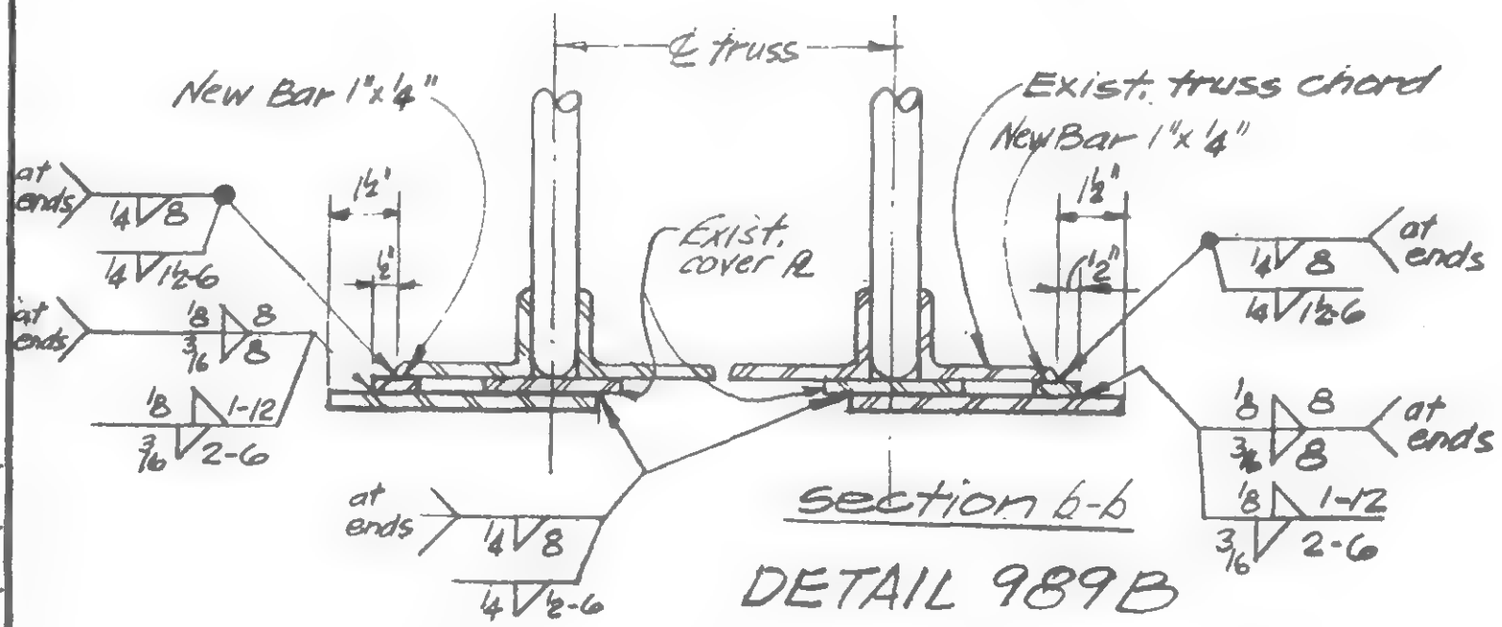

section b-b

DETAIL 989B

LICENSED PROFESSIONAL ENGINEER
LESLIE E. ROBERTSON
NO. 34380
UNIVERSITY OF THE STATE OF NEW YORK

DESIGNED

DRAWN P. Ocelli

REVIEWED WAB

19-A-989.2

SKILLING, HELLE, CHRISTIANSEN, ROBERTSON — Structural & Civil Engineers

WTC 447.00

PROJECT THE WORLD TRADE CENTER

TITLE TRUSS DETAILS - FL. 106

DATE 5/9/79

REVISIONS

11-30-79 △4

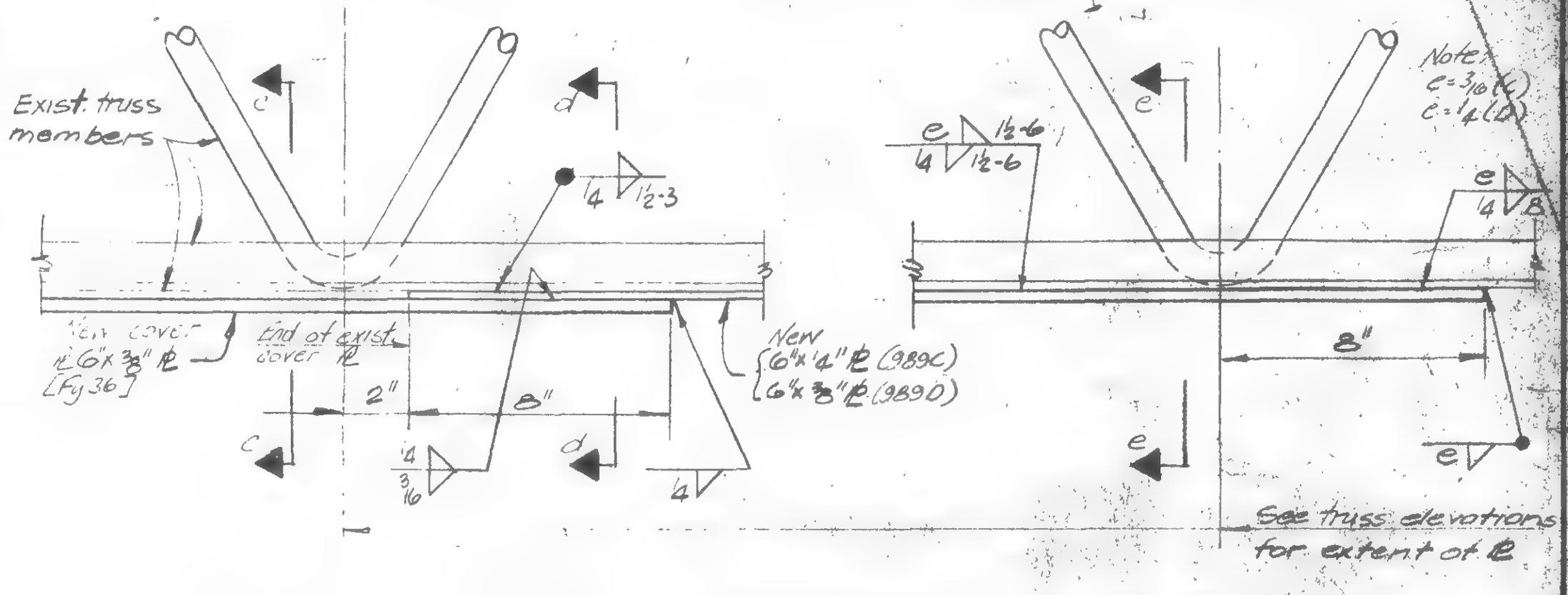

Elevation

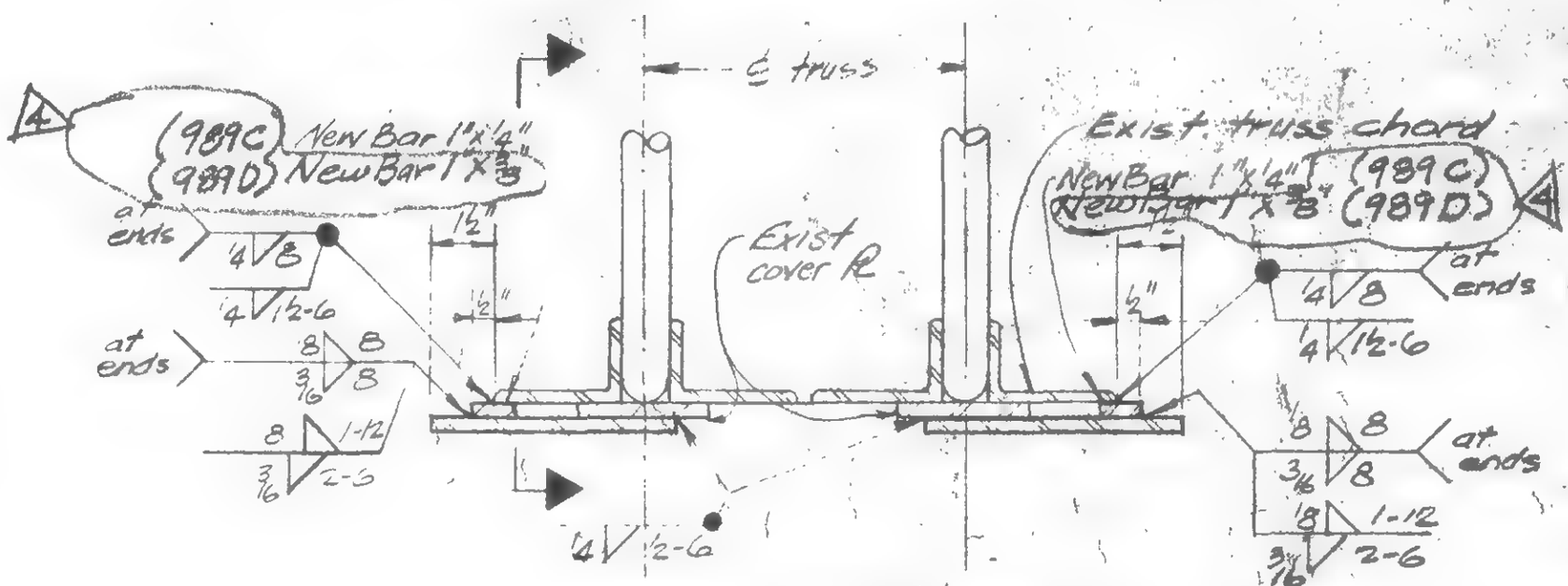

Section c-c

DETAIL 989 C & D

LICENSED PROFESSIONAL ENGINEER LESLIE E. ROBERTSON No 34360 UNIVERSITY OF THE STATE OF NEW YORK

NED

DRAWN P. Ocelli

REVIEWED WAB

19-A-989.3

SKILLING HELLE CHRISTIANSEN ROBERTSON — Structural & Civil Engineers

PROJECT: THE WORLD TRADE CENTER | TITLE: TRUSS DETAILS - FL. 106 | DATE: 5/9/79

REVISIONS

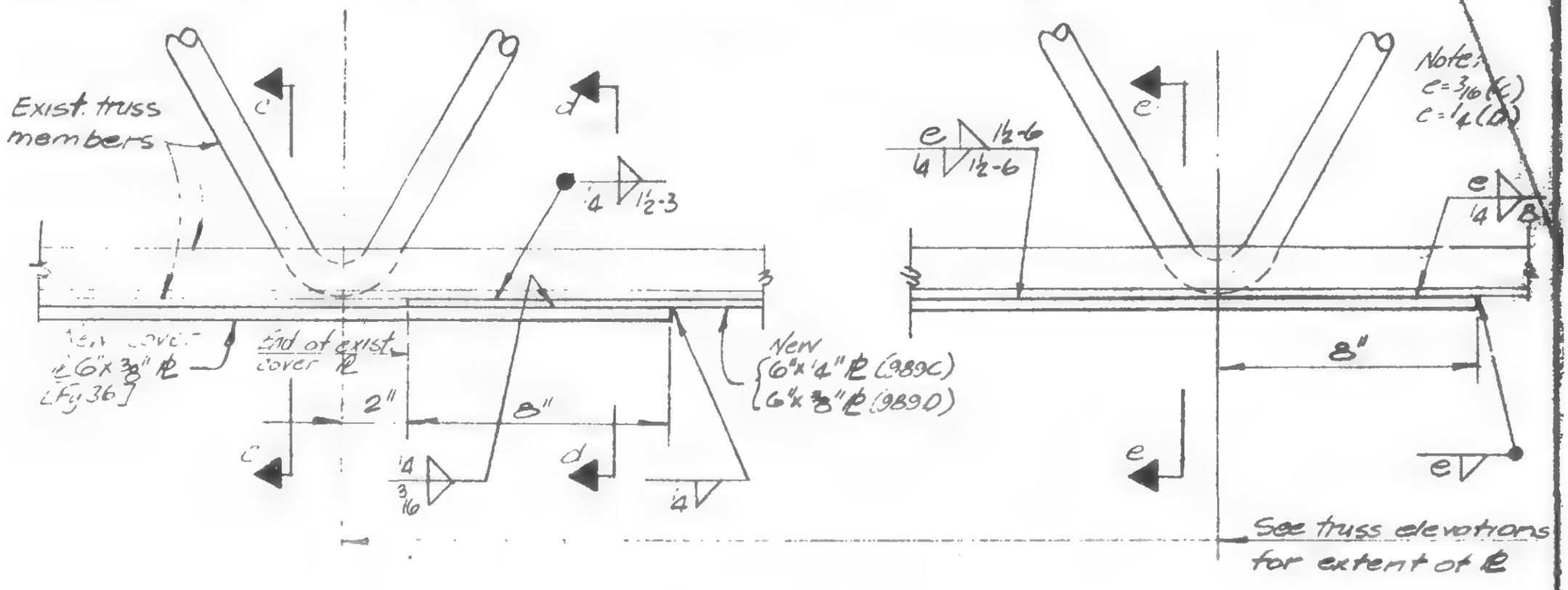

Elevation

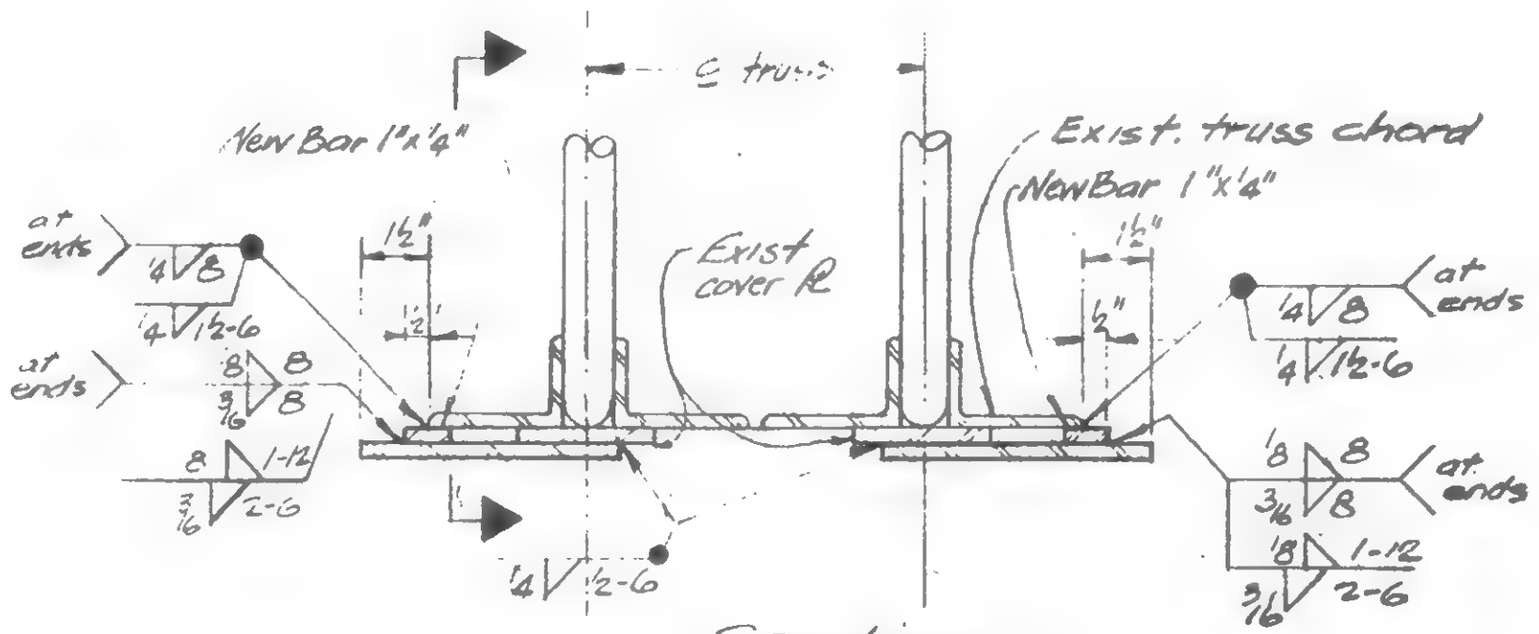

Section c-c

DETAIL 989 C & D

LICENSED PROFESSIONAL ENGINEER LESLIE E. ROBERTSON No 34360 UNIVERSITY OF THE STATE OF NEW YORK

SIGNED

DRAWN P. Ocele

REVIEWED WAB

19-A-989.3

SKILLING HELLE CHRISTIANSEN ROBERTSON — Structural & Civil Engineers

PROJECT THE WORLD TRADE CENTER | TITLE TRUSS DETAILS - FL. 106 | DATE 5/9/79

REVISIONS

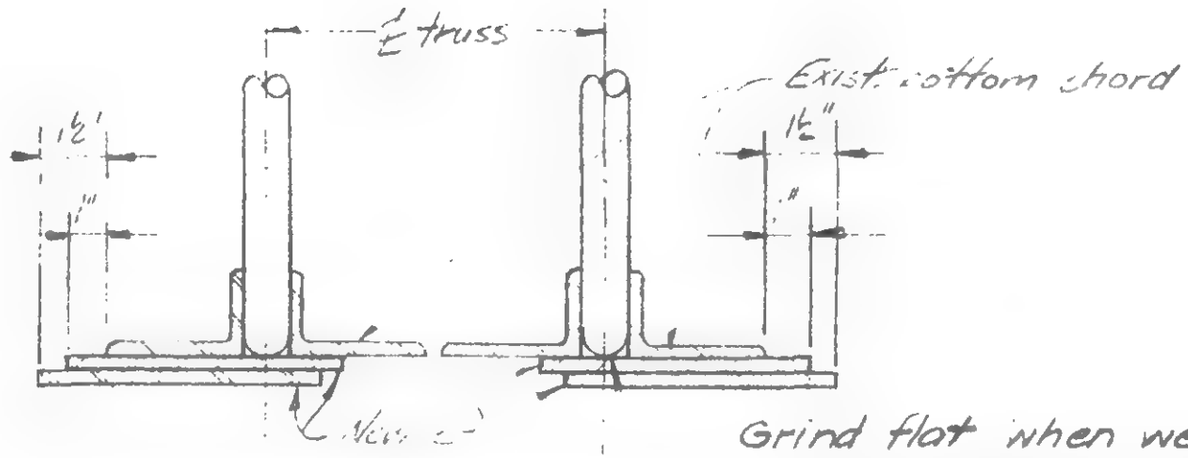

Grind flat when web member penetrates below chord

Section d-d

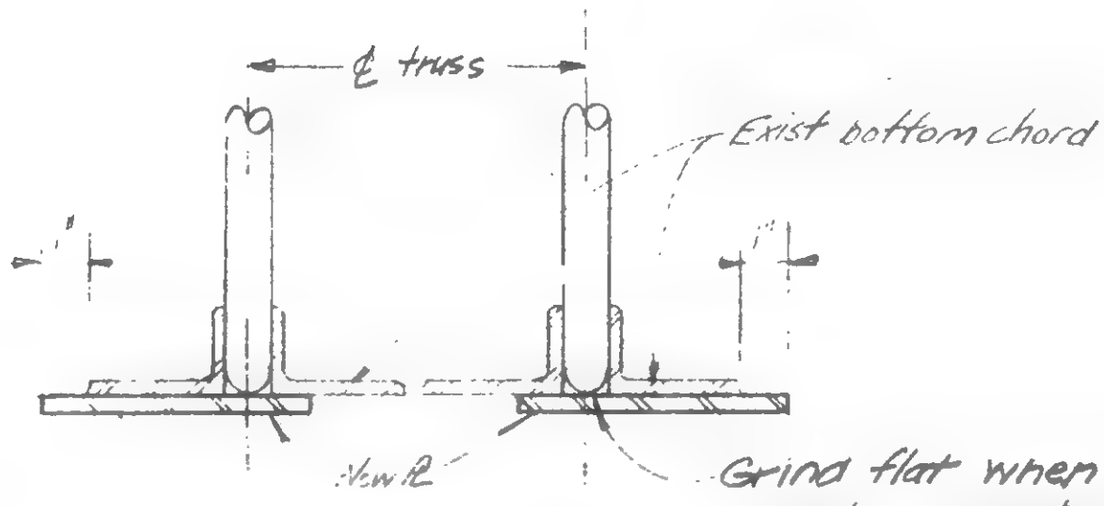

Grind flat when web member penetrates below chord

Section e-e

LICENSED PROFESSIONAL ENGINEER · LESLIE E. ROBERTSON · NO 34360 · UNIVERSITY OF THE STATE OF NEW YORK

DESIGNED

DRAWN A Orsie

REVIEWED

19-A-989.4

SKILLING HELLE CHRISTIANSEN ROBERTSON — Structural & Civil Engineers

PROJECT THE WORLD TRADE CENTER | TITLE TRUSS DETAILS – FL. 106 | DATE 5/9/79

REVISIONS

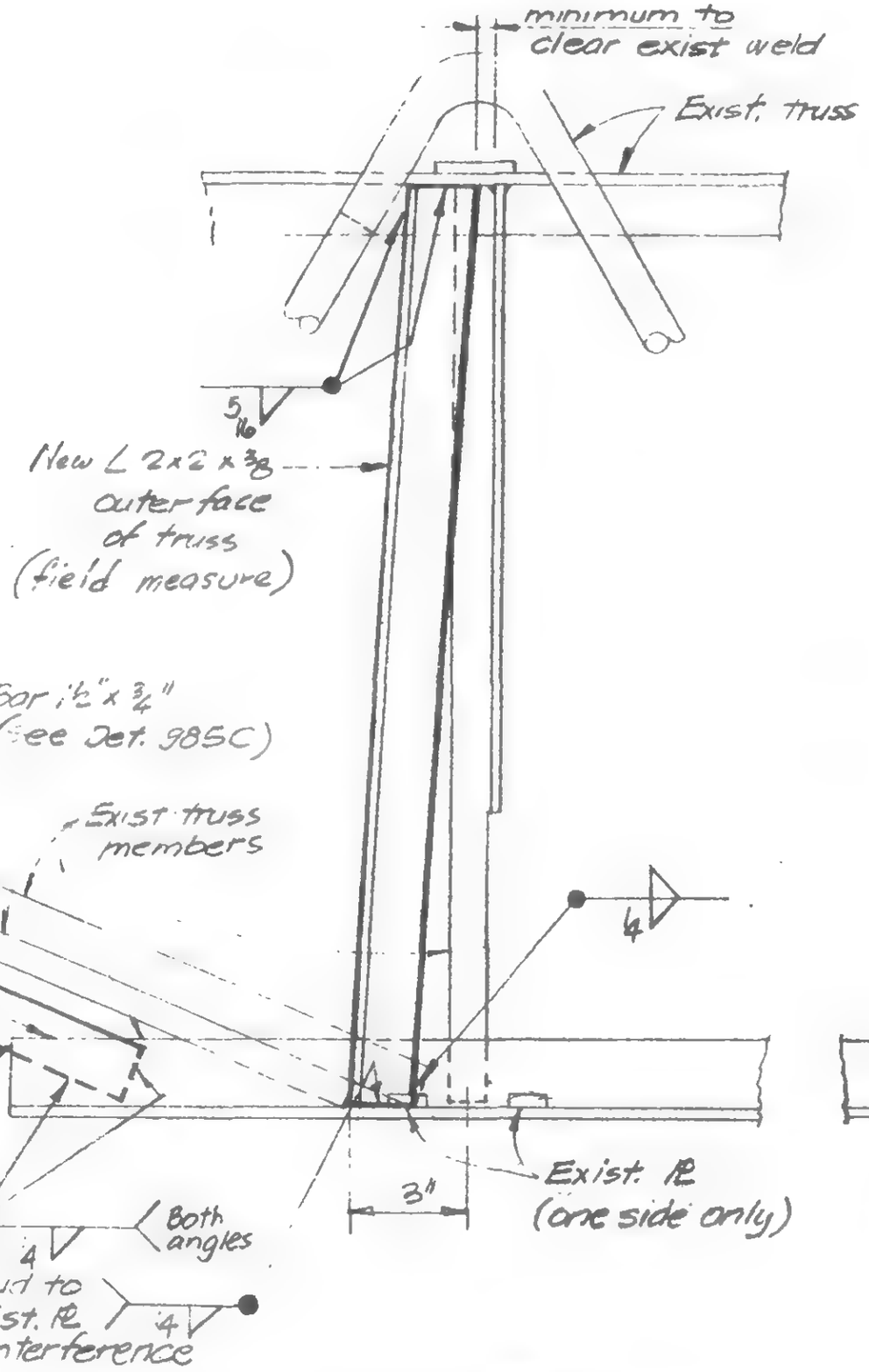

DETAIL 990A

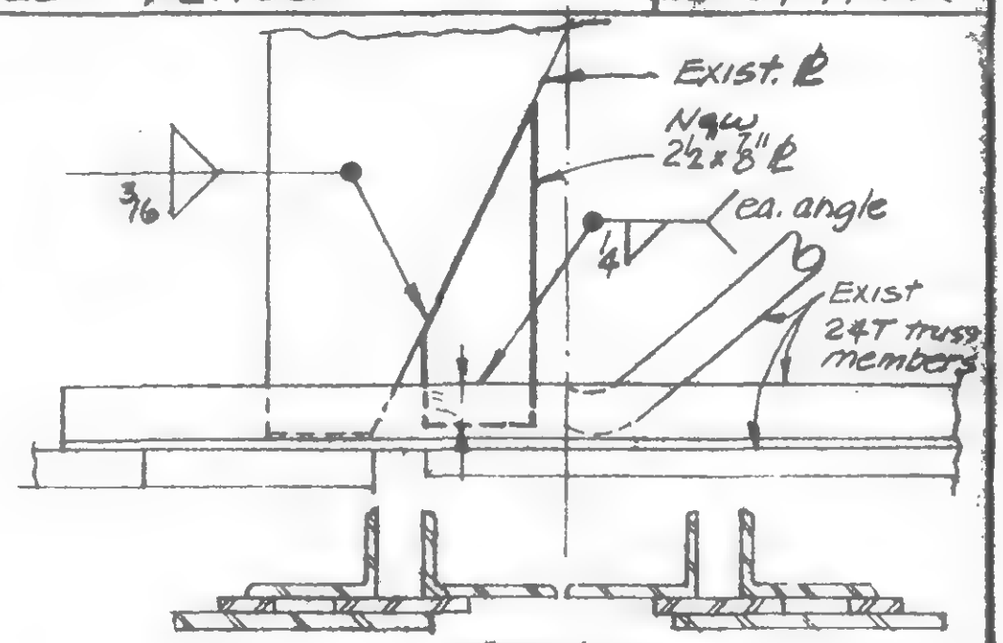

Section

DETAIL 990B

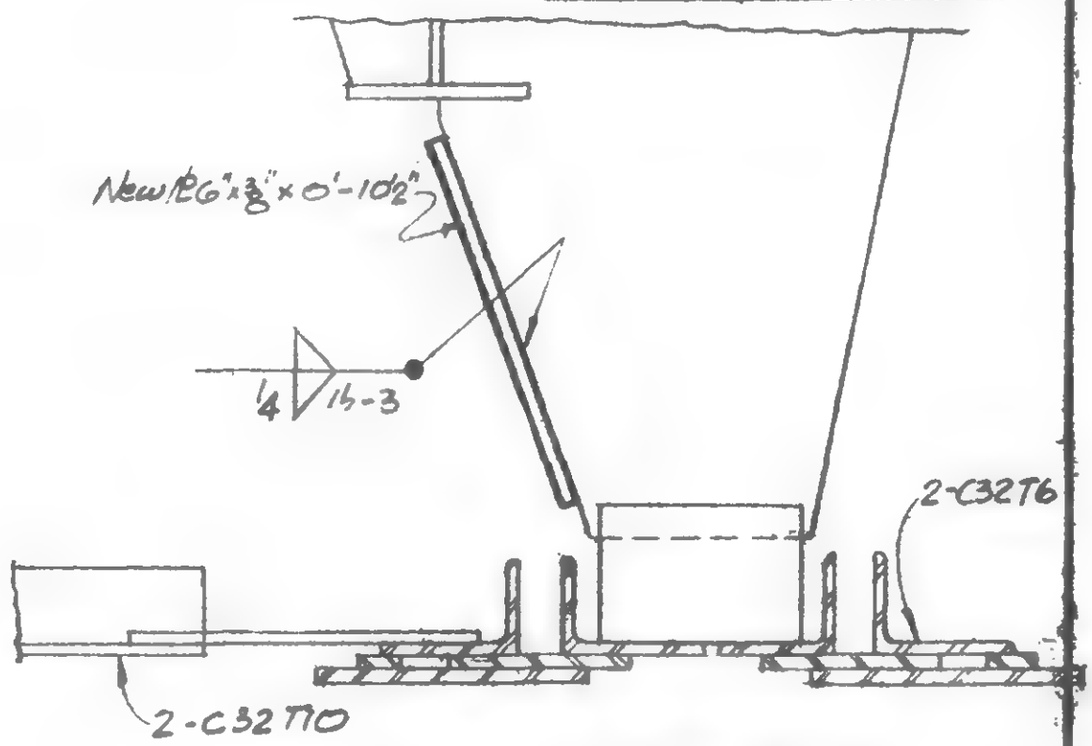

Section

DETAIL 990C

For Notes see 19-A-985.1

LICENSED PROFESSIONAL ENGINEER — LESLIE E ROBERTSON — NO 34360 — UNIVERSITY OF THE STATE OF NEW YORK

SIGNED

DRAWN

REVIEWED

19-A-990.1

SKILLING, HELLE, CHRISTIANSEN, ROBERTSON — Structural & Civil Engineers

PROJECT THE WORLD TRADE CENTER | TITLE TRUSS DETAILS - FL. 106 | DATE 5/9/79

REVISIONS

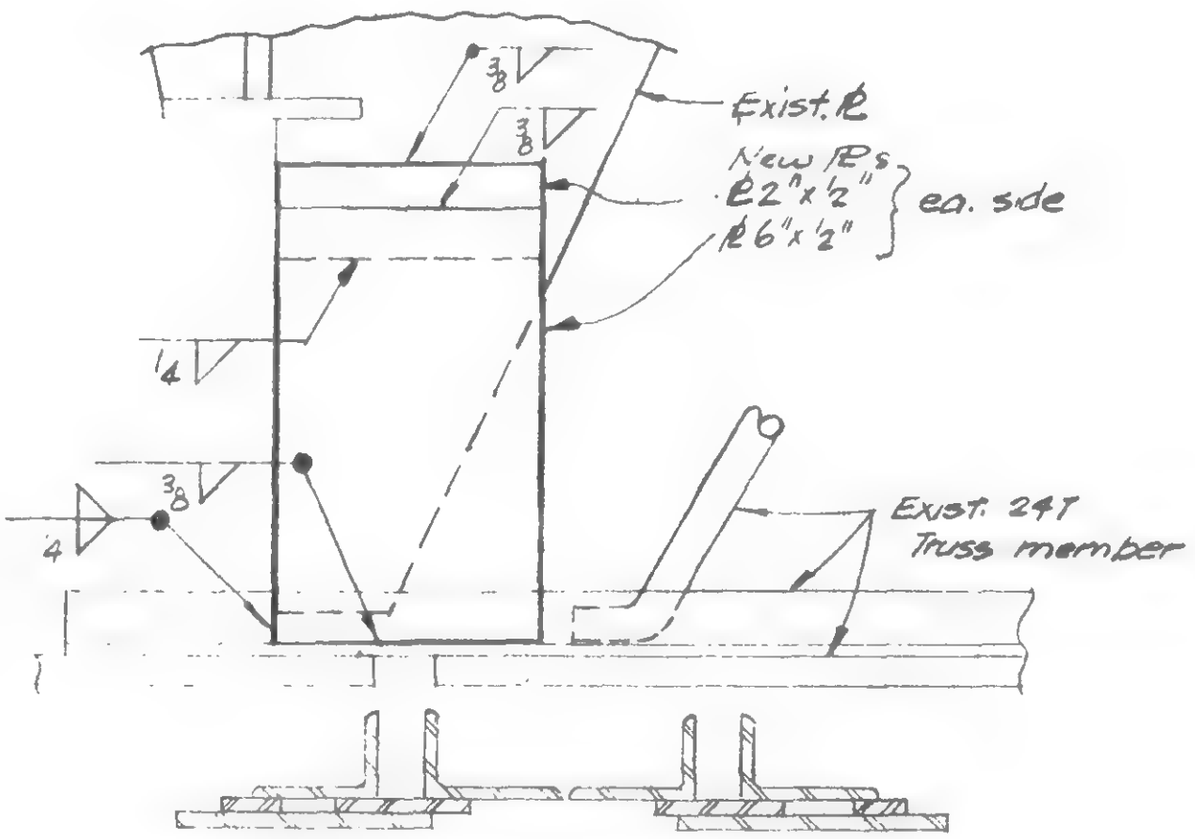

Section

DETAIL 990D

RECORDED PROFESSIONAL ENGINEER LESLIE E. ROBERTSON NO 34960 CITY OF THE STATE OF NEW YORK

SIGNED

DRAWN

REVIEWED

19-A-990.2

SKILLING HELLE CHRISTIANSEN ROBERTSON — Structural & Civil Engineers

PROJECT: THE WORLD TRADE CENTER | TITLE: TRUSS DETAILS - FL. 106 | DATE: 5/9/79

REVISIONS

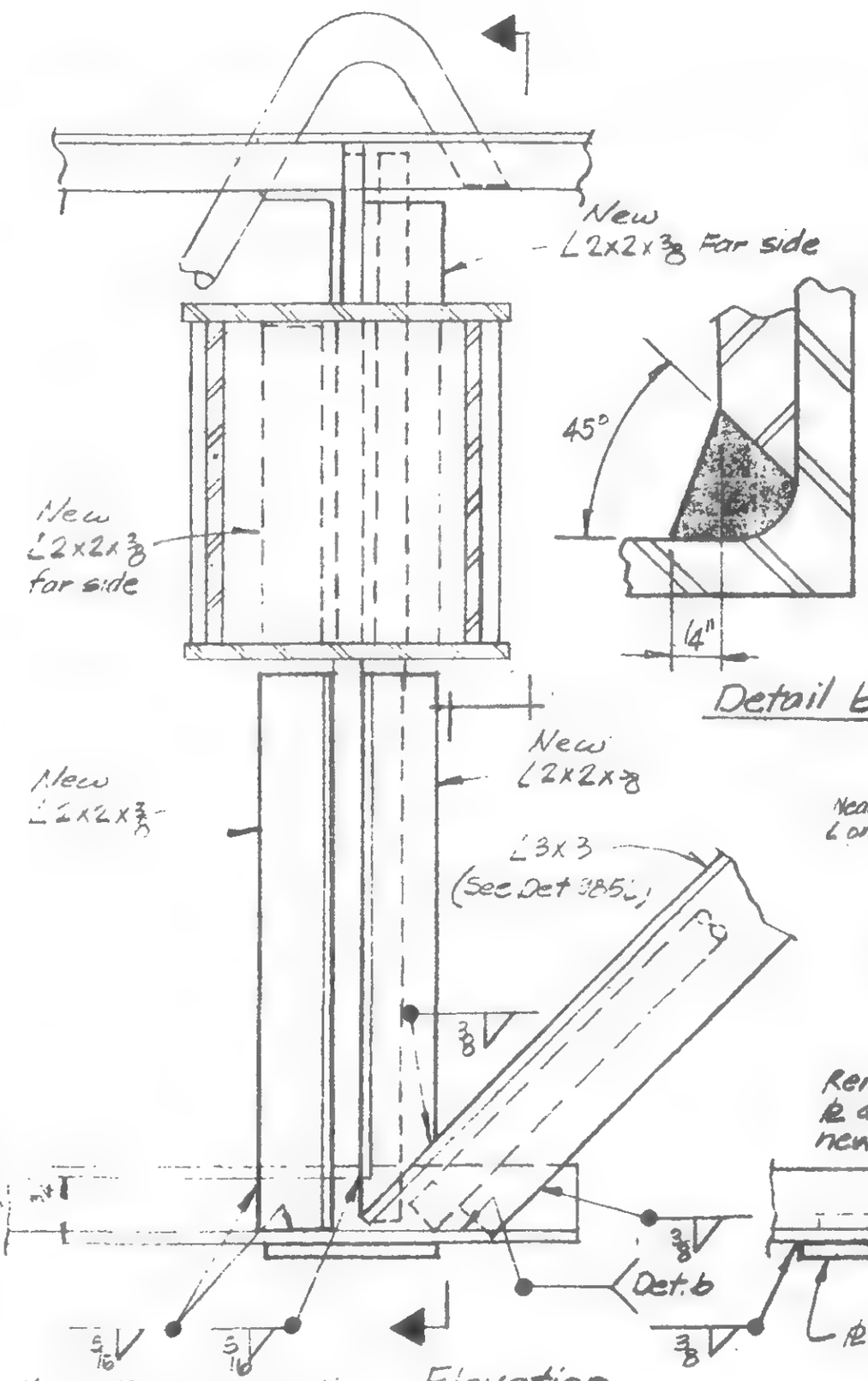

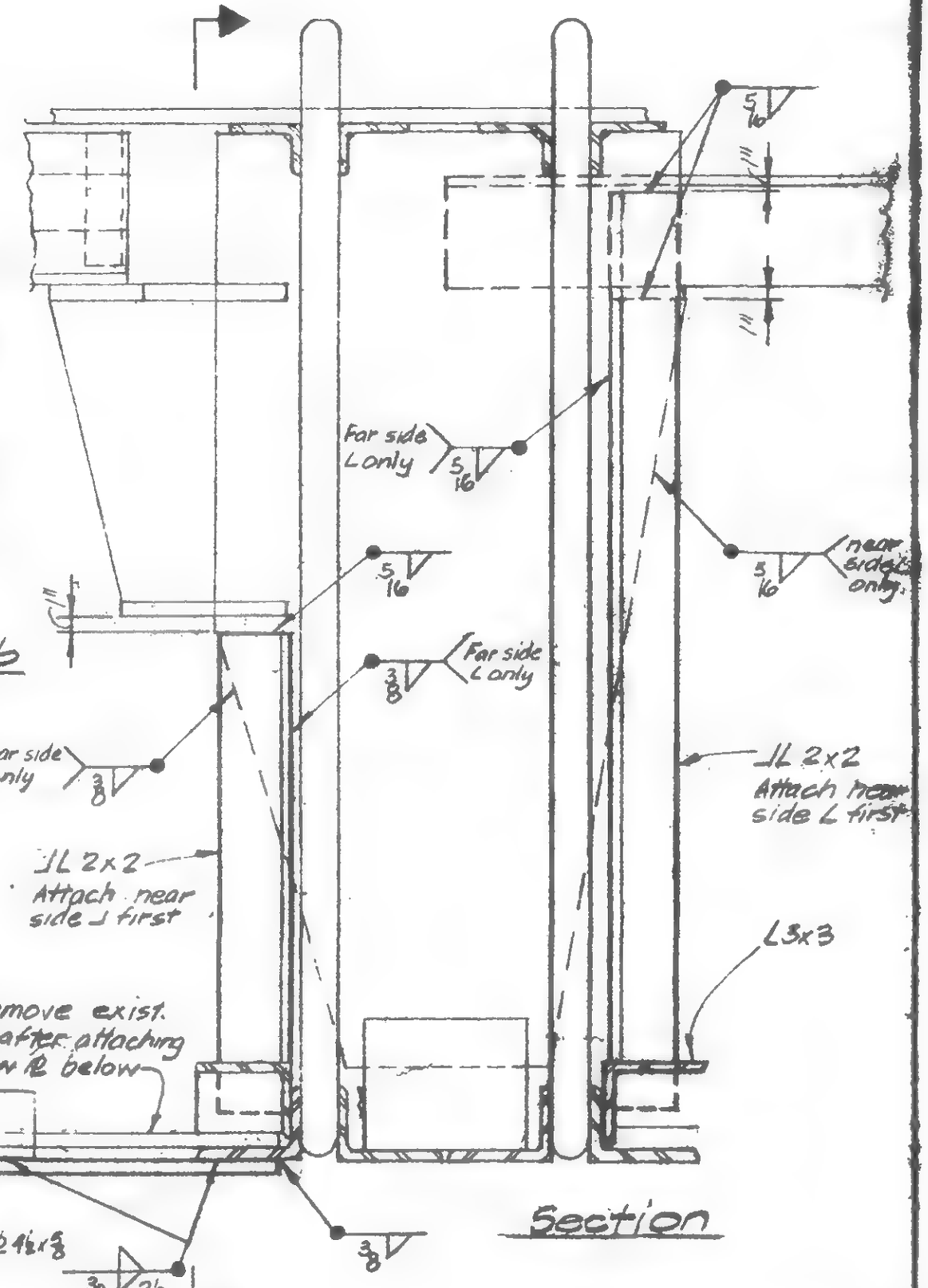

DETAIL 990E

19-A-990.3

LICENSED PROFESSIONAL ENGINEER LESLIE E. ROBERTSON NO. 34360 COMMONWEALTH OF THE STATE OF NEW YORK

SIGNED

DRAWN

REVIEWED WEB

SKILLING, HELLE, CHRISTIANSEN, ROBERTSON — Structural & Civil Engineers

PROJECT: THE WORLD TRADE CENTER | TITLE: LOUVER SUPPORT REPAIRS - FL. 108 | DATE: 2/5/71

REVISIONS

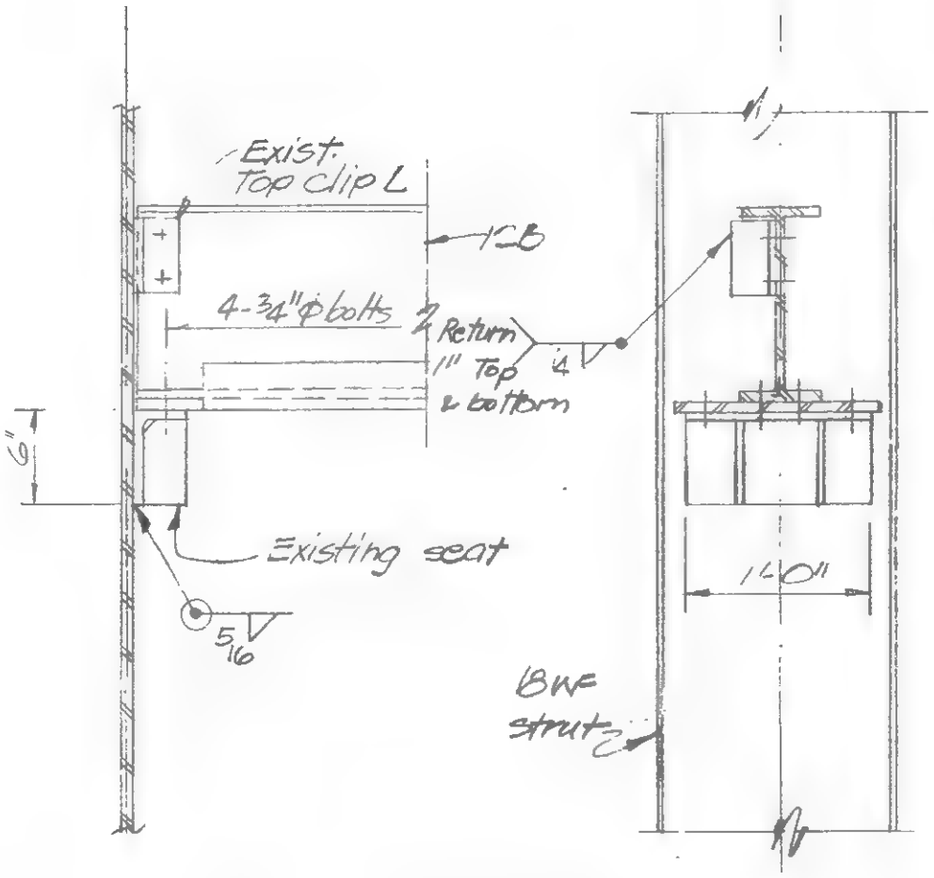

Remove existing connection material, relocate beam and reweld existing connection material to 18WF strut.

Detail 991A

See 9-AB9-1, 9-AB9-2.1, 9-AB9-3, 9-AB9-4.1 for location. Typical Detail 991A thru 991E

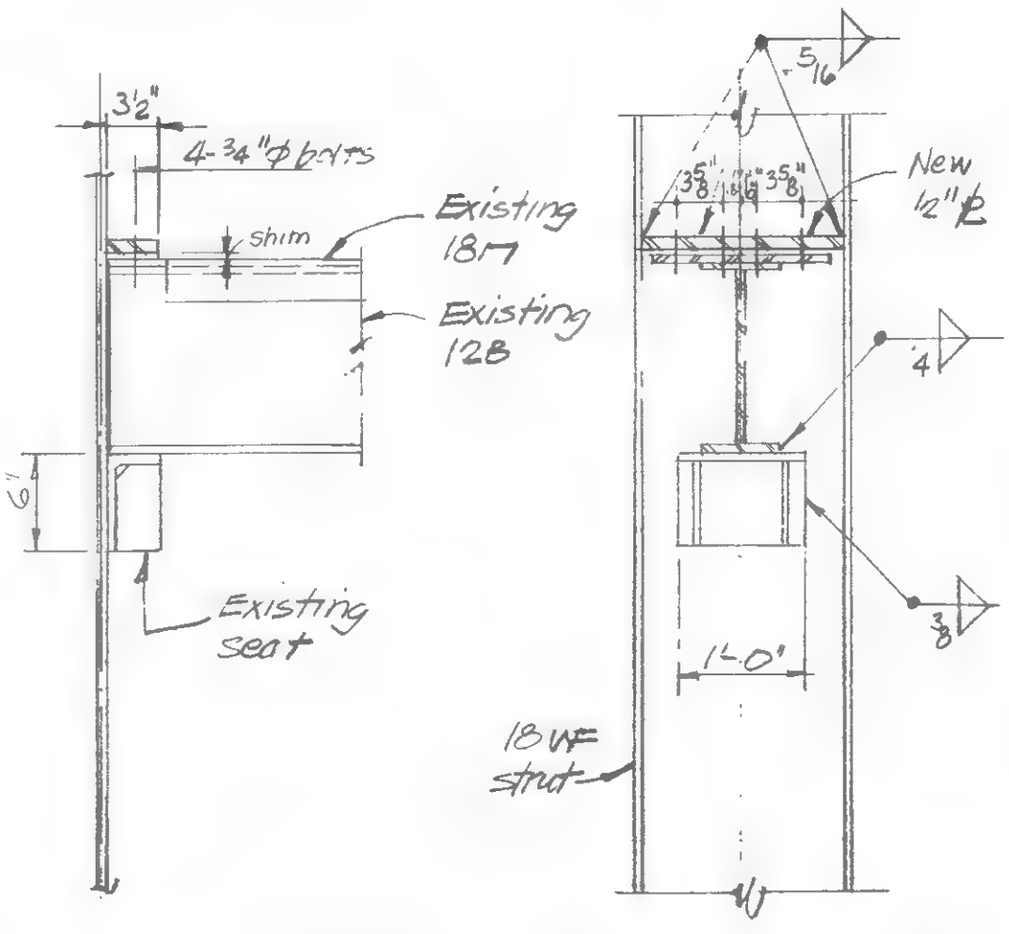

Remove existing connection material, rotate channel beam, assemble to position indicated in elevation, reweld existing connection material to 18WF strut and install new material as indicated.

Detail 991B

LICENSED PROFESSIONAL ENGINEER — LESLIE E. ROBERTSON — No. 34360 — UNIVERSITY OF THE STATE OF NEW YORK

DESIGNED WAB

DRAWN RO'Reilly

REVIEWED

19-A-991.1

SKILLING, HELLE, CHRISTIANSEN, ROBERTSON — Structural & Civil Engineers

PROJECT THE WORLD TRADE CENTER | TITLE LOUVER SUPPORT REPAIRS - FLOOR | DATE 2/5/71

REVISIONS

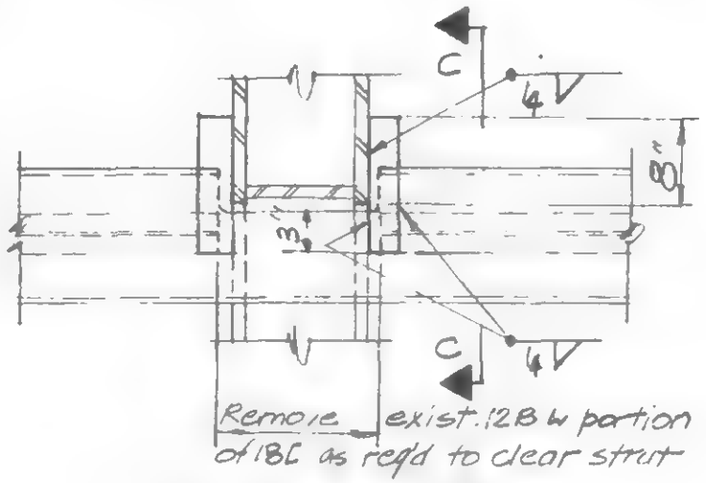

Plan Detail 991C

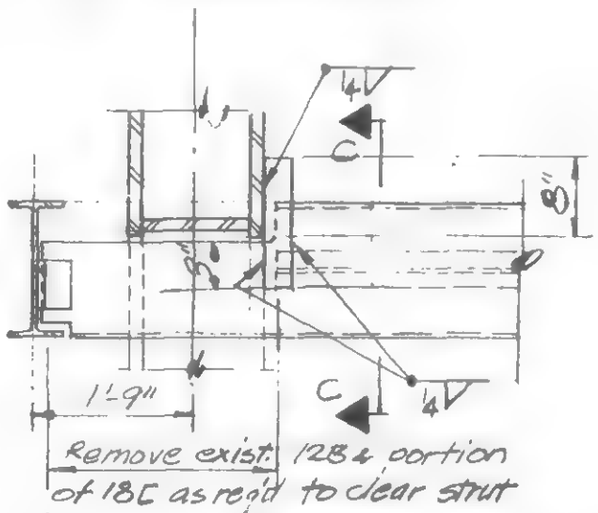

Plan Detail 991D

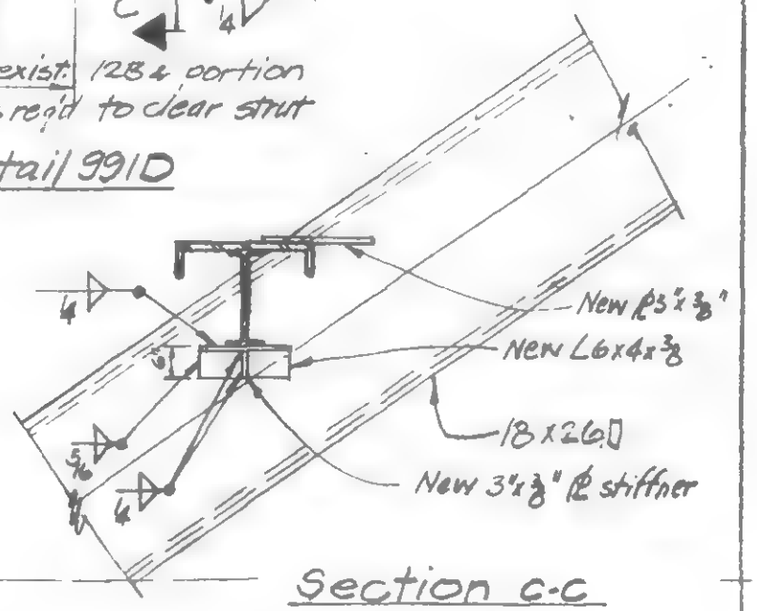

Section C-C

Detail 991C & D

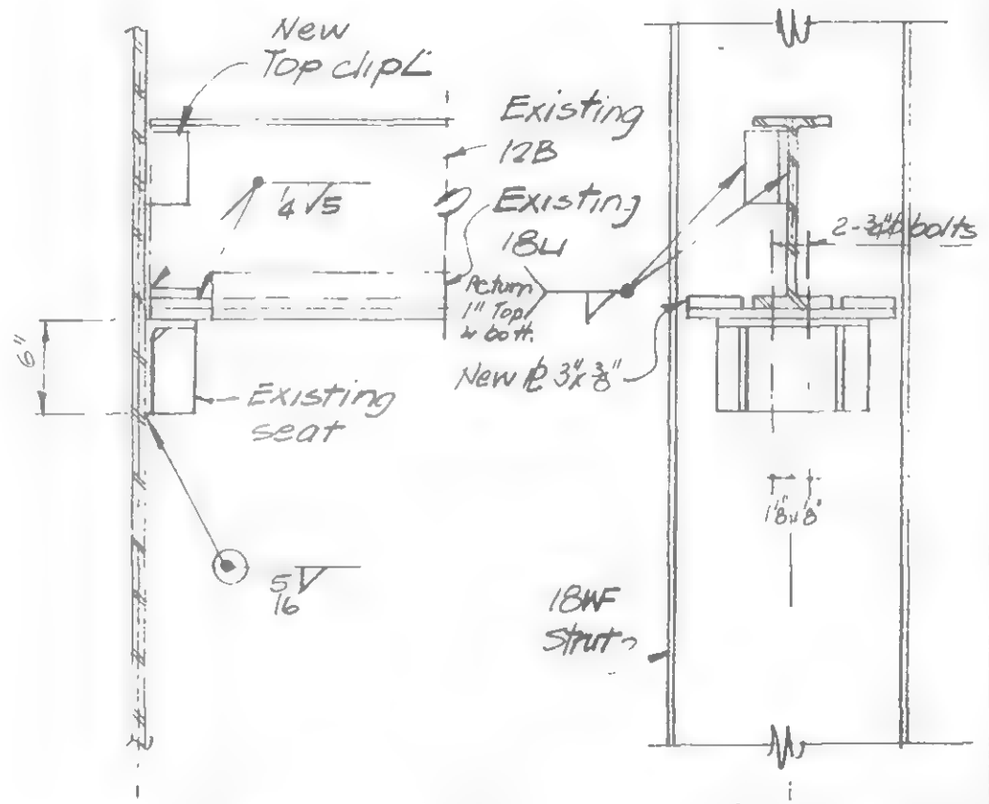

Remove existing connection material, relocate and reweld, rotate existing channel beam assembly and reinstall.

Detail 991E

LICENSED PROFESSIONAL ENGINEER — LESLIE E. ROBERTSON — No. 34360 — UNIVERSITY OF THE STATE OF NEW YORK

DESIGNED

DRAWN P.Orelli

REVIEWED

19-A-991.2

SKILLING, HELLE, CHRISTIANSEN, ROBERTSON — Structural & Civil Engineers

PROJECT THE WORLD TRADE CENTER | TITLE BEAM SEAT REPAIR TOWER B FLOOR 107 | DATE 3-15-71

REVISIONS

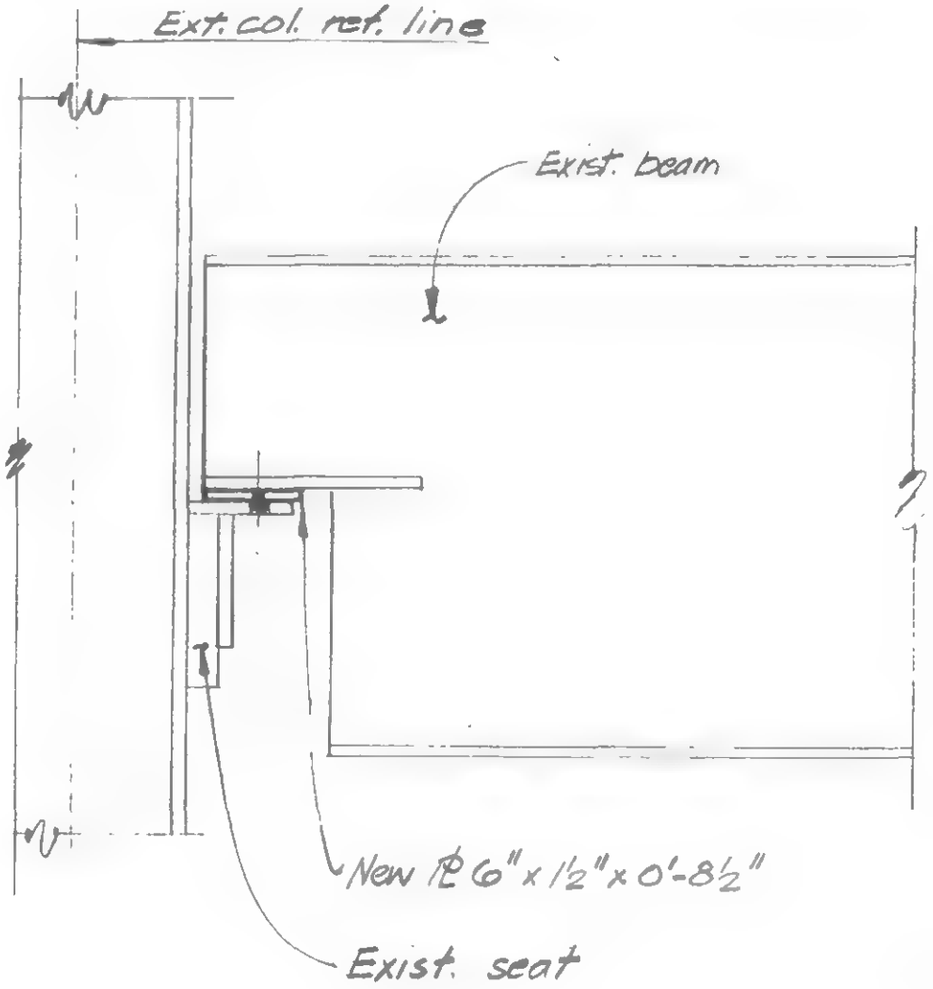

Detail 992A & 992B
See SB-115 for location.

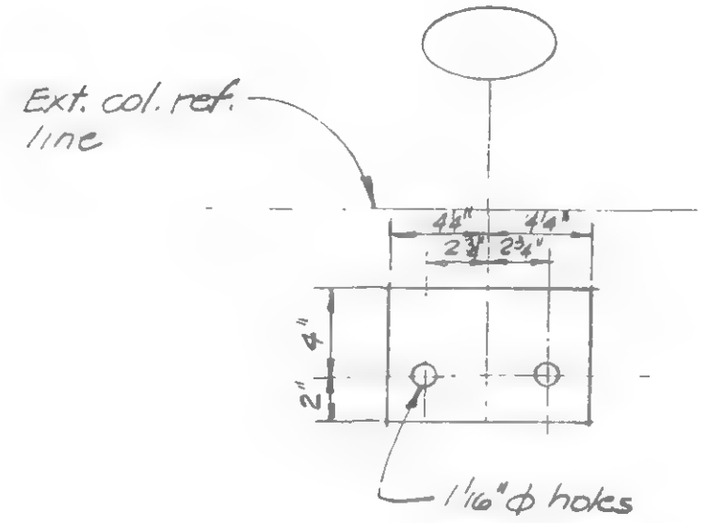

Plan of ℄

LICENSED PROFESSIONAL ENGINEER
LESLIE E. ROBERTSON
No. 34360
UNIVERSITY OF THE STATE OF NEW YORK

DESIGNED WAB
DRAWN P. Ozeler
REVIEWED

19-B-992

SKILLING, HELLE, CHRISTIANSEN, ROBERTSON — Structural & Civil Engineers

PROJECT THE WORLD TRADE CENTER | TITLE ~~BEAM SEAT~~ REPAIR - TOWER B FLOOR 107 | DATE 3-15-71

REVISIONS

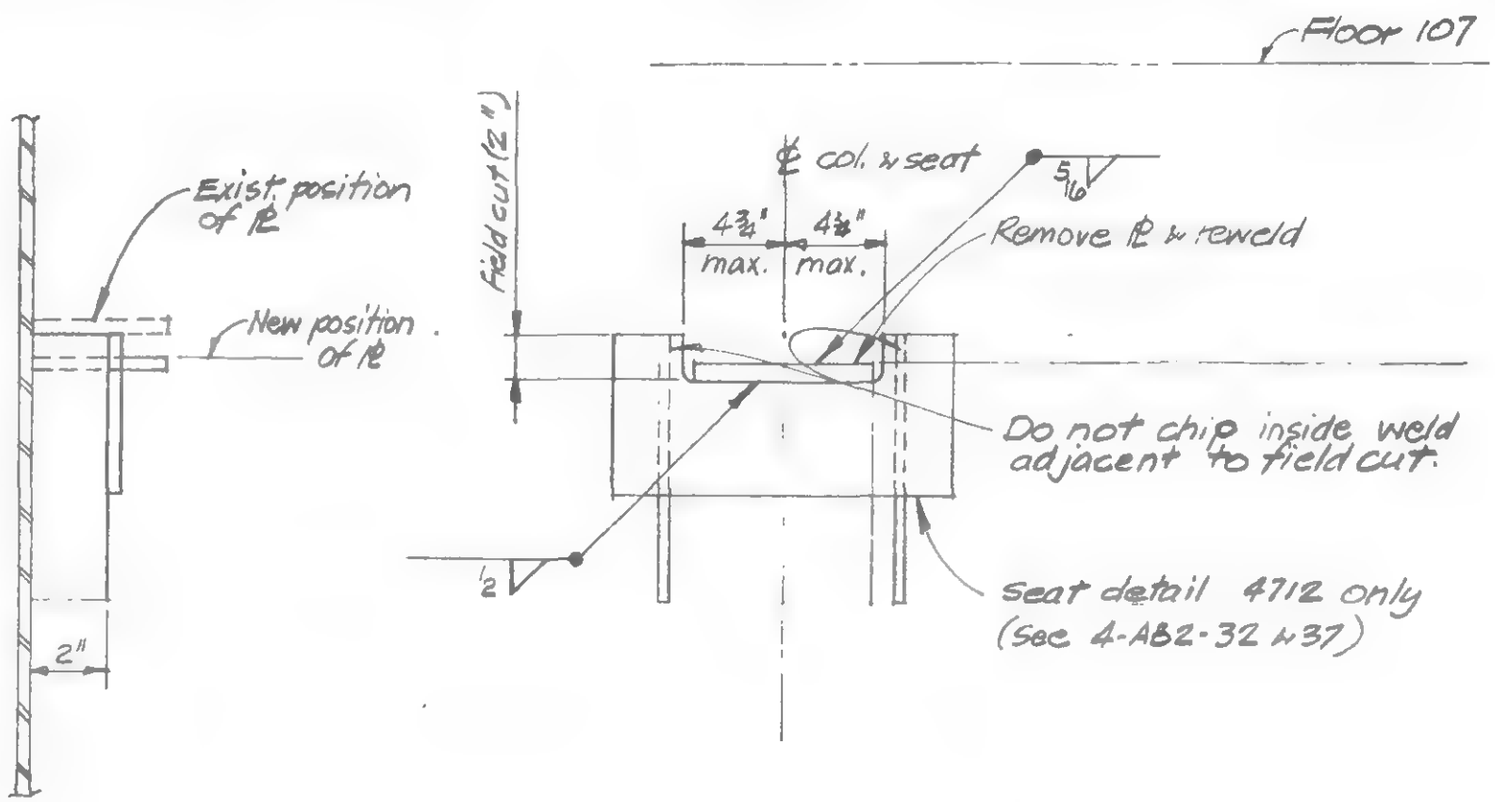

Detail 993-A

See SB-115 for location

LICENSED PROFESSIONAL ENGINEER — LESLIE E. ROBERTSON — No. 34360 — UNIVERSITY OF THE STATE OF NEW YORK

DESIGNED WAB

DRAWN ROcchi

REVIEWED

19-B-993

SKILLING, HELLE, CHRISTIANSEN, ROBERTSON — Structural & Civil Engineers

PROJECT: THE WORLD TRADE CENTER

TITLE: COLUMN SPLICE REPAIR - FLOOR 108 TOWER B

DATE: 3-15-71

REVISIONS

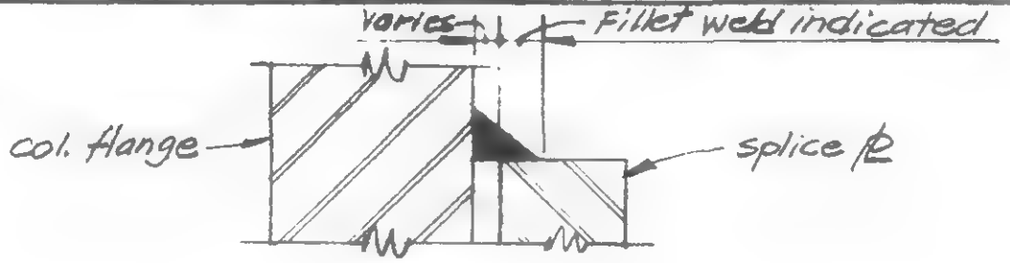

Detail A

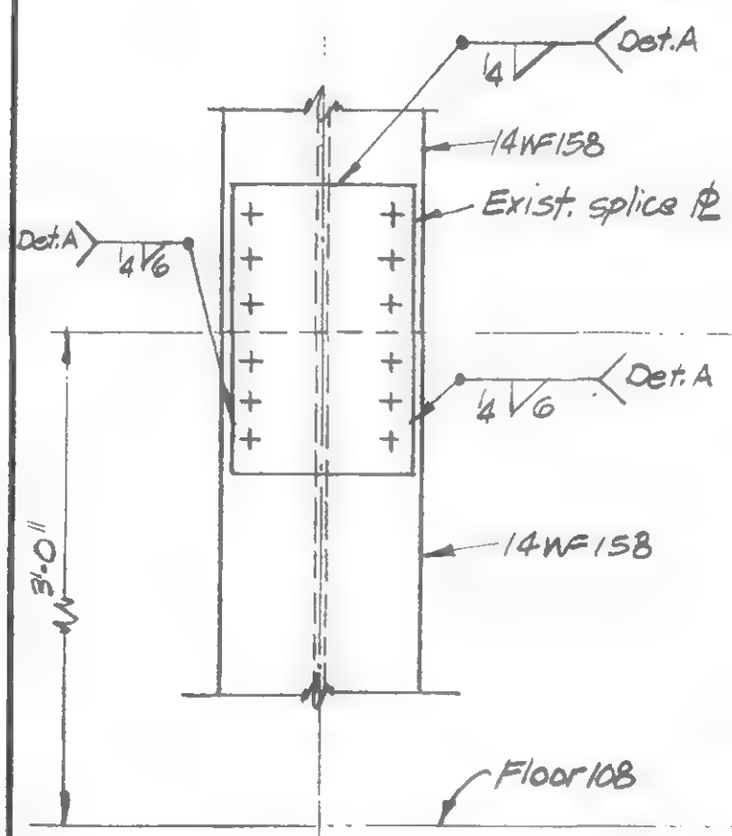

Detail 994A

Cols. 502, 503, 506, 507
1002, 1003, 1006, 1007

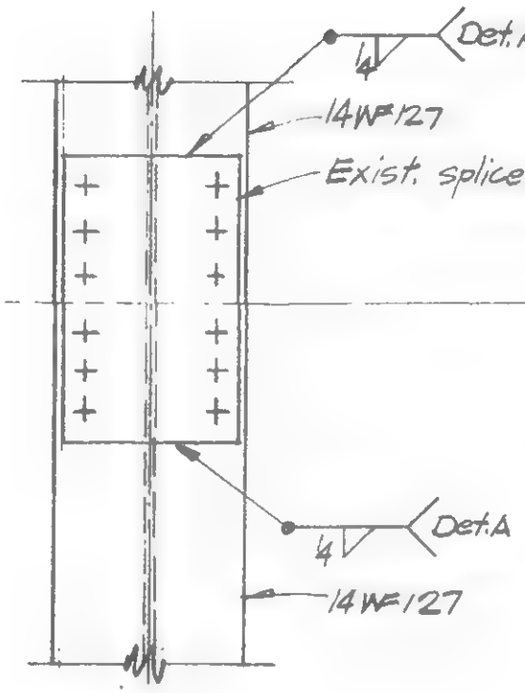

Detail 994B

Cols. 601, 608
901, 908

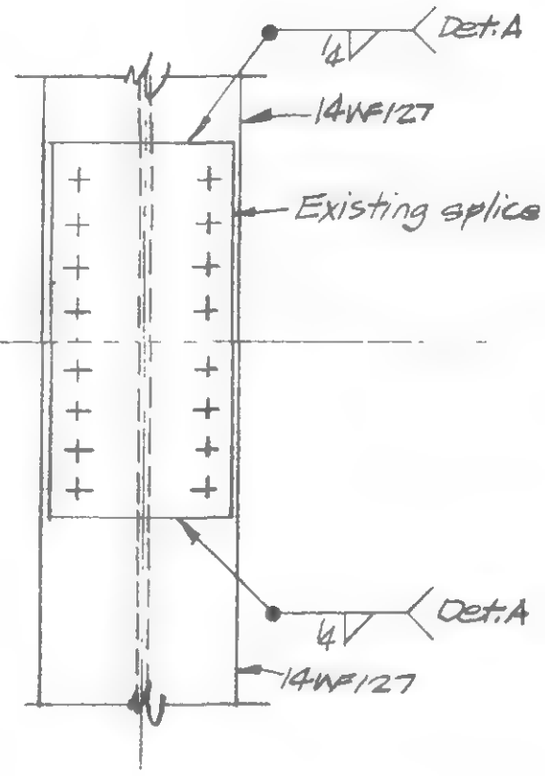

Detail 994C

Cols. 602, 603, 606, 607
902, 903, 906, 907

Note: 1. All bolts must be torqued prior to weld being installed.
2. Welding shall be accomplished using E70xx electrodes.
3. See SB-401 & SB-402 for location.

LICENSED PROFESSIONAL ENGINEER — LESLIE E. ROBERTSON — No. 34360 — UNIVERSITY OF THE STATE OF NEW YORK

DESIGNED: WAB

DRAWN: pozli

REVIEWED:

19-B-994

SKILLING, HELLE, CHRISTIANSEN, ROBERTSON — Structural & Civil Engineers

PROJECT THE WORLD TRADE CENTER | TITLE FIELD REPAIR EL 310 SPANDREL TOWER 'A' | DATE 3-12-71

REVISIONS

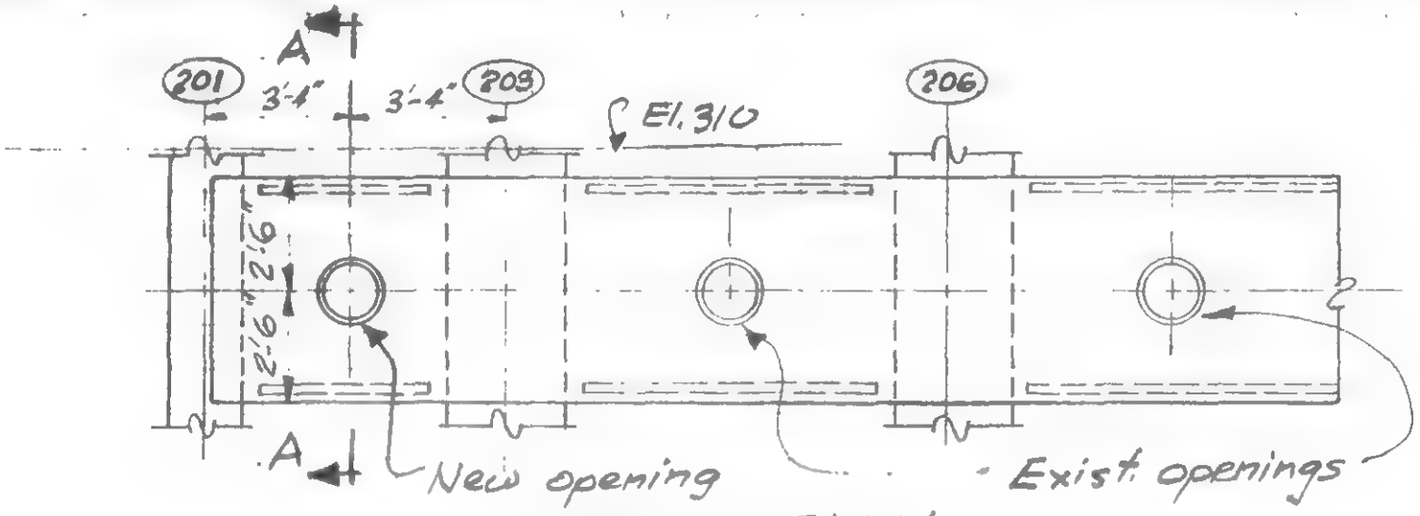

ELEVATION

Note 1
Cut bevel in existing spandrel ℄'s with air-arc gouge. Increase fillet weld size by 1/16 inch for each 1/8 inch of clearance between spandrel ℄ and pipe in excess of the first 1/16 inch of clearance.

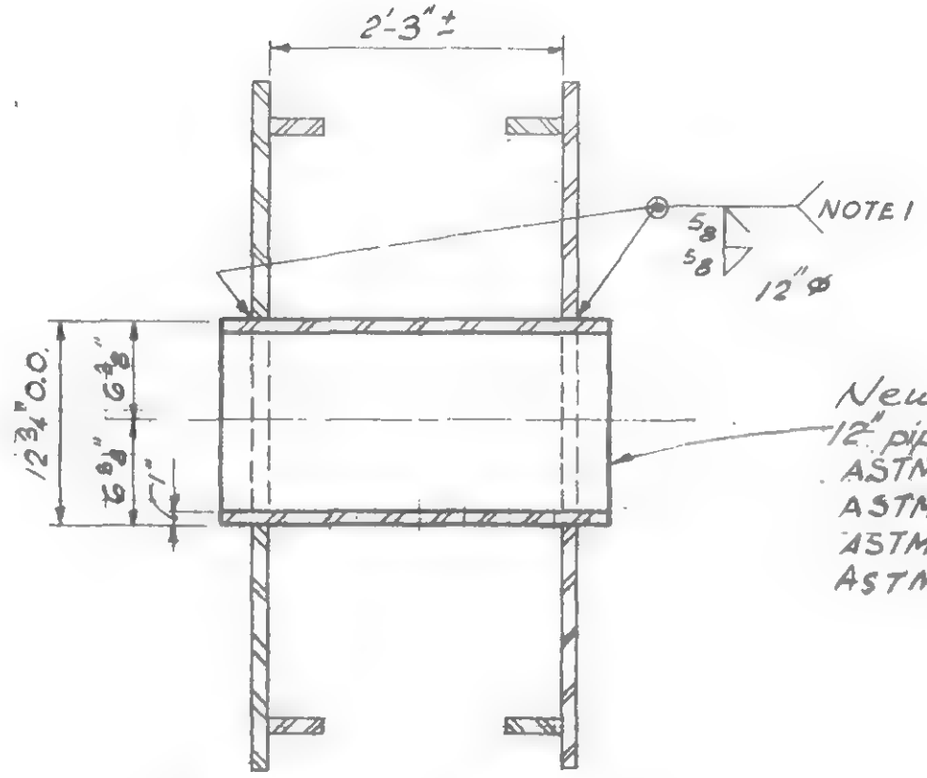

New
12" pipe xx strong x 2'-9" long
ASTM A53 Grade B
ASTM A500 Grade B } Contractors option
ASTM A501
ASTM A36

SECTION A-A

LICENSED PROFESSIONAL ENGINEER — LESLIE E. ROBERTSON — NO. 34560 — UNIVERSITY OF THE STATE OF NEW YORK

DESIGNED

DRAWN
T. Robertson

REVIEWED

19-A-995

SKILLING, HELLE, CHRISTIANSEN, ROBERTSON — Structural & Civil Engineers

PROJECT THE WORLD TRADE CENTER | TITLE TRUSS BOTTOM CHORD TO BEAM CONN. | DATE 4-15-71

REVISIONS

SCHEDULE OF DETAIL LOCATION AND TYPE

TOWER	FLOOR	Exterior column number opposite detail location																			
		101	103	105	107	109	151	153	155	157	159	359	357	355	353	351	309	307	305	303	301
TOWER A	44	NR	3	NR	3	3	3	3	NR	3	NR	NR	3	NR	3	3	3	3	NR	3	NR
	45						3	3	NR	3	NR	NR	3	NR	3	3	3	3	NR	3	NR
	46											NR	3	NR	3	3	3	3	NR	3	NR
	47											NR	3	NR	3	NR	NR	3	NR	3	NR
	48											NR	3	NR	3	NR	NR	3	NR	3	NR
	49											NR	3	NR	3	3	3	3	NR	3	NR
	78	NR	3	NR	3	3	3	3	NR	3	NR	NR	3	NR	3	3	3	3	NR	3	NR
	79	NR	3	NR	3	3	3	3	NR	3	NR						3	3	NR	3	NR
	80	NR	3	NR	3	3	3	3	NR	3	NR										
	81	NR	3	NR	3	NR	NR	3	NR	3	NR										
	82	NR	3	NR	3	3	3	3	/	/	NR										
	83	NR	/	/	/	/	/	/	/	/	NR										
TOWER B	44	NR	3	NR	3	3	3	3	NR	3	NR	NR	3	NR	3	3	3	3	NR	3	NR
	45						3	3	NR	3	NR	NR	3	NR	3	3	3	3	NR	3	NR
	46											NR	3	NR	3	3	3	3	NR	3	NR
	47											NR	3	NR	3	NR	NR	3	NR	3	NR
	48											NR	3	NR	3	NR	NR	3	NR	3	NR
	49											NR	3	NR	3	3	3	3	NR	3	NR
	78	NR	2	NR	2	2	2	2	NR	2	NR	NR	2	NR	2	2	2	2	NR	2	NR
	79	NR	2	NR	2	2	2	2	NR	2	NR						2	2	NR	2	NR
	80	NR	2	NR	2	2	2	2	NR	2	NR										
	81	NR	2	NR	2	NR	NR	2	NR	2	NR										
	82	NR	2	NR	2	2	2	2	NR	2	NR										
	83	NR	2	NR	2	2	2	2	NR	2	NR										

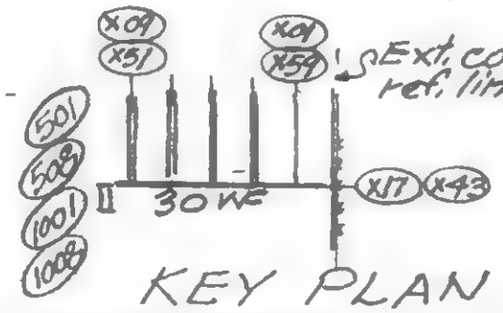

KEY PLAN

Notes:
1. Detail 1 is existing in locations indicated
2. For Detail 2 & 3 see 19-AB-996.2
3. NR indicates detail not required
4. / indicates detail not applicable

LICENSED PROFESSIONAL ENGINEER — LESLIE E. ROBERTSON — No. 34980 — UNIVERSITY OF THE STATE OF NEW YORK

DESIGNED JTM, WAB

DRAWN

REVIEWED WAB

19-AB-996.1

SKILLING, HELLE, CHRISTIANSEN, ROBERTSON — Structural & Civil Engineers

PROJECT: THE WORLD TRADE CENTER | TITLE: TRUSS BOTTOM CHORD TO BEAM CONN. | DATE: 4-15-71

REVISIONS

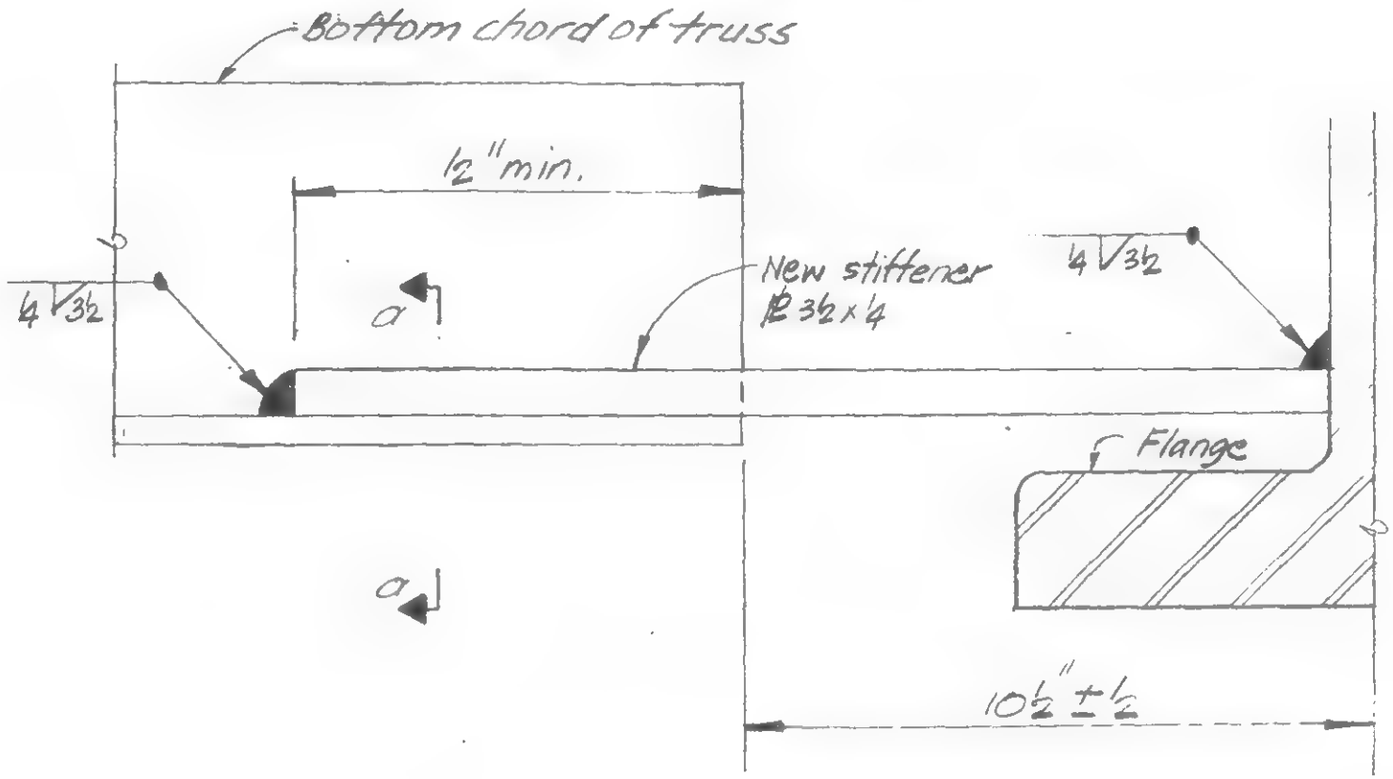

Elevation

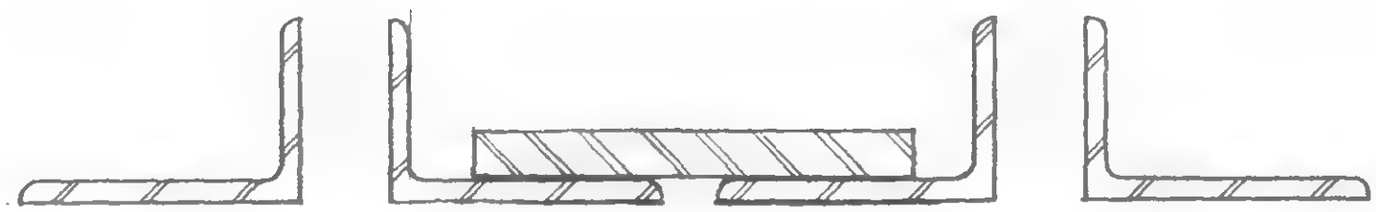

Section a-a

PROCEDURE

Detail 2 -
1. Straighten web of beam to vertical position.
2. Weld stiffener plate to web.
3. Hold beam in position.
4. Weld stiffener plate to bottom chord of truss.

Detail 3 -
1. Weld stiffener plate to web.
2. Weld stiffener plate to bottom chord of truss.

Details 2 and 3

LICENSED PROFESSIONAL ENGINEER — LESLIE E. ROBERTSON — No. 34980 — UNIVERSITY OF THE STATE OF NEW YORK

DESIGNED: LEL, JTM
DRAWN: JA
REVIEWED: LEL

19-AB-996.2

SKILLING, HELLE, CHRISTIANSEN, ROBERTSON — Structural & Civil Engineers

PROJECT THE WORLD TRADE CENTER | TITLE NEW PLANK WALL SUPPORT – INTERMEDIATE LEVEL | DATE 6/8/71

REVISIONS

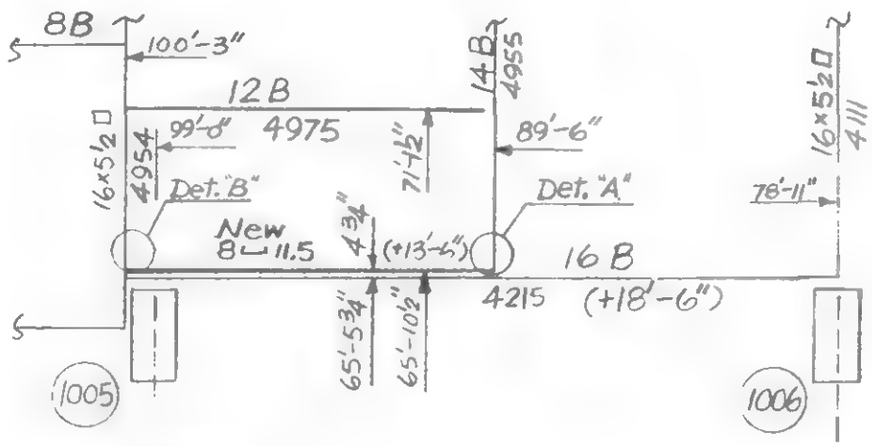

Note:
All framing at 14'-0" from reference floor line, El. 310'-0", except as noted.

Part of framing plan
Intermediate level

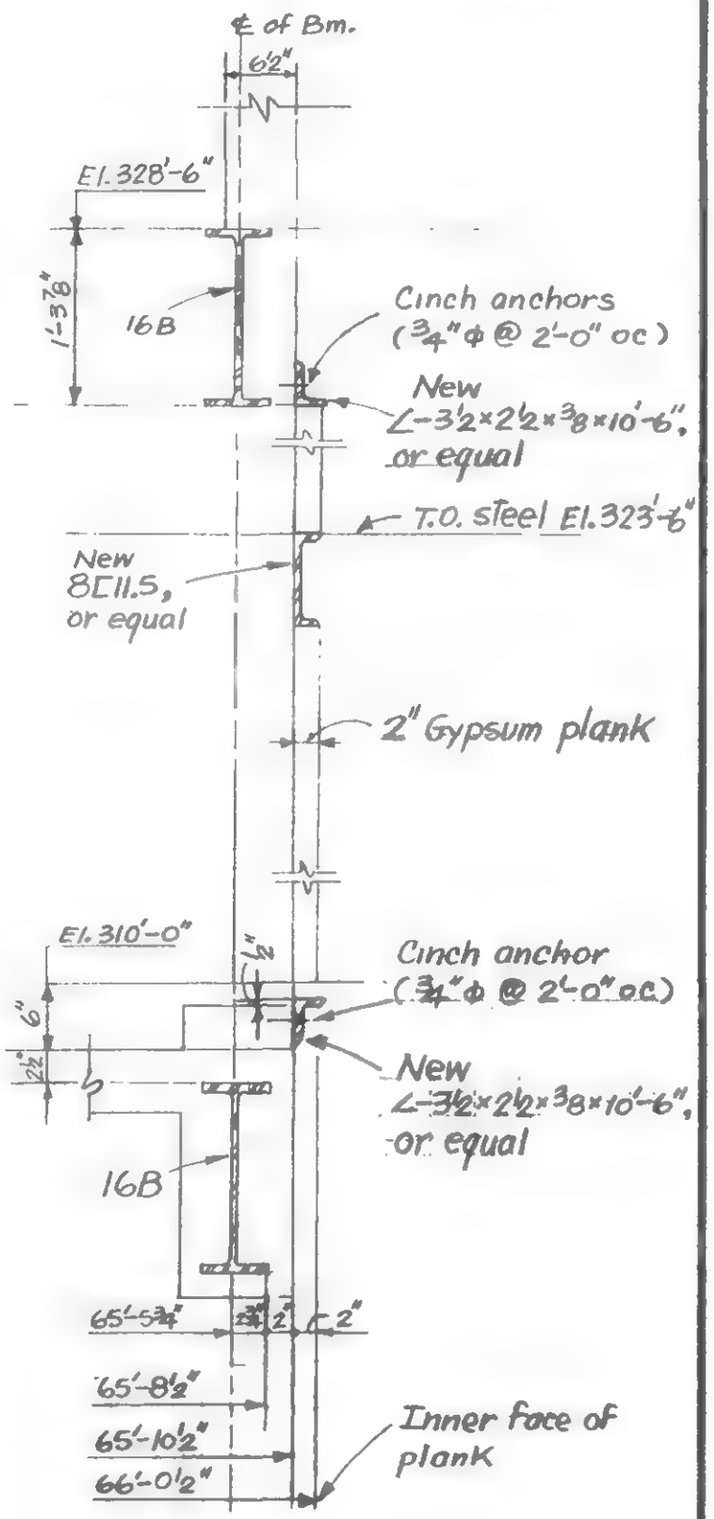

¾" = 1'-0"

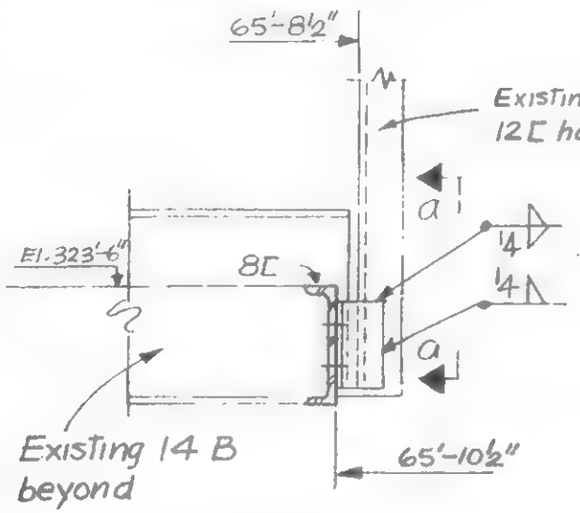

Detail "A"
1" = 1'-0"

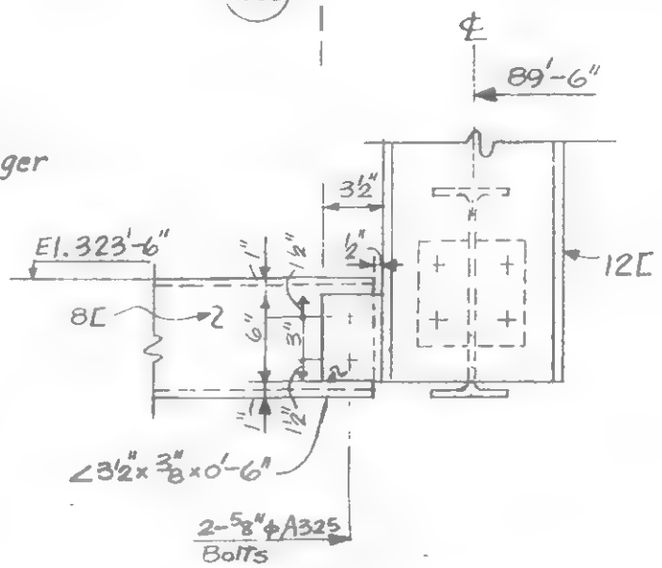

Section a-a
1" = 1'-0"

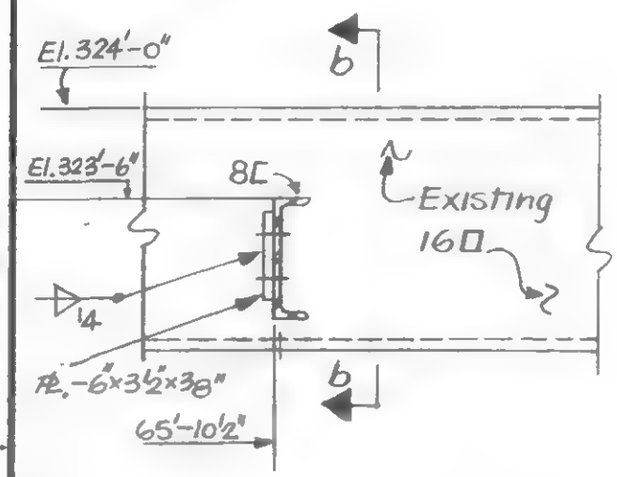

Detail "B"
1" = 1'-0"

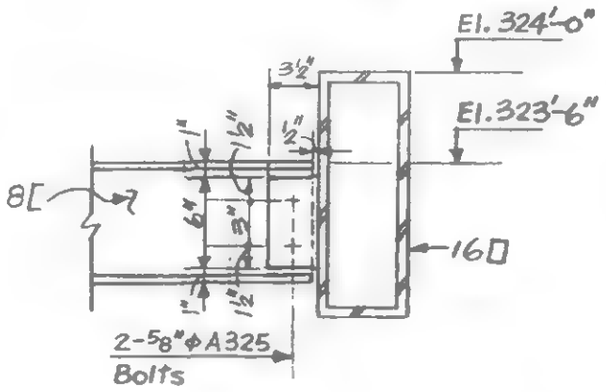

Section b-b
1" = 1'-0"

LICENSED PROFESSIONAL ENGINEER
LESLIE E. ROBERTSON
No. 34360
UNIVERSITY OF THE STATE OF NEW YORK

DESIGNED

DRAWN
D. Chew

REVIEWED

19-AB-998

SKILLING, HELLE, CHRISTIANSEN, ROBERTSON — Structural & Civil Engineers

PROJECT: THE WORLD TRADE CENTER | TITLE: FIELD INSTALLATION OF BEAMS AT WINDOW WASHER LIFT | DATE: 7/2/71

REVISIONS

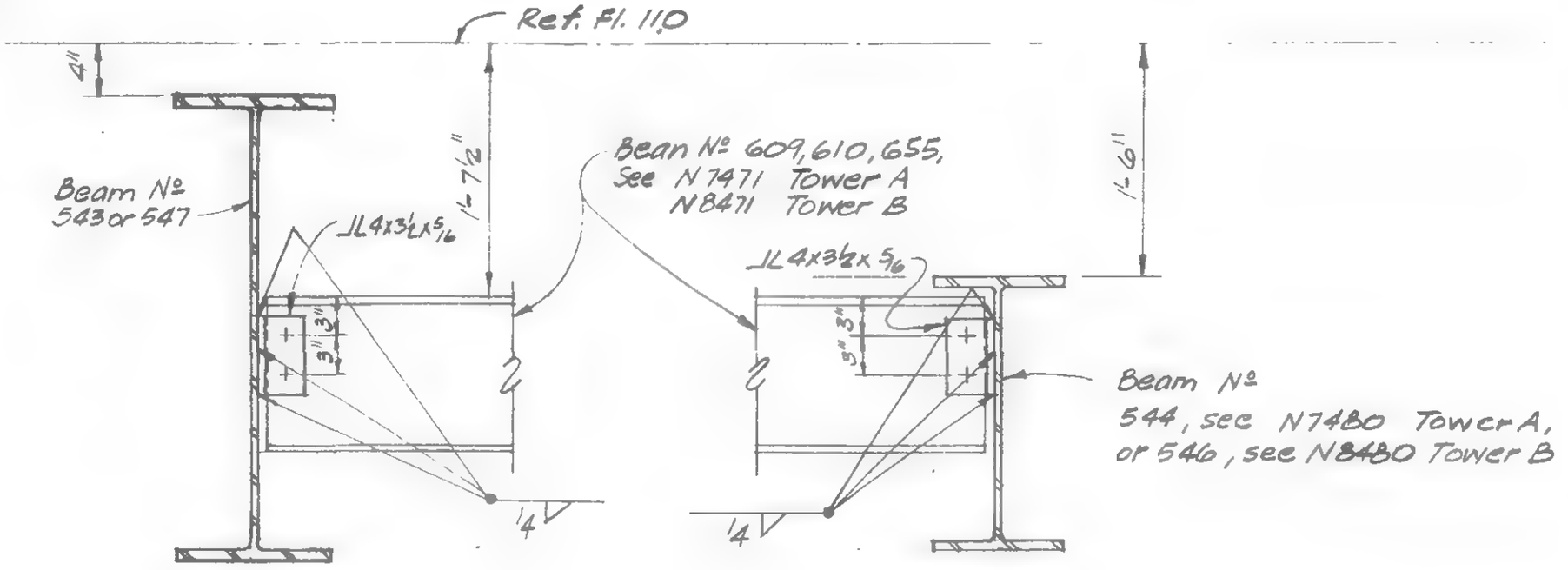

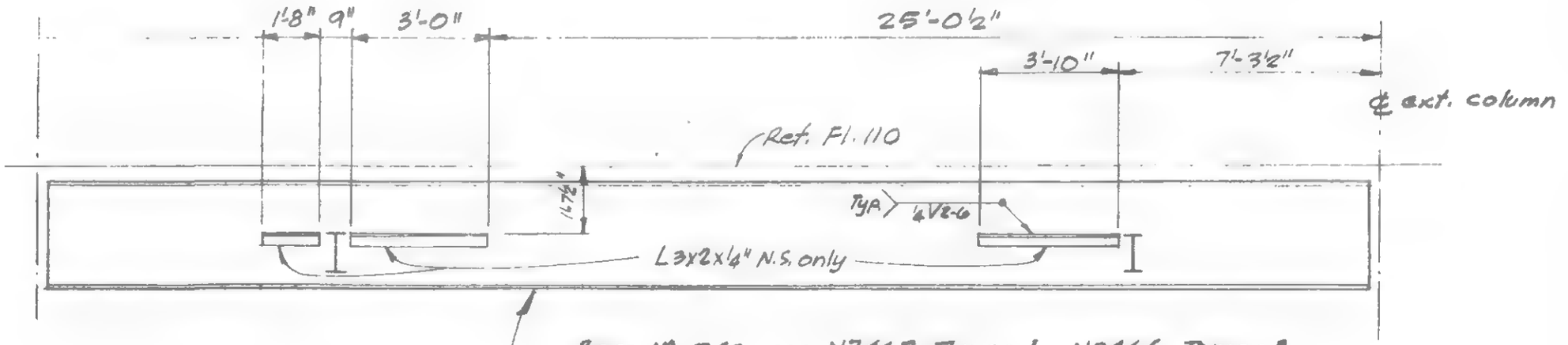

Beam No 543, see N7467 Tower A, N8466 Tower B.
or
Beam No 547, see N7466 Tower A, N8482 Tower B.

LICENSED PROFESSIONAL ENGINEER — LESLIE E. ROBERTSON — No. 34360 — UNIVERSITY OF THE STATE OF NEW YORK

DESIGNED

DRAWN P.M.O'Toole

REVIEWED

19-AB-999

SKILLING, HELLE, CHRISTIANSEN, ROBERTSON — Structural & Civil Engineers

PROJECT THE WORLD TRADE CENTER | TITLE PANEL 245 A12-9 | DATE 6-5-69

REVISIONS

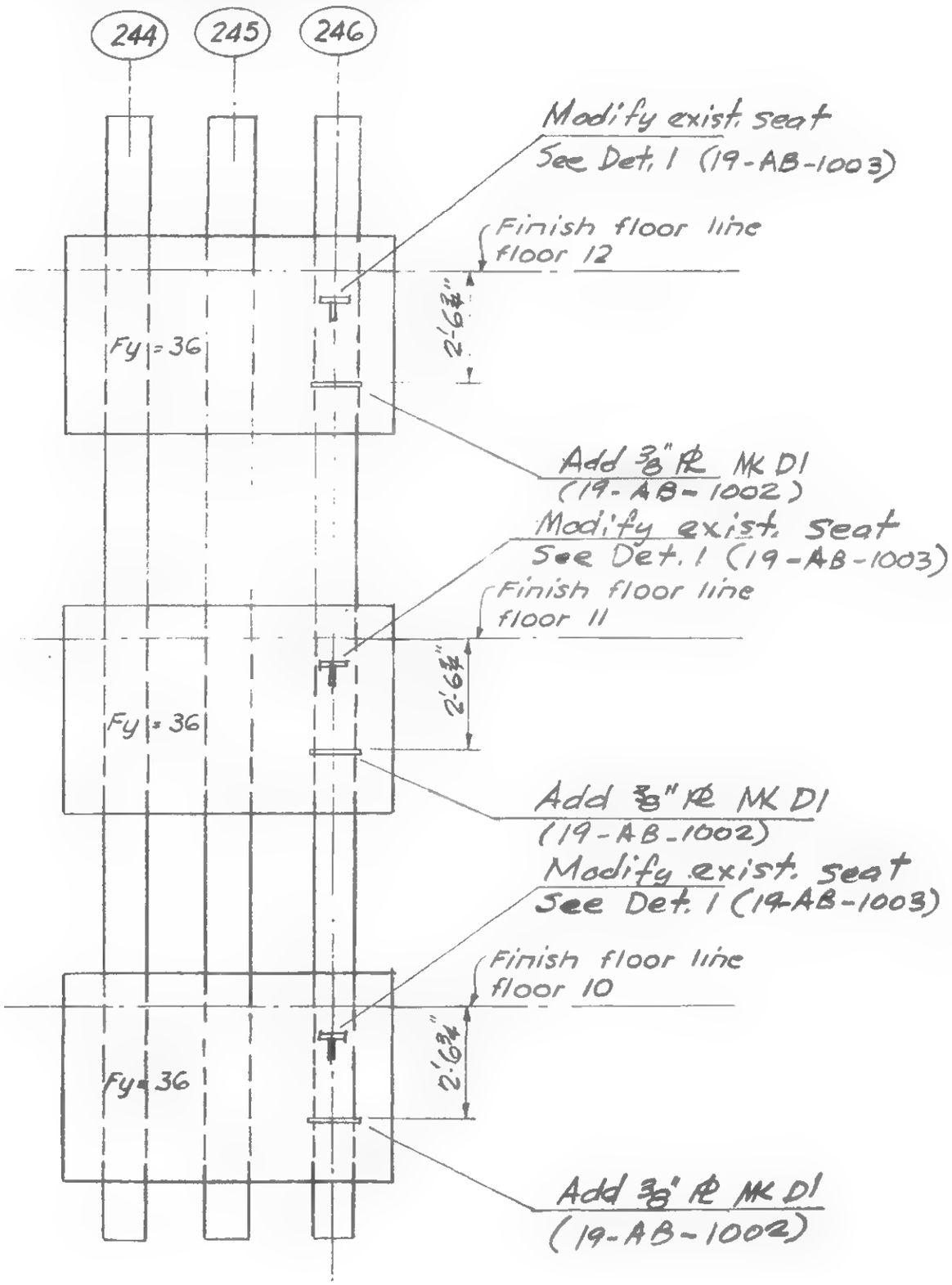

LICENSED PROFESSIONAL ENGINEER
LESLIE E. ROBERTSON
No. 34360
UNIVERSITY OF THE STATE OF NEW YORK

DESIGNED

DRAWN F. Smith

REVIEWED

19-A-1001

SKILLING, HELLE, CHRISTIANSEN, ROBERTSON — Structural & Civil Engineers

PROJECT THE WORLD TRADE CENTER | TITLE EXTERIOR WALL PANEL - SEAT DETAIL D | DATE 6-5-69

REVISIONS

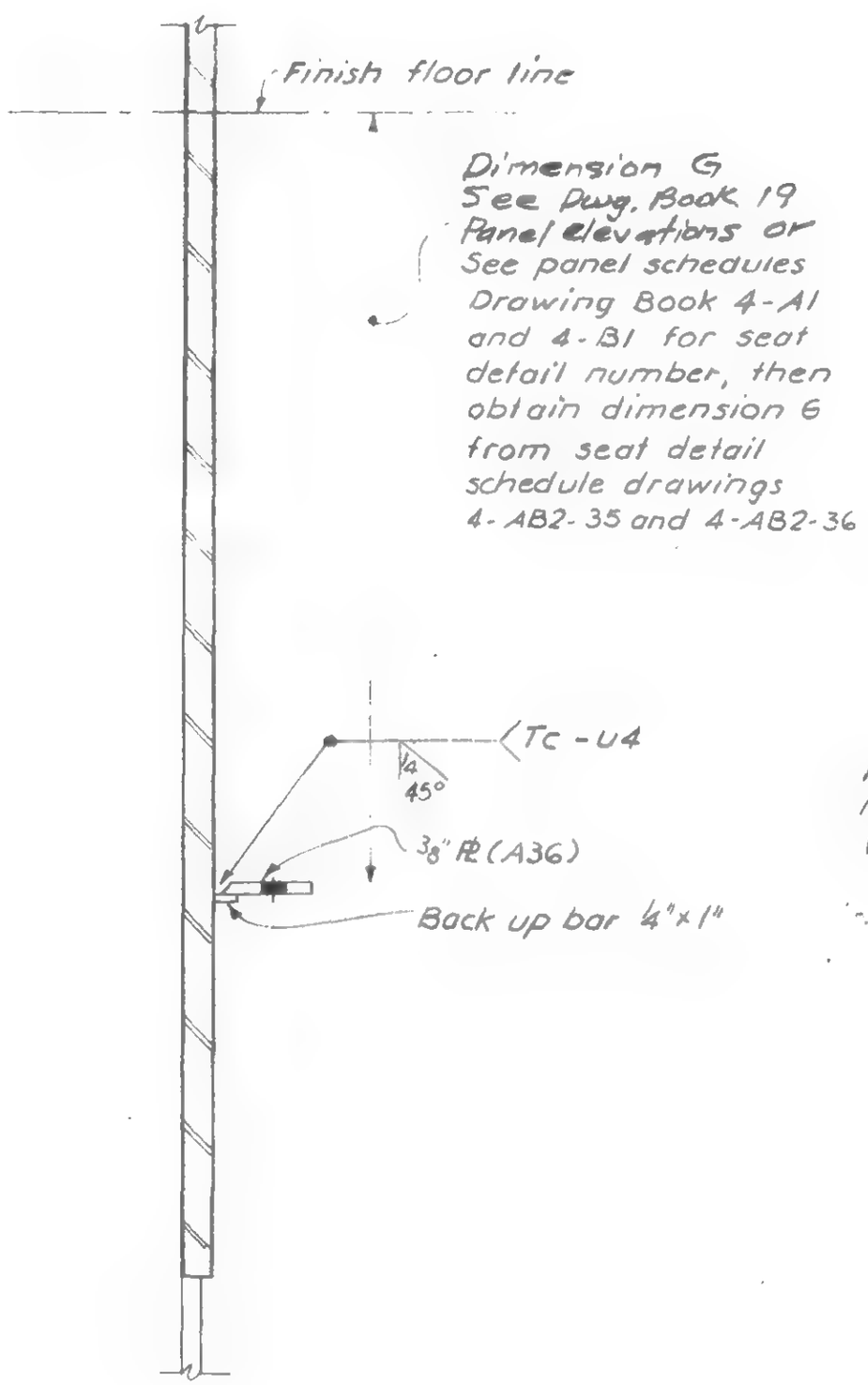

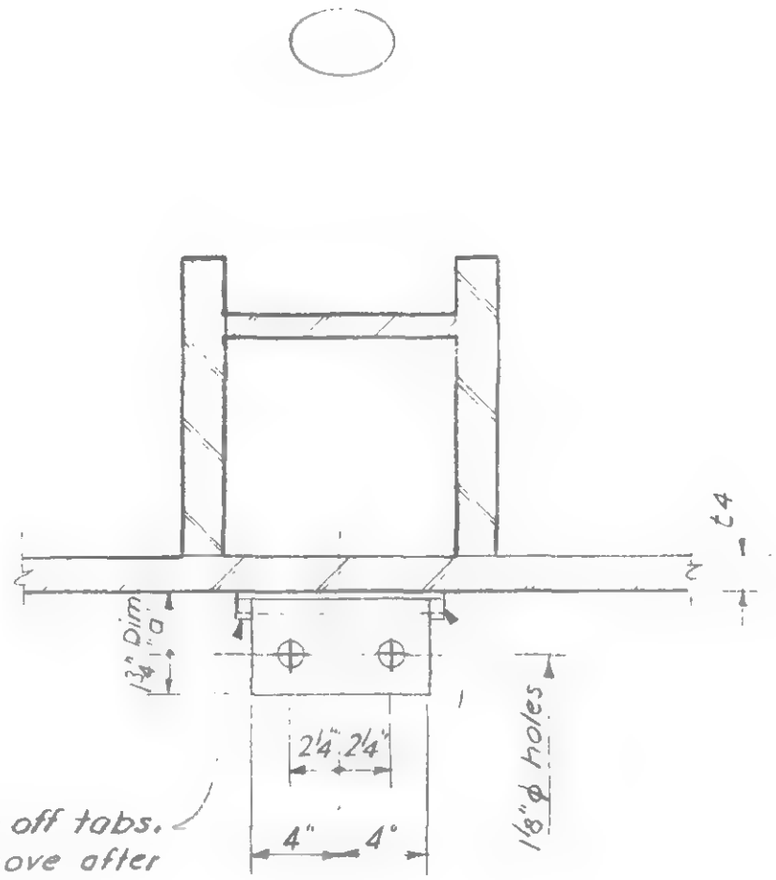

MK	DIM "a"	t4	FLOORS
D1	2 7/8"	1 3/8" - 1 1/8"	10 - 32
D2	3 1/8"	1 1/16" - 7/8"	33 - 48
D3	3 3/8"	13/16" - 5/8"	49 - 70
D4	3 5/8"	9/16" - 3/8"	71 - 107

LICENSED PROFESSIONAL ENGINEER LESLIE E. ROBERTSON No. 34260 UNIVERSITY OF THE STATE OF NEW YORK

DESIGNED

DRAWN F. Smith

REVIEWED

19-AB-1002

SKILLING, HELLE, CHRISTIANSEN, ROBERTSON — Structural & Civil Engineers

PROJECT THE WORLD TRADE CENTER | TITLE EXTERIOR WALL PANEL - SEAT DETAIL 1 | DATE 6-5-69

REVISIONS

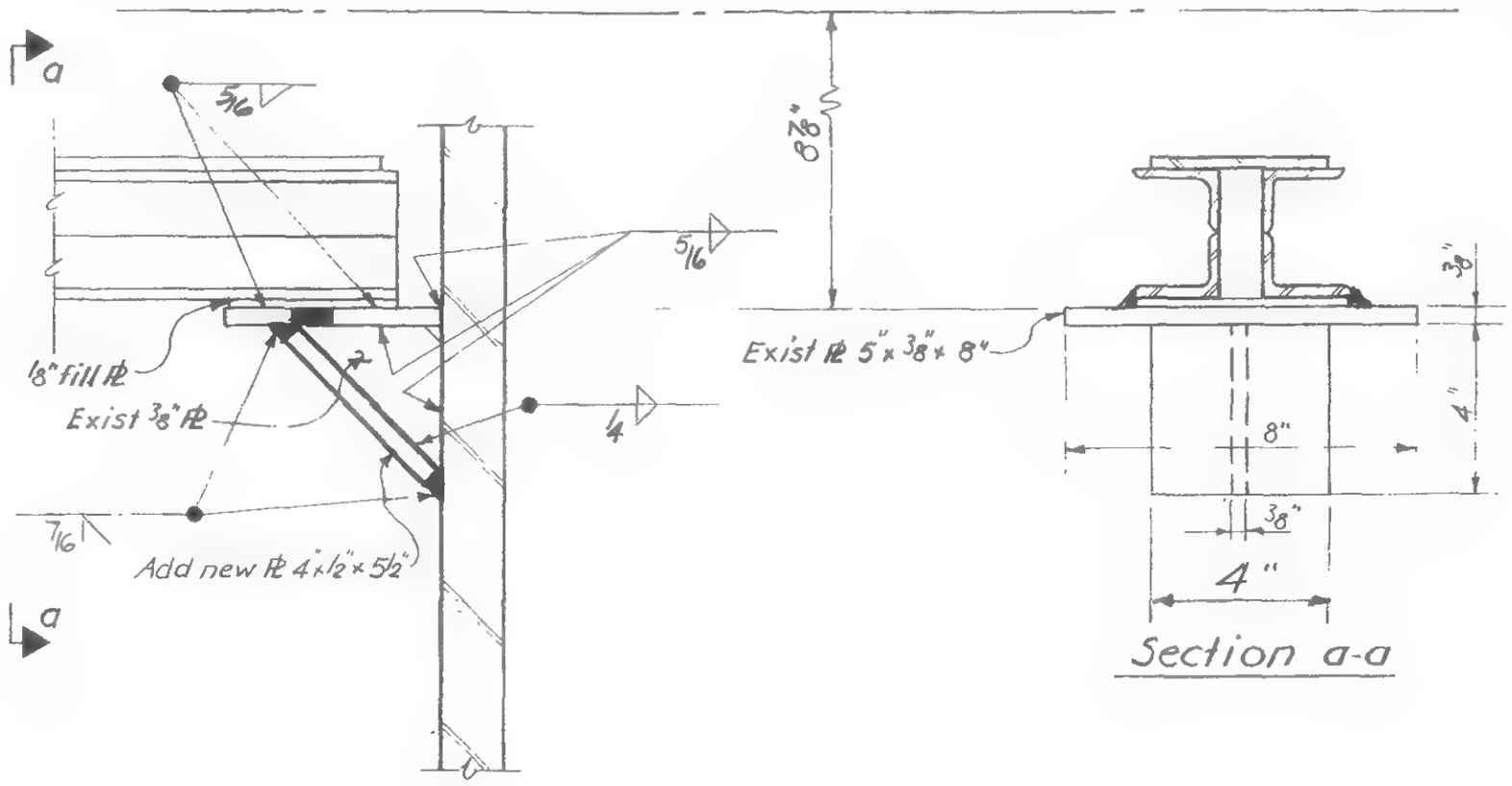

Section a-a

LICENSED PROFESSIONAL ENGINEER
LESLIE E. ROBERTSON
No. 34360
UNIVERSITY OF THE STATE OF NEW YORK

DESIGNED

DRAWN F. Smith

REVIEWED

19-AB-1003

SKILLING, HELLE, CHRISTIANSEN, ROBERTSON — Structural & Civil Engineers

PROJECT: THE WORLD TRADE CENTER | TITLE: EXTERIOR WALL - COLUMN SPLICE REPAIR PROCEDURE | DATE: 6-20-69

REVISIONS

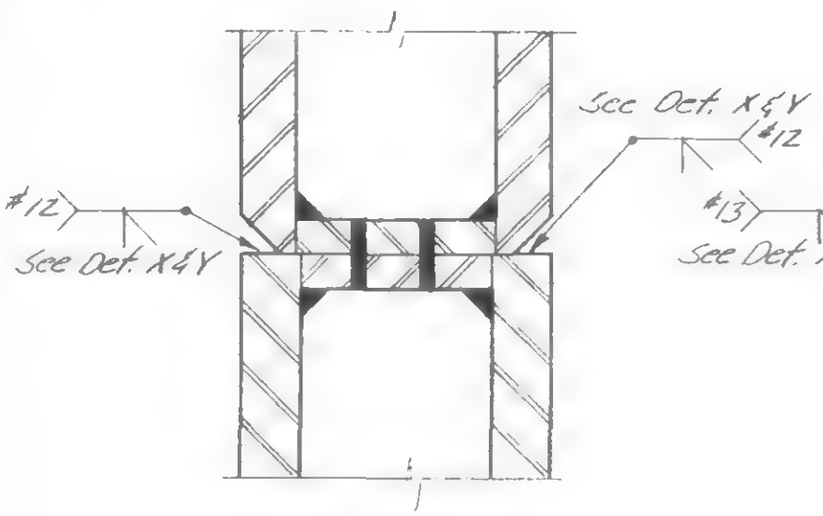

Section a-a

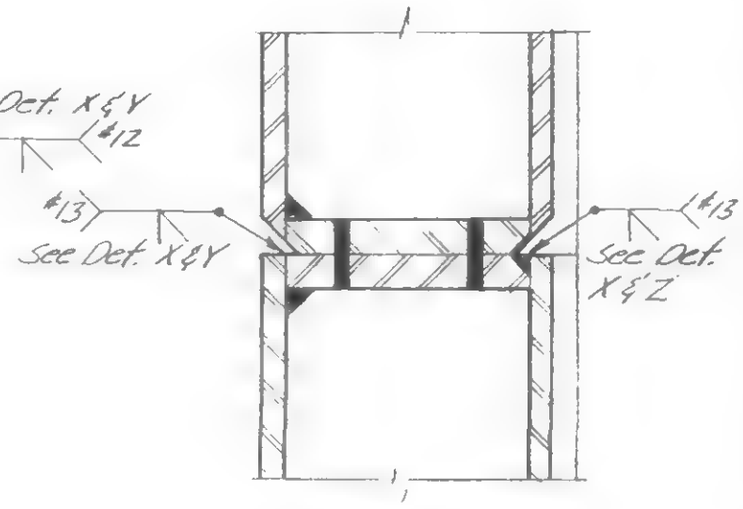

Section b-b

COLUMN TYPES	WELD SIZE	
	WELD 12	WELD 13
120 thru 122	1/2	1/2
123 thru 129	5/8	1/2
130 thru 134	3/4	1/2
135 thru 139	7/8	5/8
140 and 141	1	5/8
142 thru 145	1 1/8	5/8
146 thru 149	1 1/4	5/8
150 thru 155	1 5/8	5/8
156 thru 158	1 5/8	3/4
159 thru 164	1 3/4	3/4

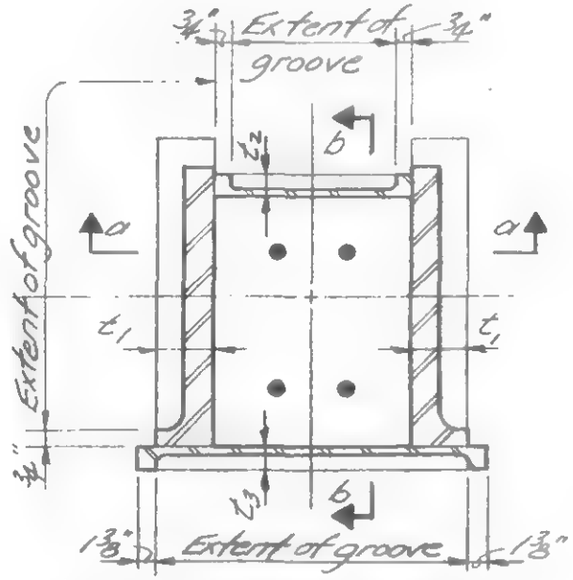

PLAN ABOVE SPLICE
Column Type 128-164

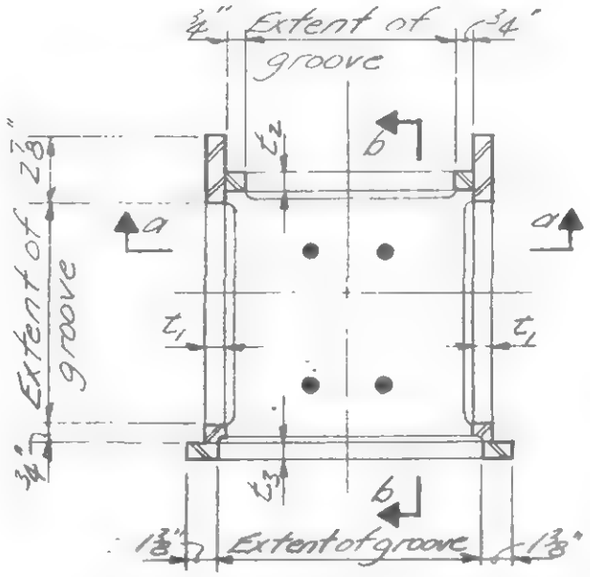

PLAN ABOVE SPLICE
Column Type 120-127

WELDING ELECTRODE TABLE			
Fy GREATER THAN	Fy EQUAL OR LESS THAN	ASTM SPEC	CLASS
	36	A233	E70XX
36	50	A233	E70XX
50	70	A316	E80XX
70	80	A316	E90XX
80	90	A316	E100XX
90		A316	E110XX

Low hydrogen electrodes shall be used.

NOTE: Column splices may be welded as shown if the bolt hole diameter or pattern preclude the use of specified splice bolts.

NOTES:

1. Weld size shall be determined by the upper column type at the splice.
2. Preparation for welds shall be accomplished by arcair gouging to dimensions shown in schedule.
3. For Detail X, Y, Z see 19-AB-1004.2
4. Erector to supply shims of 18 ga. stock, where required, to maintain full bearing. Shim material to be ASTM A245, Grade D. For plan of shim see 4-AB2-12.
5. Preheat shall be not less than AWS minimums and shall conform, wherever applicable, to steel manufacturer's recommendations
6. Welding electrodes shall be determined by the Fy of the upper column type at the splice. See welding electrode table.

DESIGNED H. I. GELLER
DRAWN J. Adams
REVIEWED W. Brewer

19-AB-1004.1

SKILLING - HELLE - CHRISTIANSEN - ROBERTSON Structural & Civil Engineers

PROJECT THE WORLD TRADE CENTER | TITLE EXTERIOR WALL - COLUMN SPLICE REPAIR PROCEDURE | DATE 6-20-69

REVISIONS

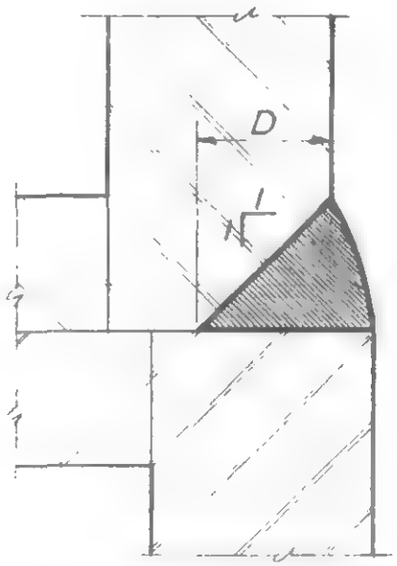

Case 1

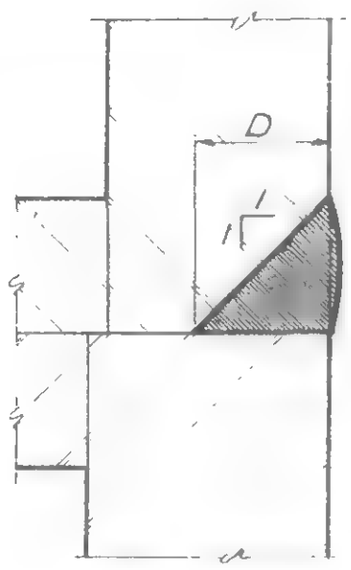

Case 2

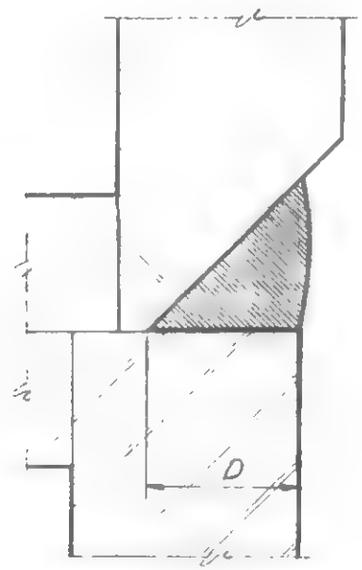

Case 3

D = Scheduled weld size for weld #12 or #13

DETAIL X

Showing field welding of welds #12 & #13

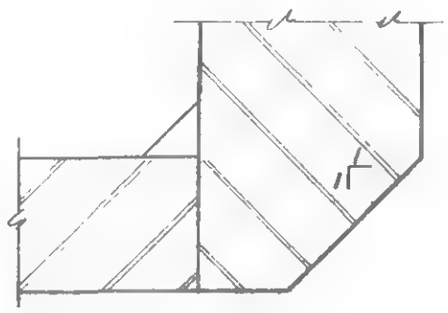

T1 or T2 > weld #12 or #13

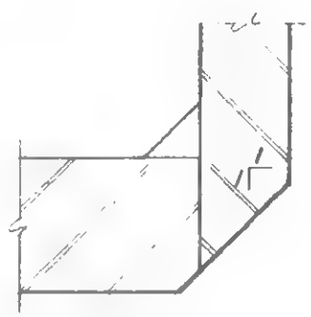

T1 or T2 < weld #12 or #13

DETAIL Y

Showing edge preparation for weld #12 & #13

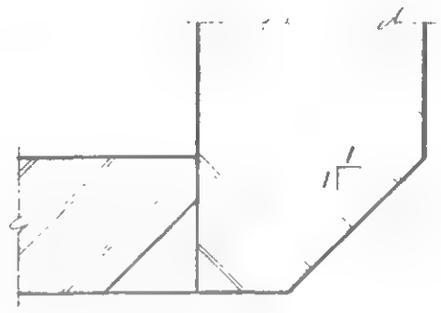

T3 > weld #13

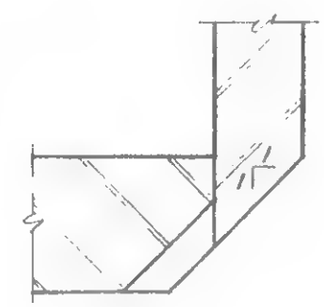

T3 < weld #13

DETAIL Z

Showing edge preparation for weld #13

LICENSED PROFESSIONAL ENGINEER
LESLIE E. ROBERTSON
No. 34360
UNIVERSITY OF THE STATE OF NEW YORK

DESIGNED H. I. GELLER
DRAWN J. Gricius
REVIEWED W. Brewer

19-AB-1004.2

SKILLING, HELLE, CHRISTIANSEN, ROBERTSON — Structural & Civil Engineers

PROJECT: THE WORLD TRADE CENTER | TITLE: EXTERIOR WALL - SPANDREL SPLICE REPAIR PROCEDURE | DATE: 6-20-69

REVISIONS

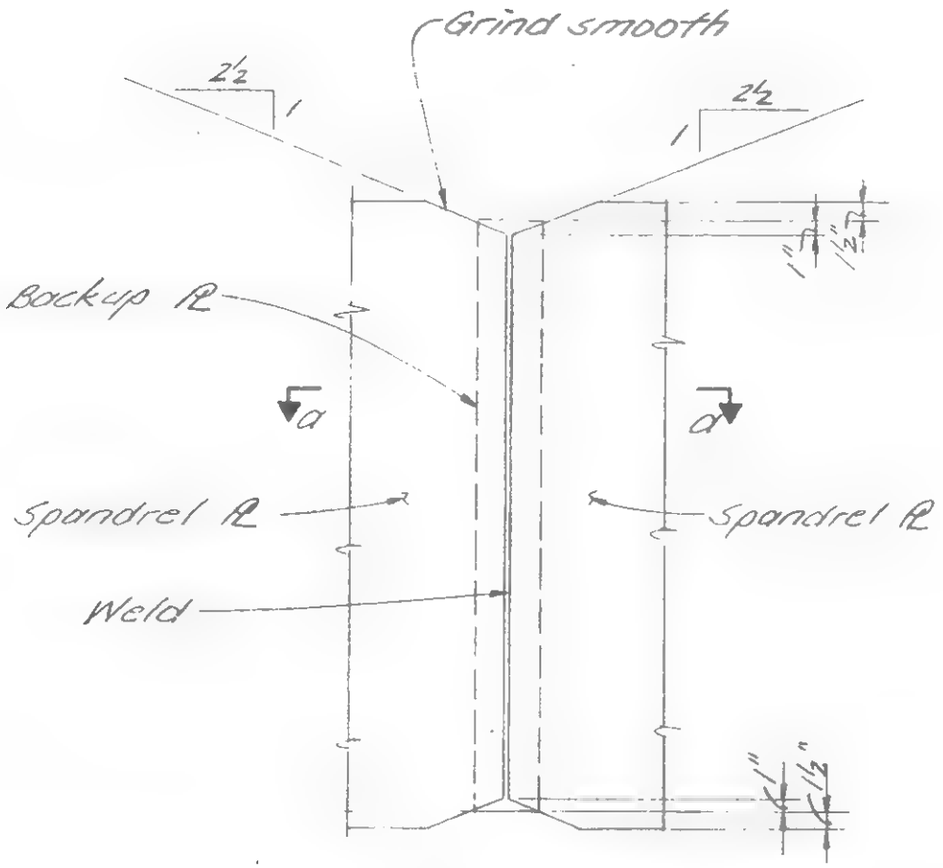

WELDED SPANDREL CONNECTION

NOTES:

A. Incorrect spandrel splice plates:
If the dimensions, thickness or hole pattern of the splice plates are incorrect, the plates should be discarded and replaced.

B. Incorrect hole pattern in spandrel plates:
Holes in spandrel plates that are not properly positioned should be filled with weld and ground flush. The correct hole pattern should then be drilled.

C. The spandrel plates may be butt welded as shown in lieu of the above procedures.

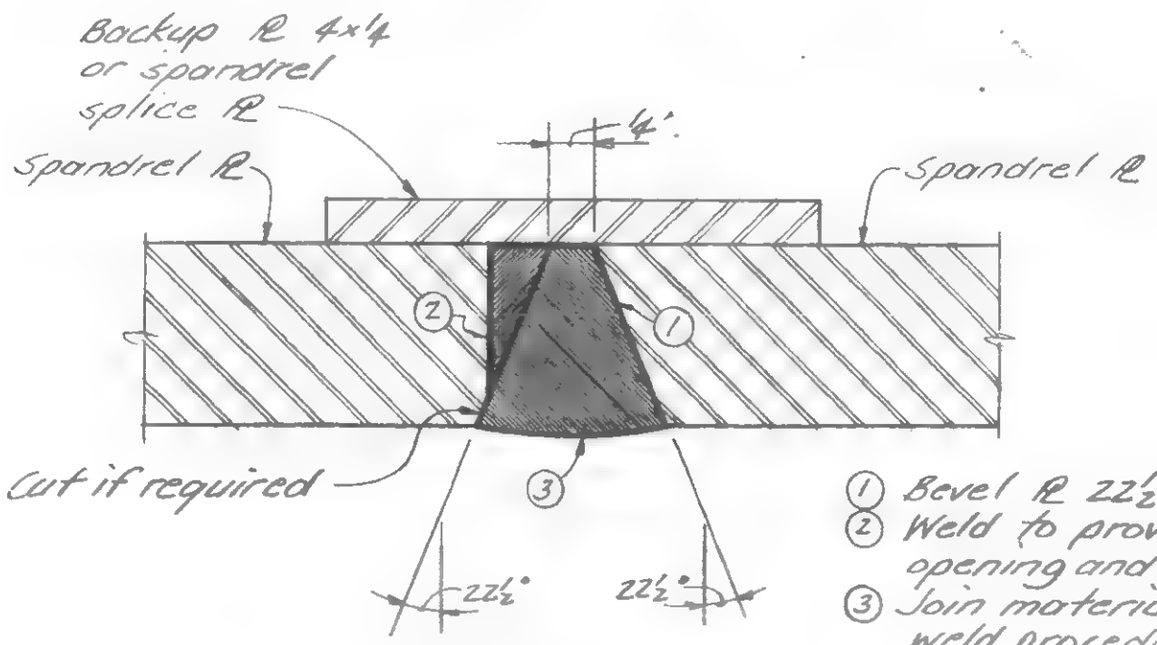

Section a-a

① Bevel PL 22½°
② Weld to provide 4" root opening and 22½° bevel.
③ Join material by normal weld procedures (AWS 8U-2)

Notes:

1. Welding electrode shall be determined by the higher Fy of the spandrel plates. See Welding Electrode Table, 19-AB-1004.
2. Preheat shall be not less than AWS minimum, and shall conform, wherever applicable, to the steel manufacturers recommendations.

DESIGNED H. I. GELLER
DRAWN J. Adams
REVIEWED W. Brewer

19-AB-1005

SKILLING - HELLE - CHRISTIANSEN - ROBERTSON Structural & Civil Engineers

PROJECT THE WORLD TRADE CENTER | TITLE PUMP PLATFORM - EL 294 - TOWER A | DATE 8/7/69

REVISIONS

For opening in grating see approved pump shop dwgs.

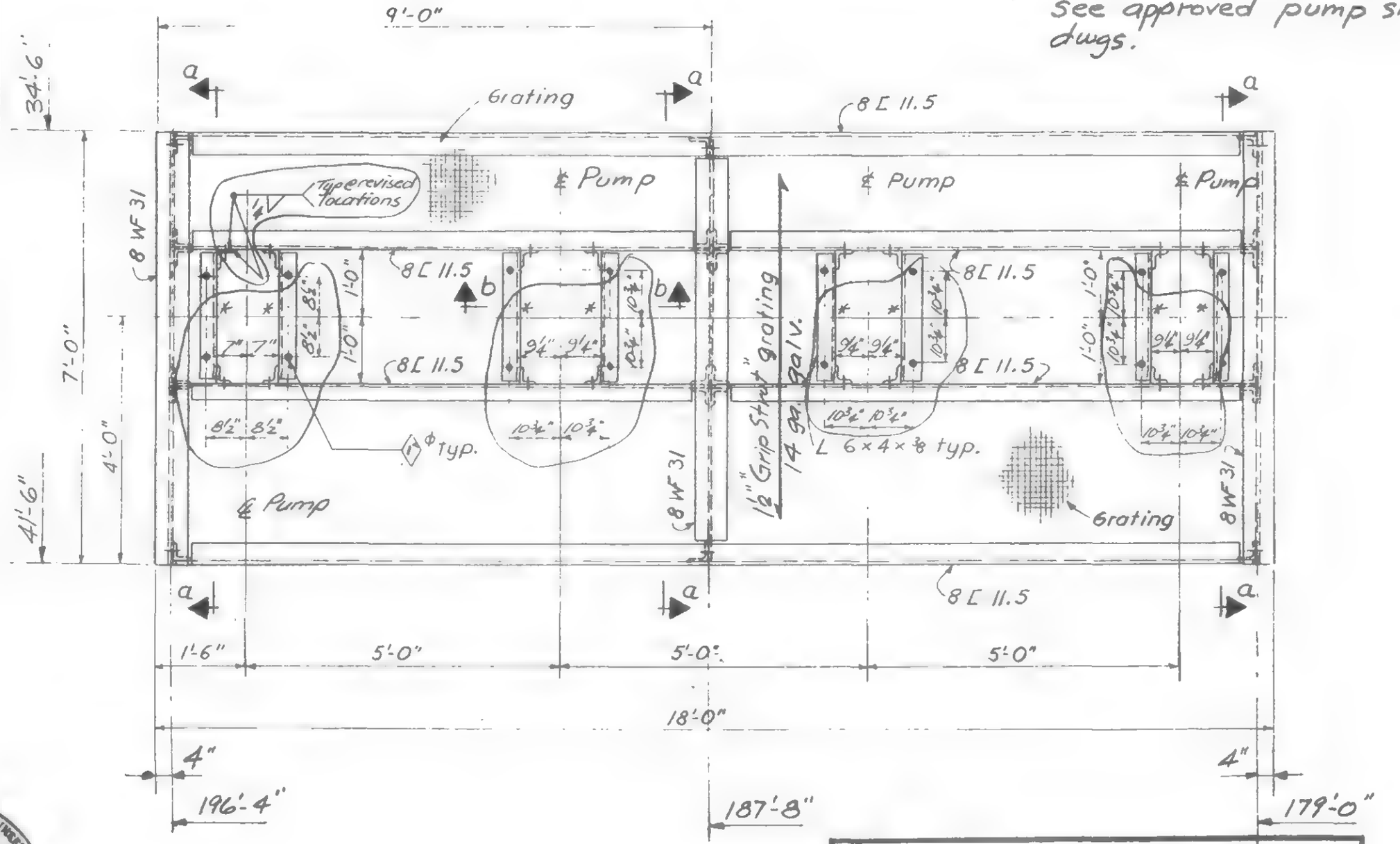

Revisions:

(+) Provide new 6×4×⅜ L and end clips. Connect to support Cs by field welds as shown.

(○) Revised pump bolt locations.

Reference Dwg: 6-A82-30

LICENSED PROFESSIONAL ENGINEER LESLIE E. ROBERTSON No. 34360 UNIVERSITY OF THE STATE OF NEW YORK

19-A-1010

SKILLING - HELLE - CHRISTIANSEN - ROBERTSON — Structural & Civil Engineers

PROJECT THE WORLD TRADE CENTER | TITLE PUMP PLATFORM @ 41ST FLOOR | DATE 8-7-69

REVISIONS

8/29/69

Revisions: Add 6x2⊓'s @ pump base locations. Revisions included herein are circled.

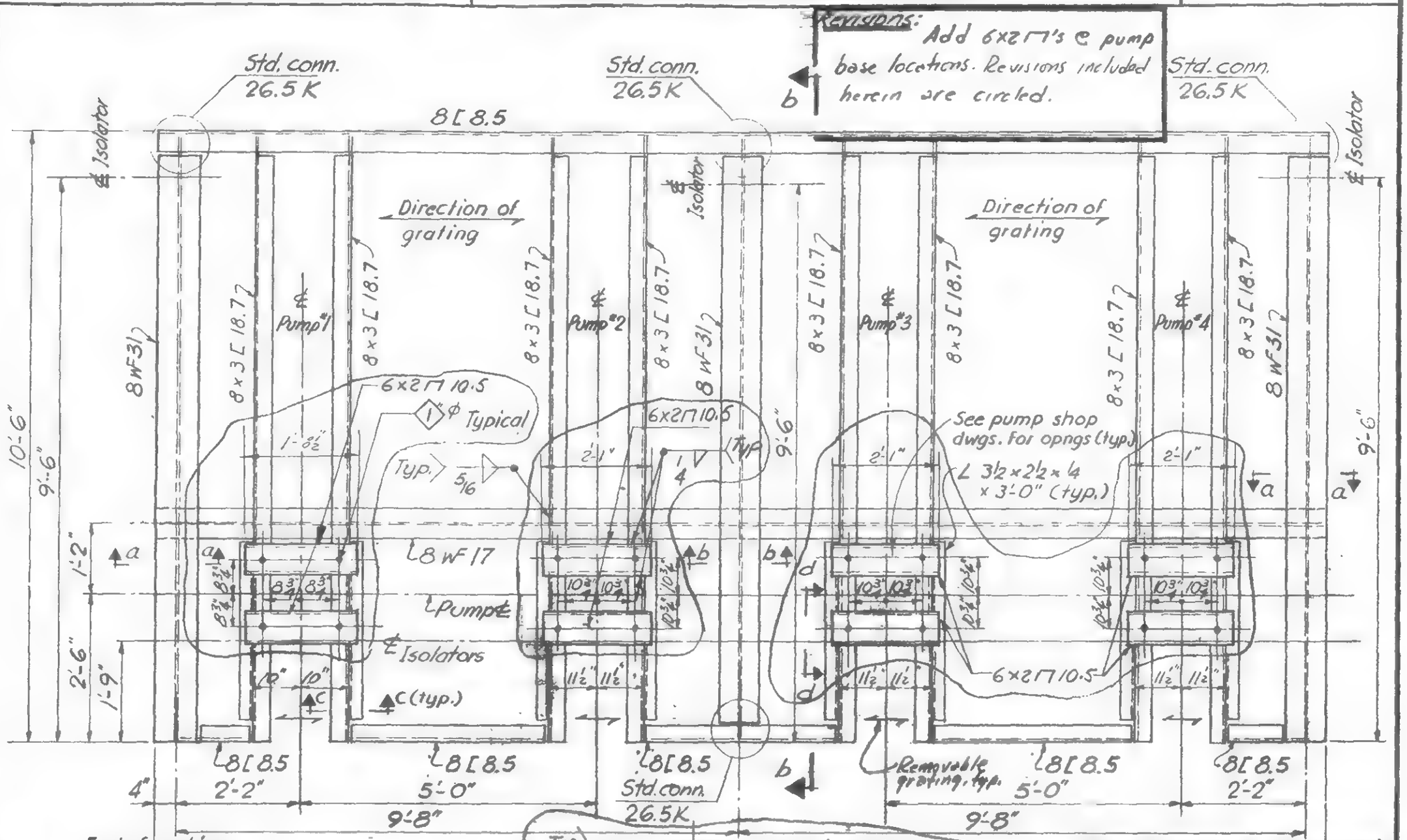

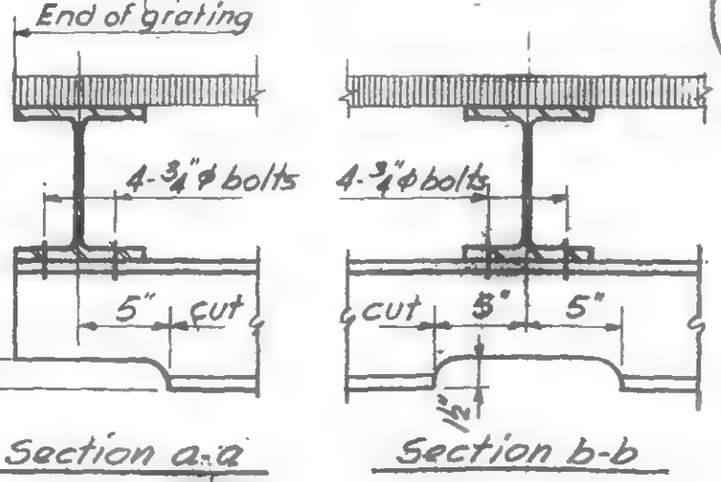

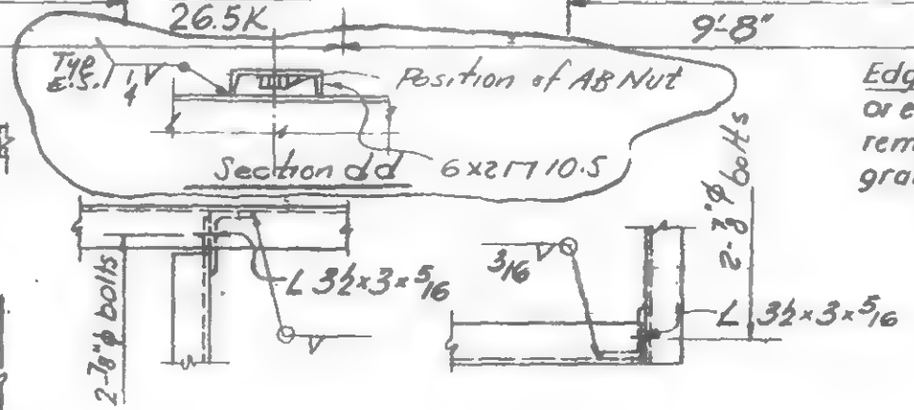

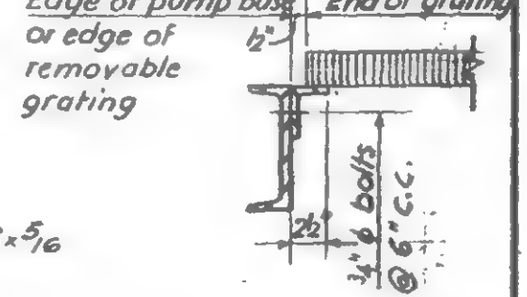

TYPICAL DETAILS

Section c-c
Reference Dwg 6-AB2-37

19-AB-1011

LICENSED PROFESSIONAL ENGINEER
LESLIE E. ROBERTSON
No. 34360
UNIVERSITY OF THE STATE OF NEW YORK

SKILLING - HELLE - CHRISTIANSEN - ROBERTSON Structural & Civil Engineers

PROJECT THE WORLD TRADE CENTER | TITLE PUMP PLATFORM EL.294 TOWER B | DATE 8/7/69

REVISIONS

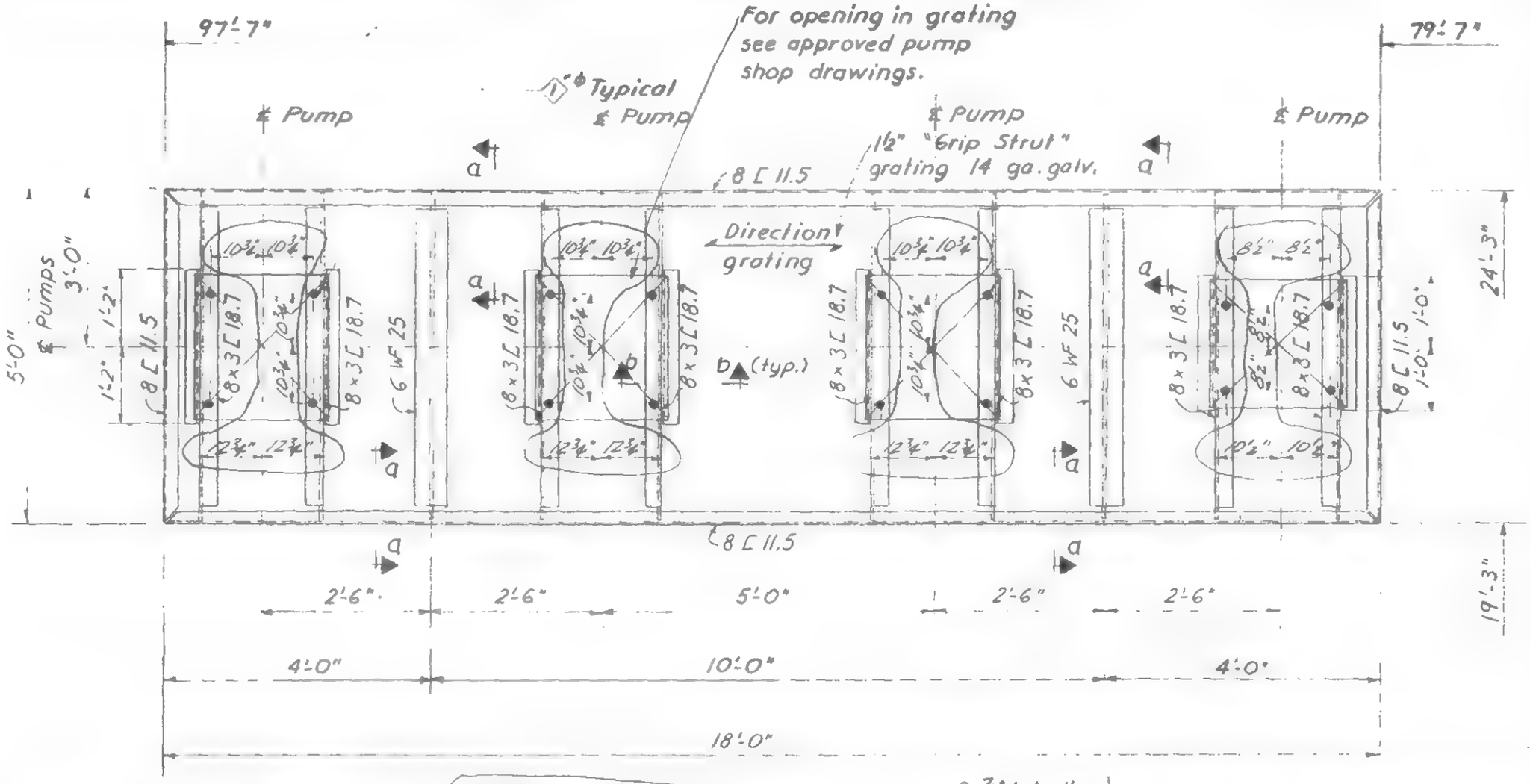

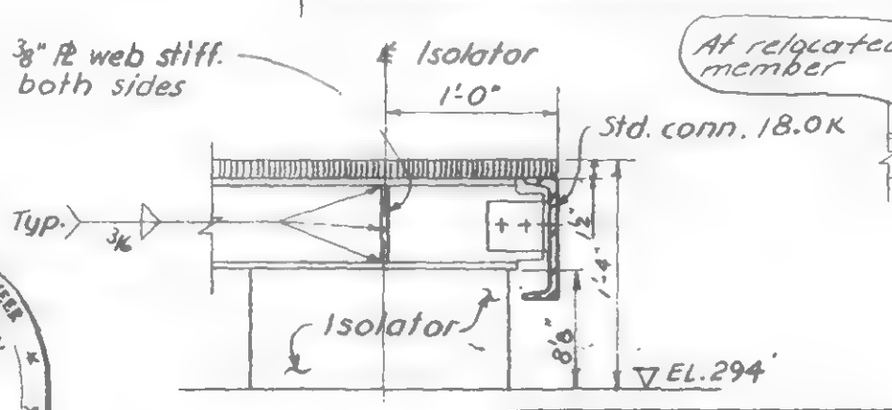

Section a-a

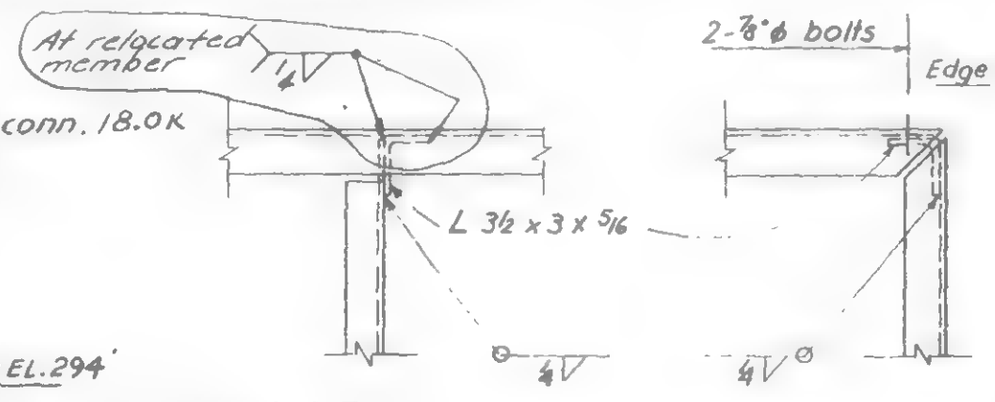

Typical Details

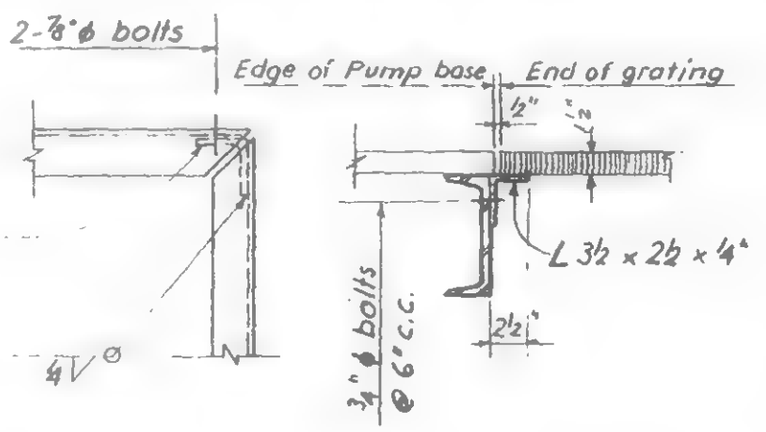

Section b-b

Revision work:
1. Revised pump bolt locations. Connect relocated members by field welding as shown.

Reference Dwg. 6-1827-41

19-B-1012

LICENSED PROFESSIONAL ENGINEER LESLIE E. ROBERTSON No. 34360 UNIVERSITY OF THE STATE OF NEW YORK

SKILLING - HELLE - CHRISTIANSEN - ROBERTSON Structural & Civil Engineers

PROJECT THE WORLD TRADE CENTER | TITLE PUMP PLATFORM AT 75TH FLOOR | DATE 8-7-69

REVISIONS
8/29/69

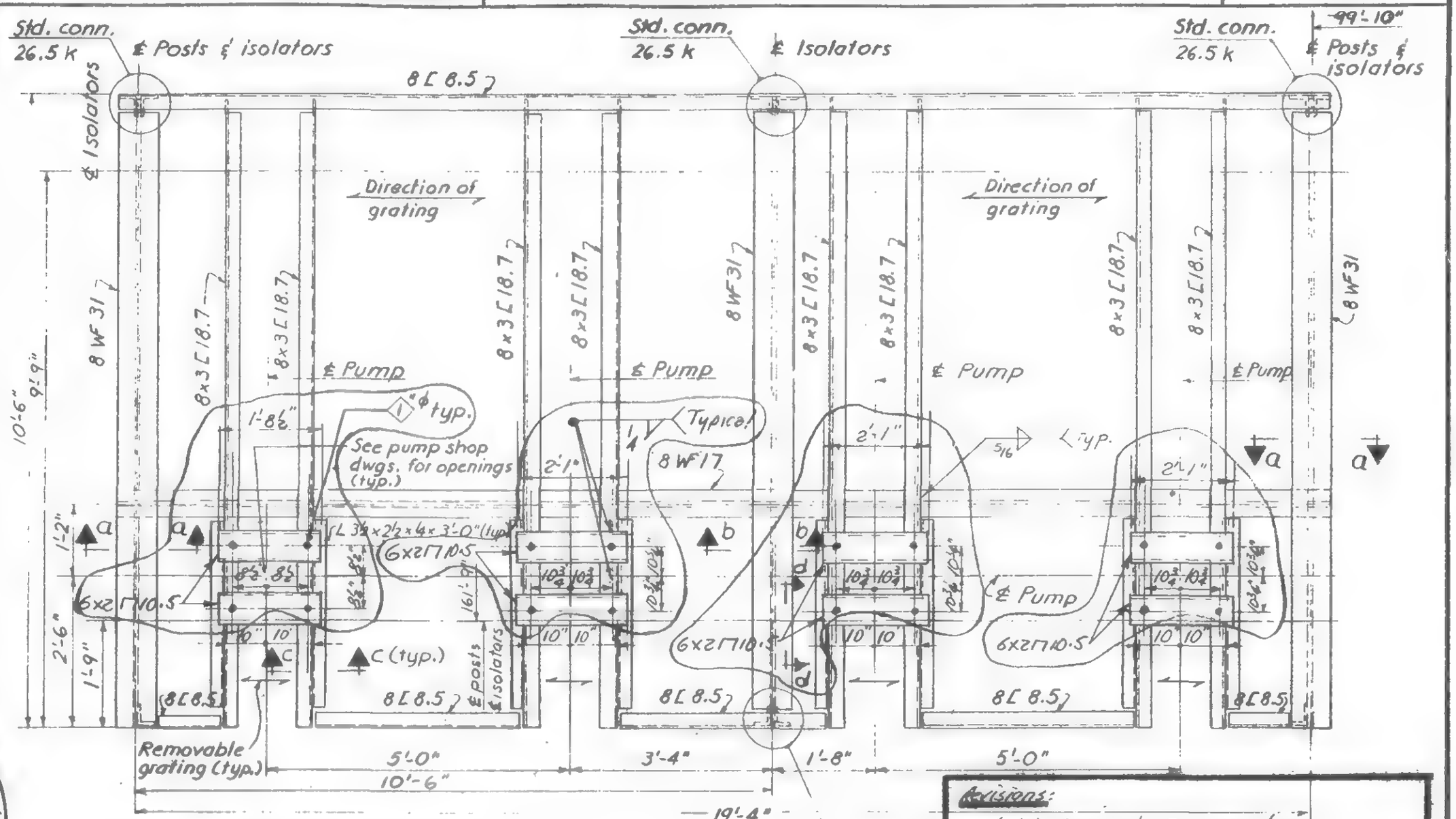

Revisions:
Add 6x2 C's @ pump base locations. Revisions included herein are circled

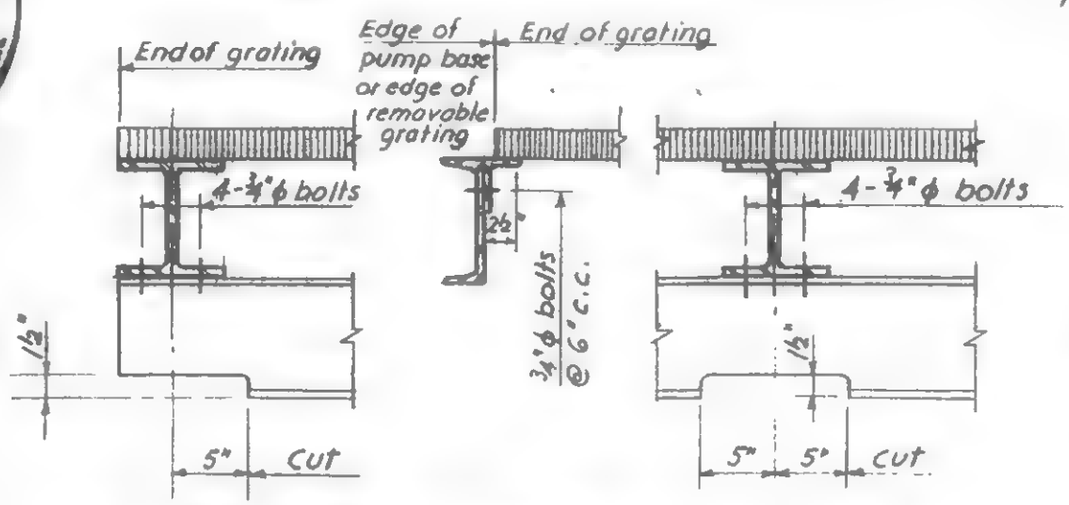

Section a-a Section c-c Section b-b

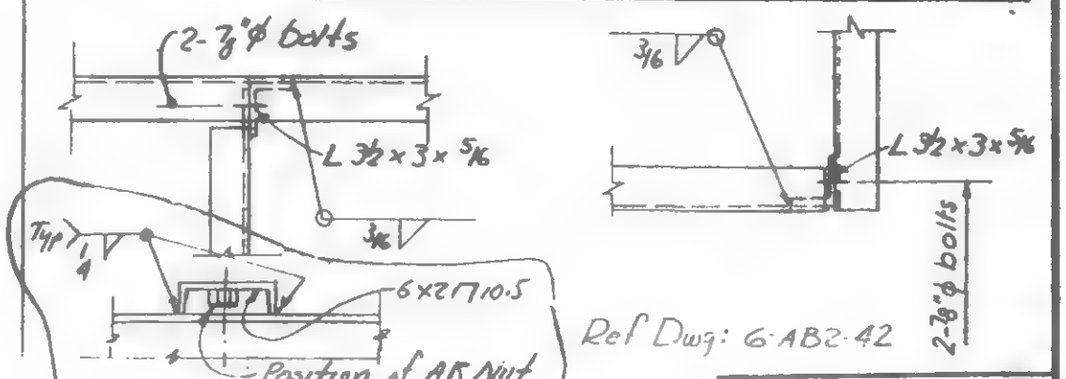

Ref Dwg: 6-AB2-42

Section d-d Typical Details

19-AB-1013

LICENSED PROFESSIONAL ENGINEER
LESLIE E. ROBERTSON
No. 34360
UNIVERSITY OF THE STATE OF NEW YORK

SKILLING, HELLE, CHRISTIANSEN, ROBERTSON — Structural & Civil Engineers

PROJECT: THE WORLD TRADE CENTER | TITLE: REVISION AFTER FABRICATION - TRUSS BRACES | DATE: 8/18/69

REVISIONS

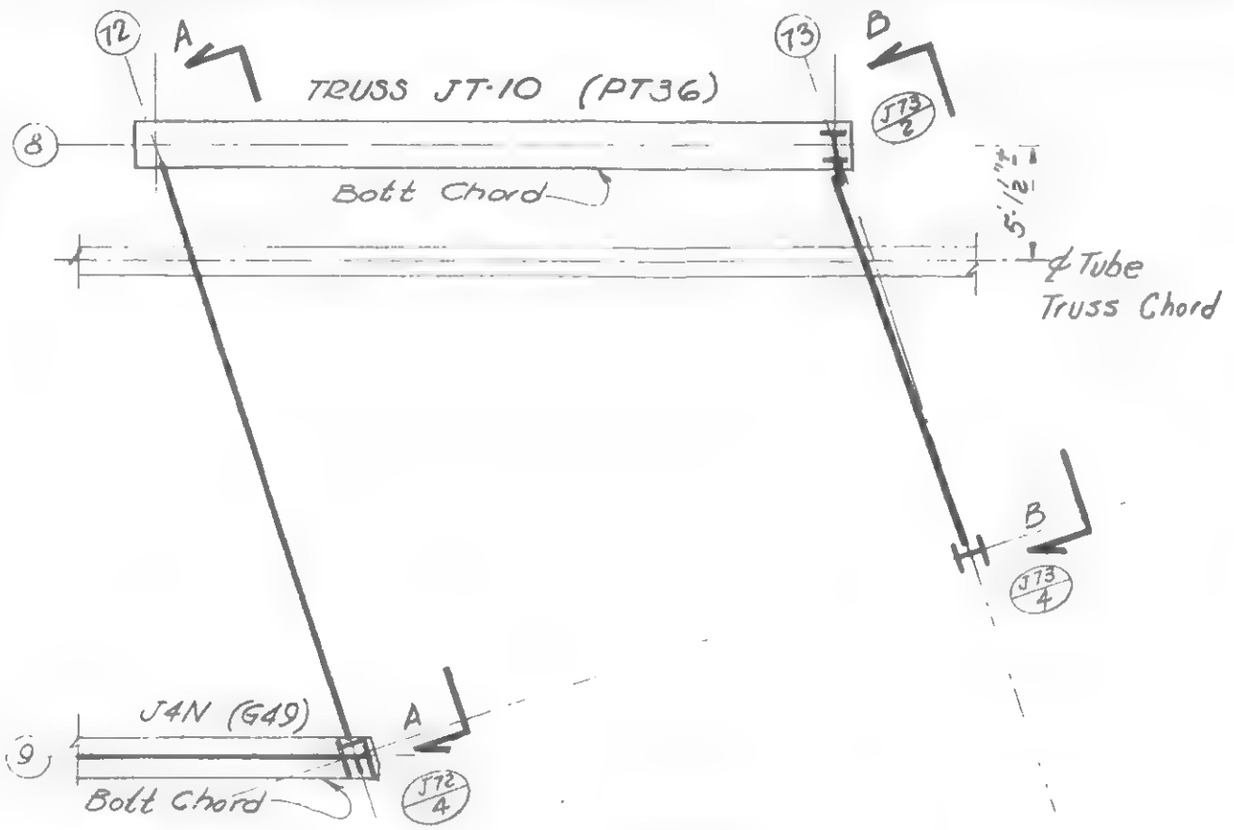

PLAN

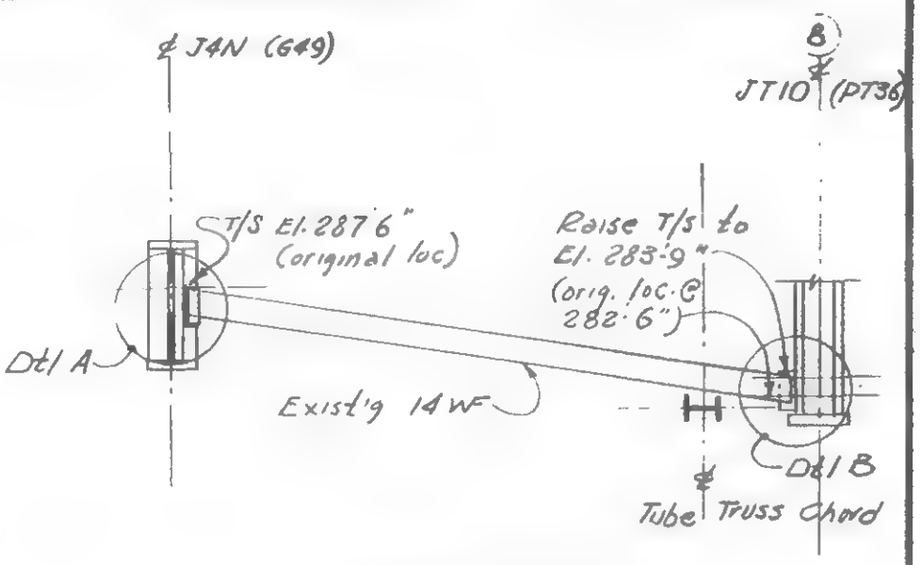

SECTION A-A

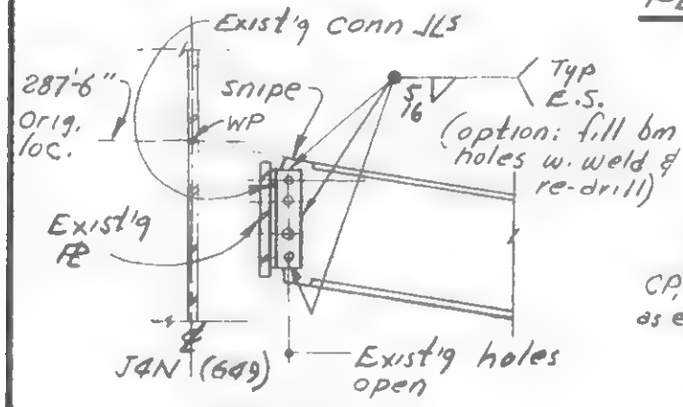

DETAIL A

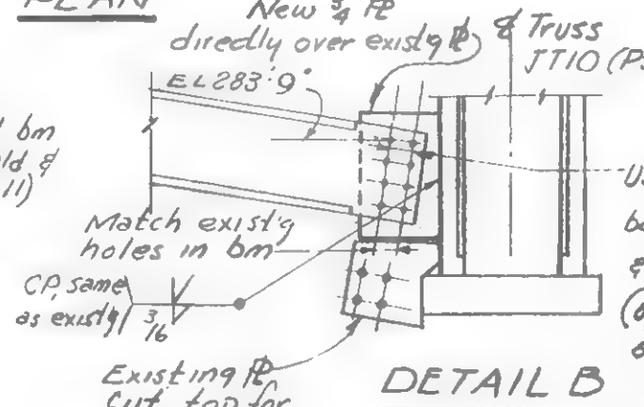

DETAIL B

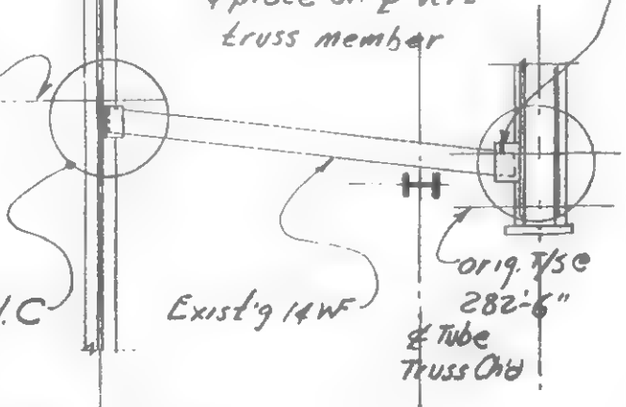

SECTION BB

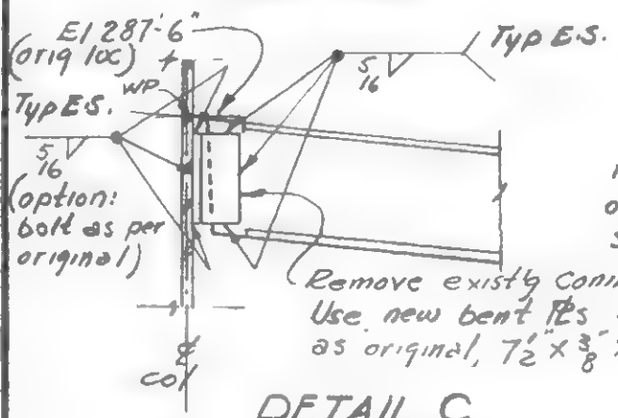

DETAIL C

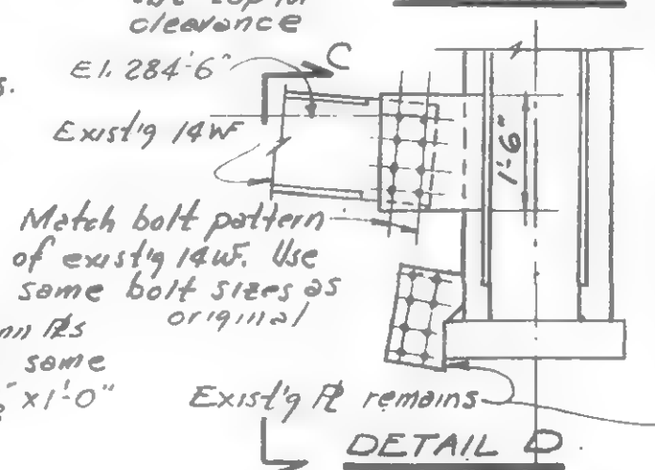

DETAIL D

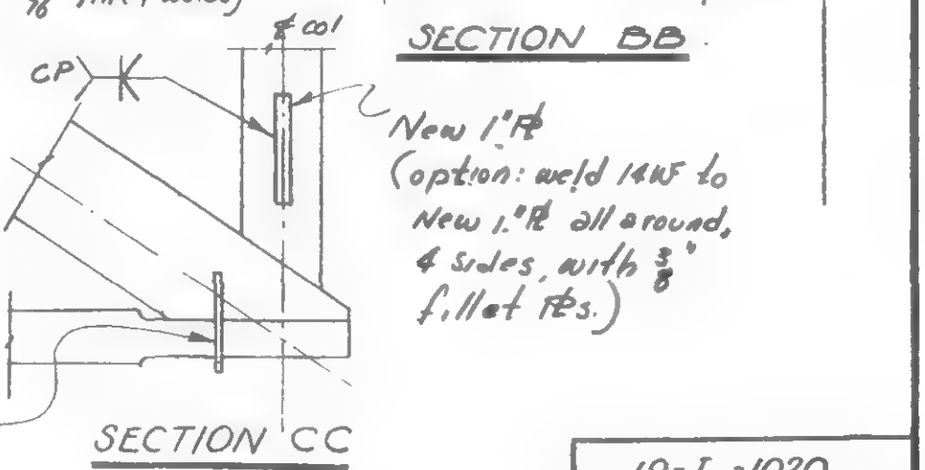

SECTION CC

DESIGNED
DRAWN
REVIEWED

19-J-1020

SKILLING, HELLE, CHRISTIANSEN, ROBERTSON — Structural & Civil Engineers

PROJECT: THE WORLD TRADE CENTER | TITLE: STRENGTHENING OF BEAM TO GIRDER CONNECTION | DATE: 10-17-69

REVISIONS

Due to widening of work-platform to 52'-0" ——— North of Tower 'B'

(Change No. 503.100)

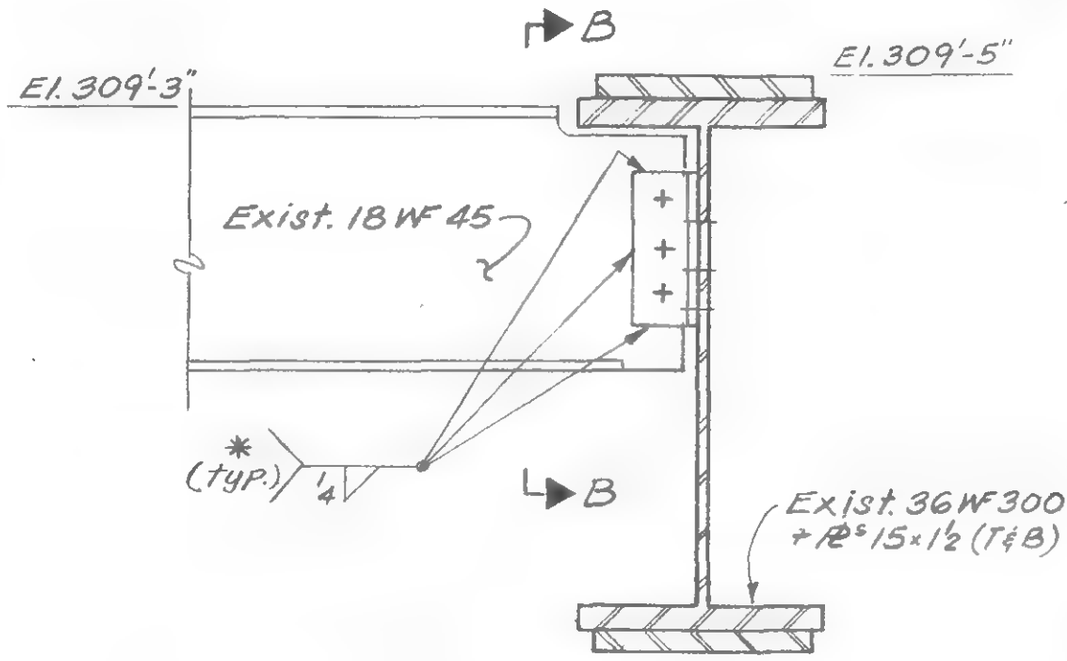

Section A-A

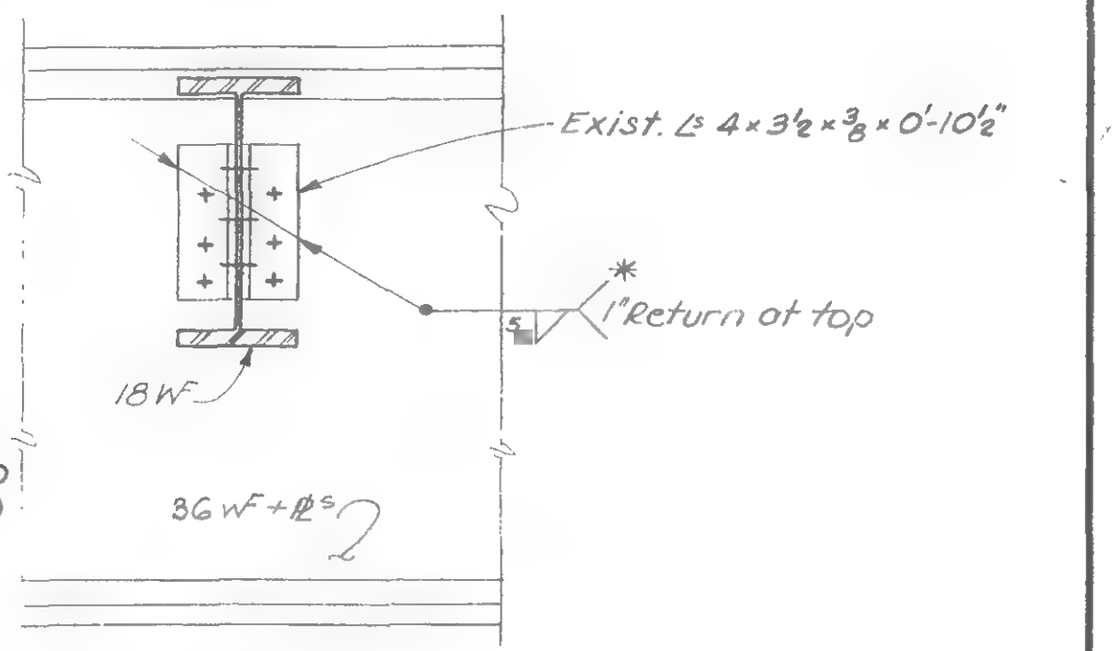

Section B-B

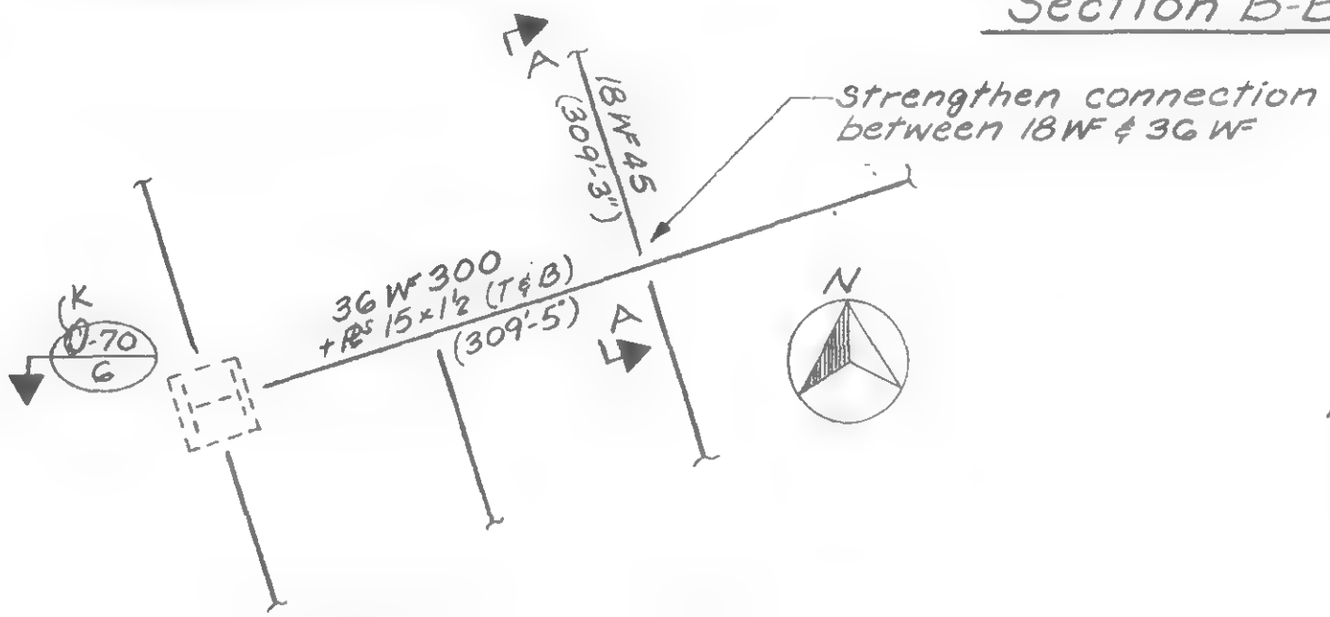

PART PLAN AT EL. 310

Notes:

1. * — added welding
2. All welds to be E70xx

LICENSED PROFESSIONAL ENGINEER — LESLIE E. ROBERTSON — No. 34360 — UNIVERSITY OF THE STATE OF NEW YORK

DESIGNED

DRAWN: S.C.

REVIEWED: E.L.

19-K-1025

SKILLING, HELLE, CHRISTIANSEN, ROBERTSON — Structural & Civil Engineers

PROJECT THE WORLD TRADE CENTER | TITLE MODIFICATION OF HANGER IN SOUTH PROJ. TO CLEAR EXISTING PATH TRACK (WTC-250.00) | DATE 11-11-69

REVISIONS

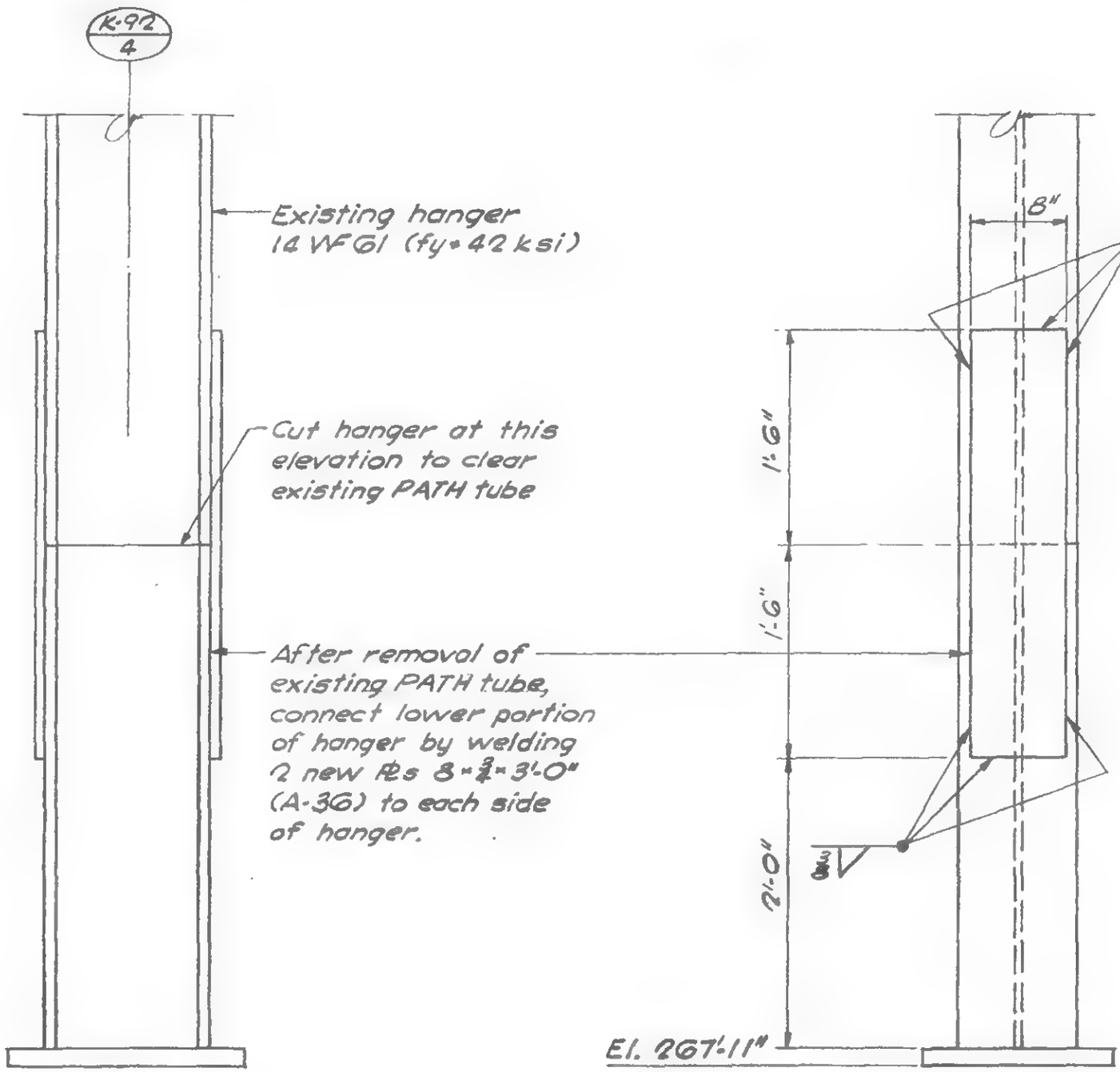

NOTES:

1. All welds to be E70XX

LICENSED PROFESSIONAL ENGINEER
LESLIE E. ROBERTSON
No. 34960
UNIVERSITY OF THE STATE OF NEW YORK

DESIGNED

DRAWN
G.K.

REVIEWED
E.L.

19-K-1026

SKILLING, HELLE, CHRISTIANSEN, ROBERTSON — Structural & Civil Engineers

PROJECT	TITLE	DATE
THE WORLD TRADE CENTER	CUT OPENINGS IN ℄ GIRDER J2A & J2F (CHANGE № 435.063) (REF. JBB DWG. SK-M-J-97 8-21-69)	11-24-69

REVISIONS

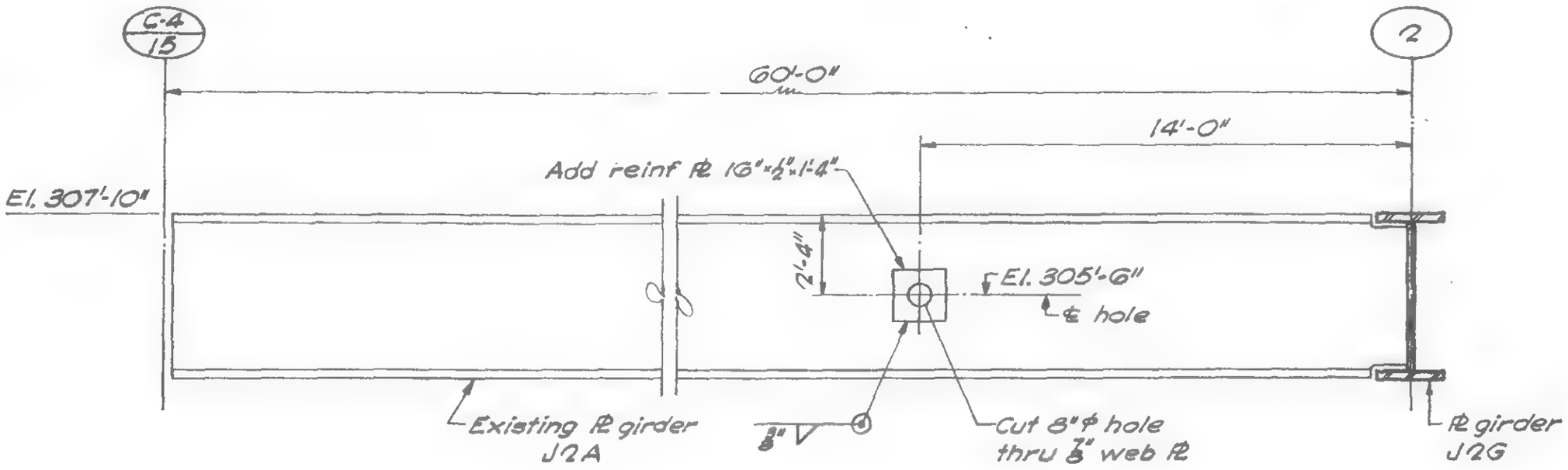

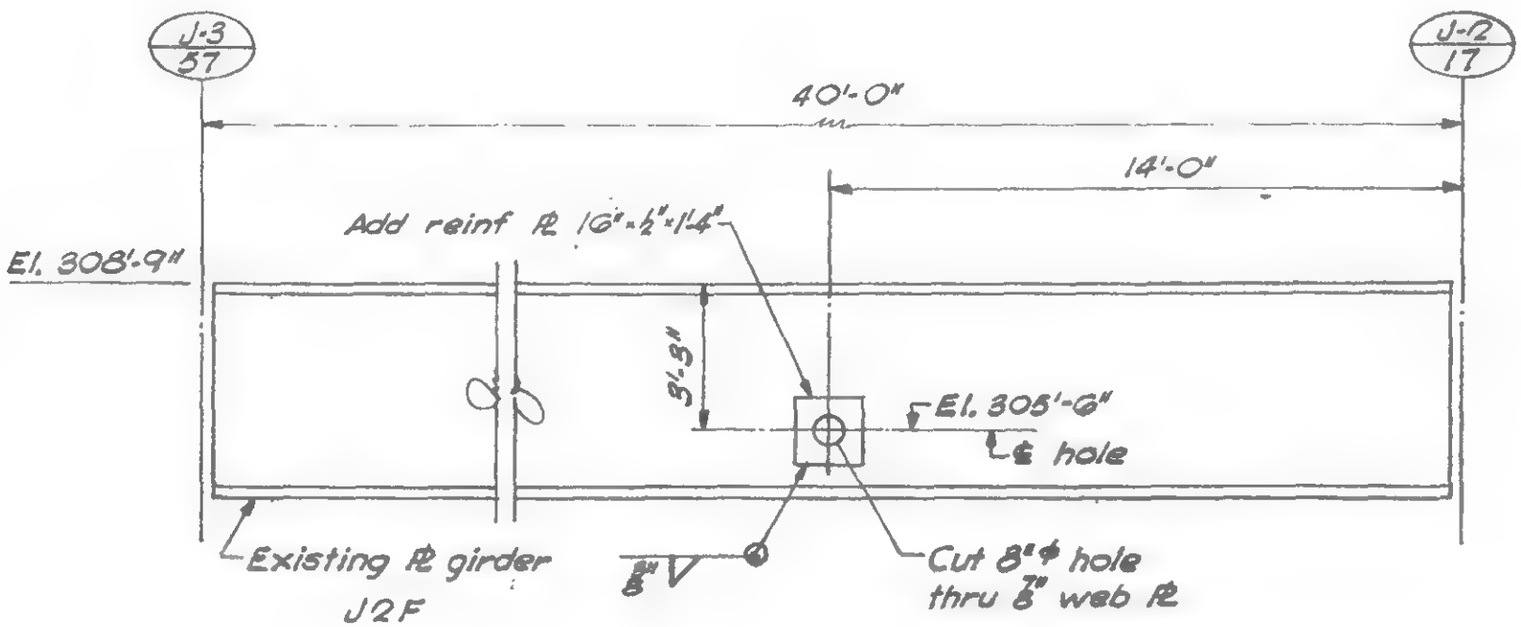

LICENSED PROFESSIONAL ENGINEER — LESLIE E. ROBERTSON — No. 34960 — UNIVERSITY OF THE STATE OF NEW YORK

DESIGNED

DRAWN
G.K.

REVIEWED
E.L.

19-J-1027

SKILLING, HELLE, CHRISTIANSEN, ROBERTSON — Structural & Civil Engineers

PROJECT: THE WORLD TRADE CENTER | TITLE: KITCHEN ELEVATOR FRAMING | DATE: 12-3-69

REVISIONS

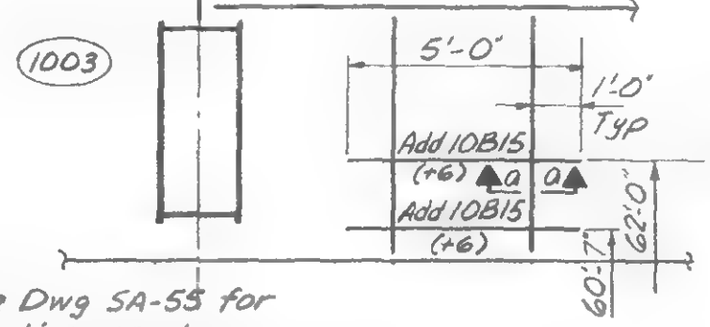

See Dwg SA-55 for existing members

FRAMING PLAN - FLOOR 47

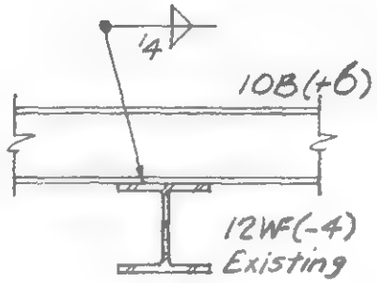

Section a-a
typ. 4 locations

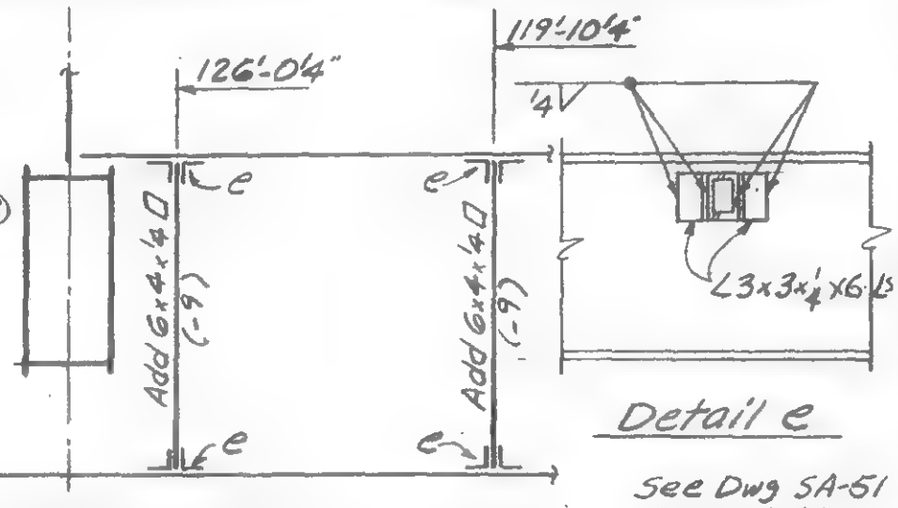

FRAMING PLAN-FLOOR 43

Detail e

See Dwg SA-51 for existing members

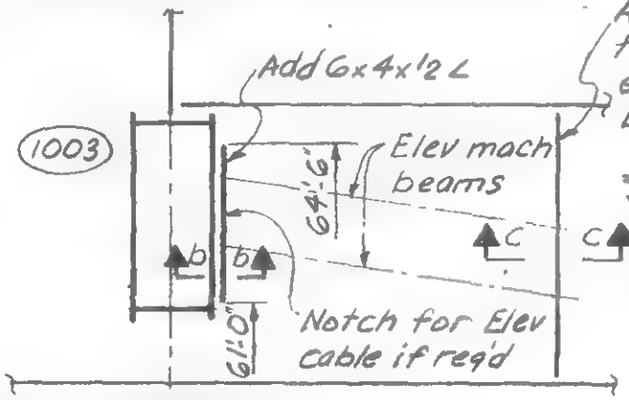

See Dwg SA-54 for existing members

FRAMING PLAN - FLOOR 46

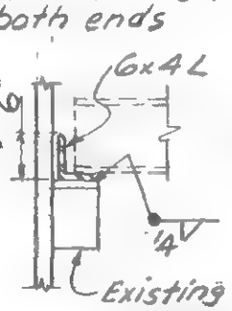

Existing Det 809A

Section b-b

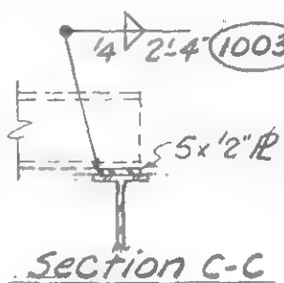

Section C-C

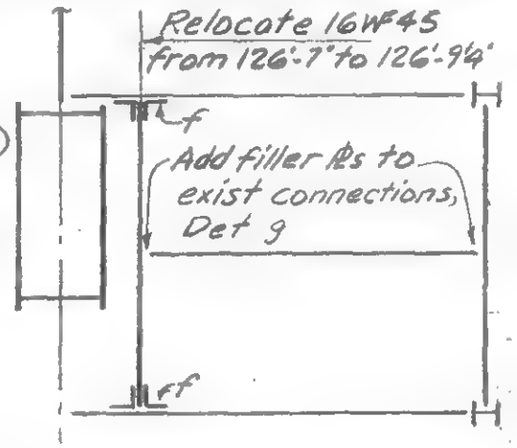

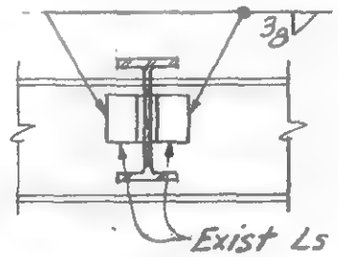

Detail f

See Dwg SA-51 for existing members

FRAMING PLAN-FLOOR 43 (-4'-0")

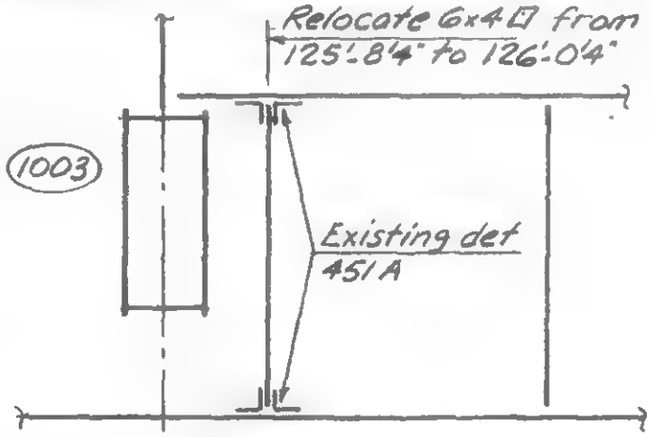

See Dwgs SA-52 & SA-53 for existing members

FRAMING PLAN - FLOORS 44 & 45

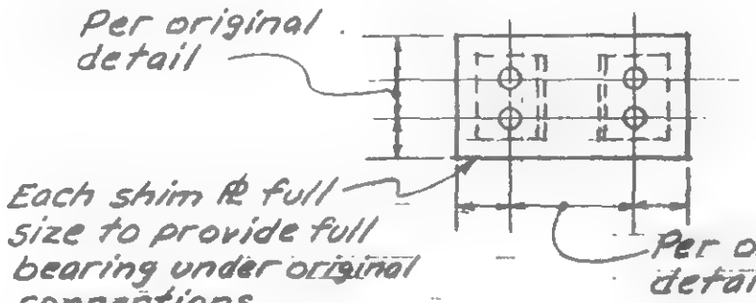

Detail g

Notes:
Members not identified are existing members shown in referenced drawings

VOID

LICENSED PROFESSIONAL ENGINEER — LESLIE E. ROBERTSON — No. 34360 — UNIVERSITY OF THE STATE OF NEW YORK

SIGNED: LER

DRAWN: A. FRANQUI

REVIEWED

19-A-1030

SKILLING, HELLE, CHRISTIANSEN, ROBERTSON — Structural & Civil Engineers

PROJECT THE WORLD TRADE CENTER | TITLE SUPP'TS FOR EXIST. TELEPHONE CONDUITS – N. & S. PROJ'S | DATE 3-3-70

REVISIONS

- 16-70 R GEN REV.

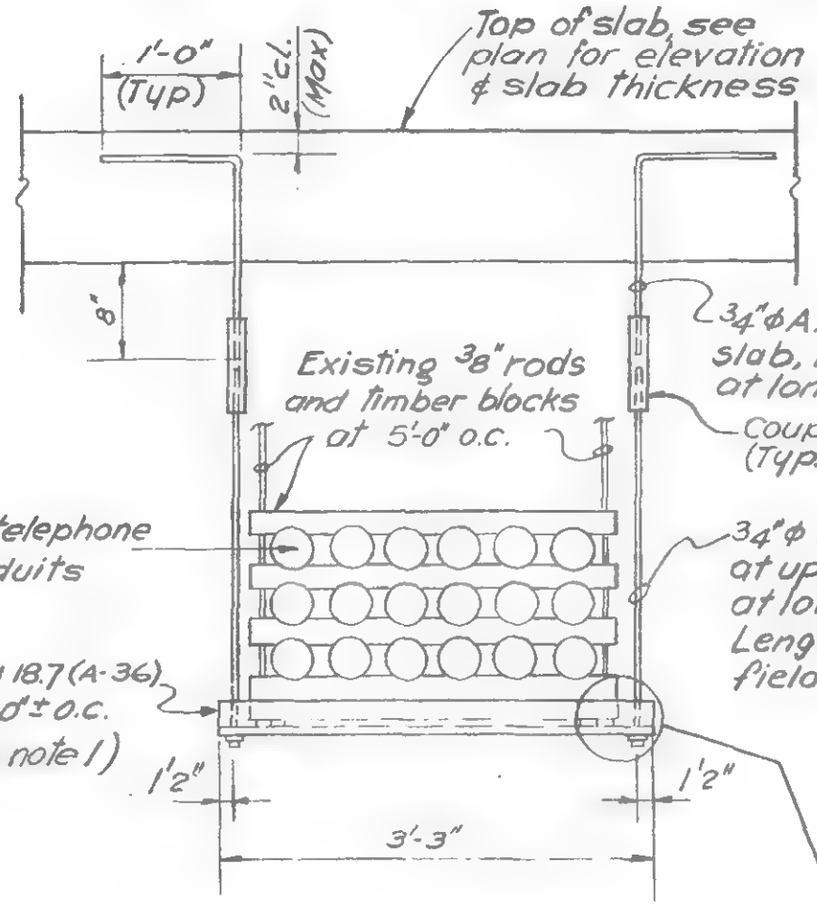

¾"ϕ A. bolt cast in conc. slab, to have 6" thread at longer end

Coupling (10" long) (Typ.)

¾"ϕ rod (with 6" thread at upper end & 3" thread at lower end) Length of rod to be field measured (typ.)

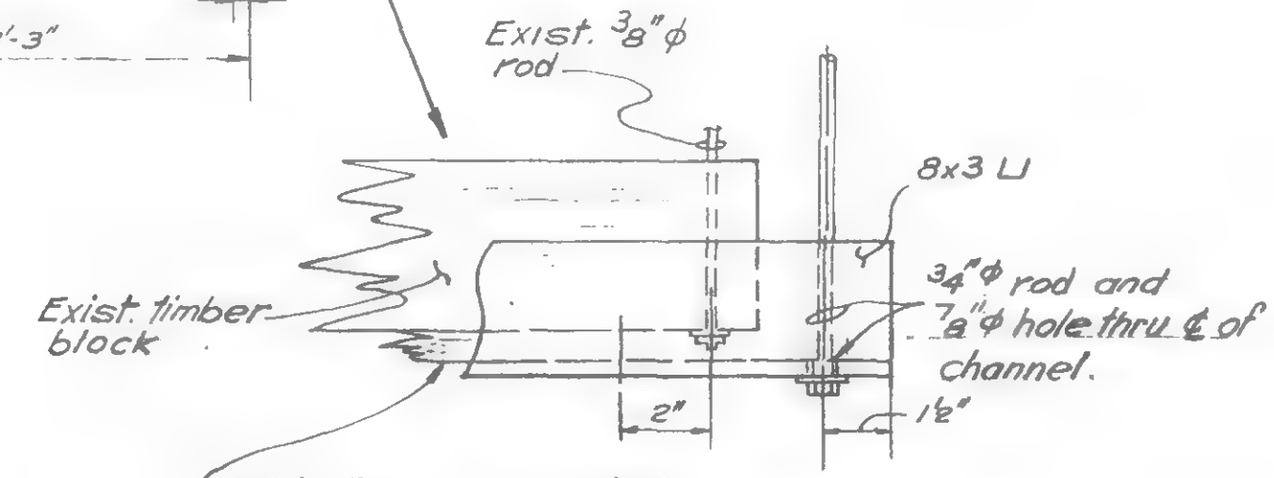

Add 3" wide creosoted oak plank. Thickness as reqd. to miss the nuts under existing. 3/8"ϕ rods (nail plank to block)

Procedure of installation

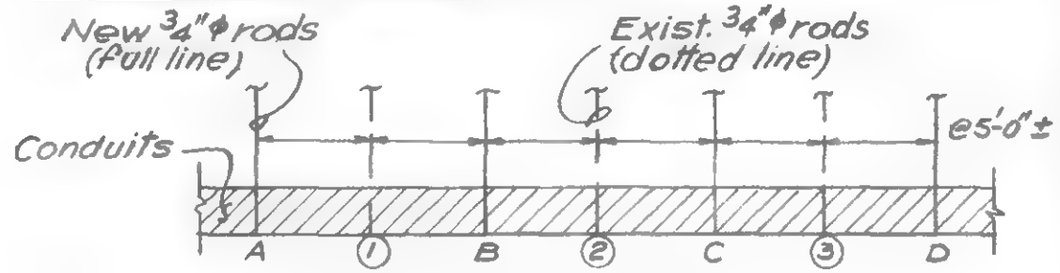

1.- Provide two new ⊔s for each Projection
2.- Install new ⊔s at point 'A' & 'B', one on each side of ①
3.- Remove existing ⊔ from point ① and place it at 'C' with new rods.
4.- Then, remove existing ⊔ from point ② and place it at 'D' with new rods.
5.- Repeat procedure until completion.

VOID
(PER E. L.)

LICENSED PROFESSIONAL ENGINEER — LESLIE E. ROBERTSON — No. 34360 — UNIVERSITY OF THE STATE OF NEW YORK

DESIGNED

DRAWN V. H. A

REVIEWED E.L.

19-K-1031

SKILLING, HELLE, CHRISTIANSEN, ROBERTSON — Structural & Civil Engineers

PROJECT: THE WORLD TRADE CENTER | TITLE: OPNG. THRU BEAMS BTW. COLS. K39-4 & K39-6 (El. 332') | DATE: 6-23-70

REVISIONS

(Per Change No. 405.037)
Supplement No. 1

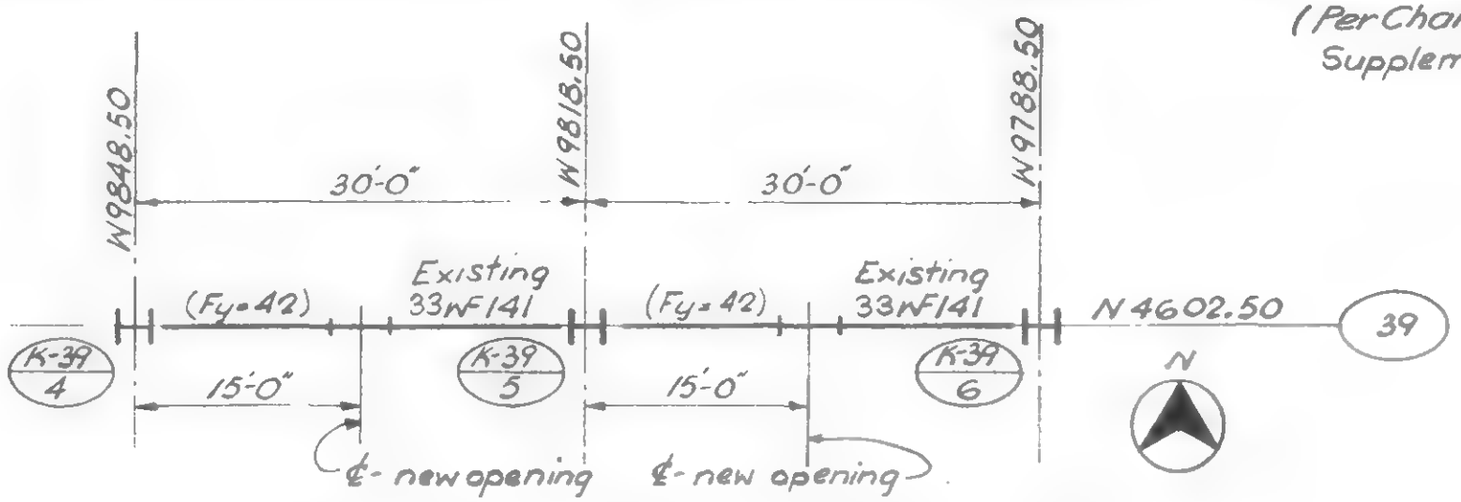

Port Plan at El. 332' (Zone K-2)
(North of Tower 'B')

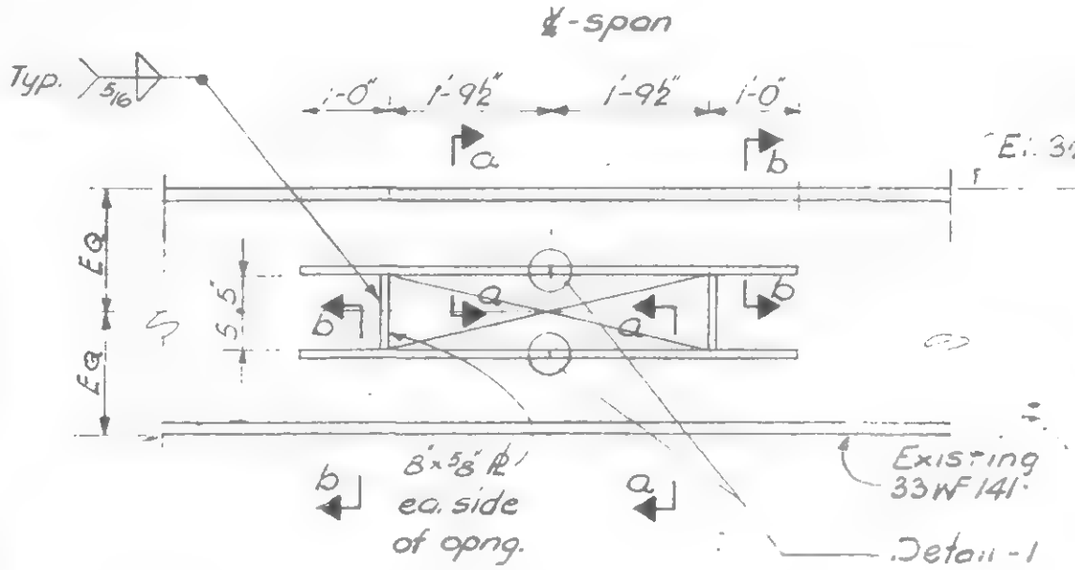

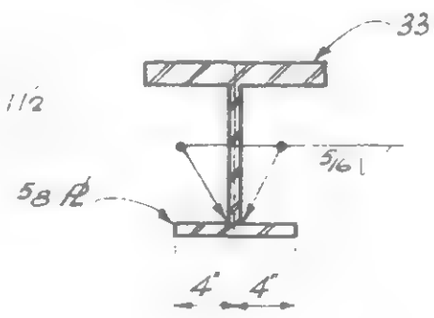

Section a-a

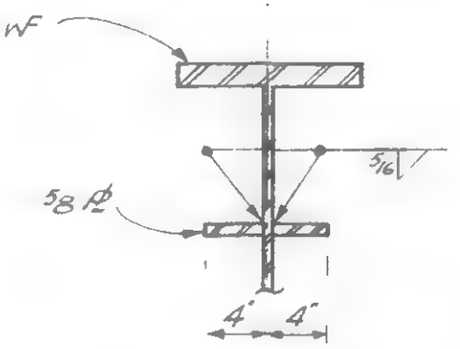

Section b-b

Elevation of Beam

Detail - 1

Notes:-
1. All Pl's to be A-36 steel
2. All electrodes to be E 70xx

LICENSED PROFESSIONAL ENGINEER — LESLIE E. ROBERTSON — No. 34360 — UNIVERSITY OF THE STATE OF NEW YORK

DESIGNED

DRAWN: D. Huggins

REVIEWED: E.L.

19-K-1035

SKILLING, HELLE, CHRISTIANSEN, ROBERTSON — Structural & Civil Engineers

PROJECT: THE WORLD TRADE CENTER | TITLE: TEMPORARY SUPPORT SYSTEM TO SUPPORT CONC POUR @ EL 294 | DATE: 8-25-70

REVISIONS

(Per letter TRCC to SHCR on 8-12-70)

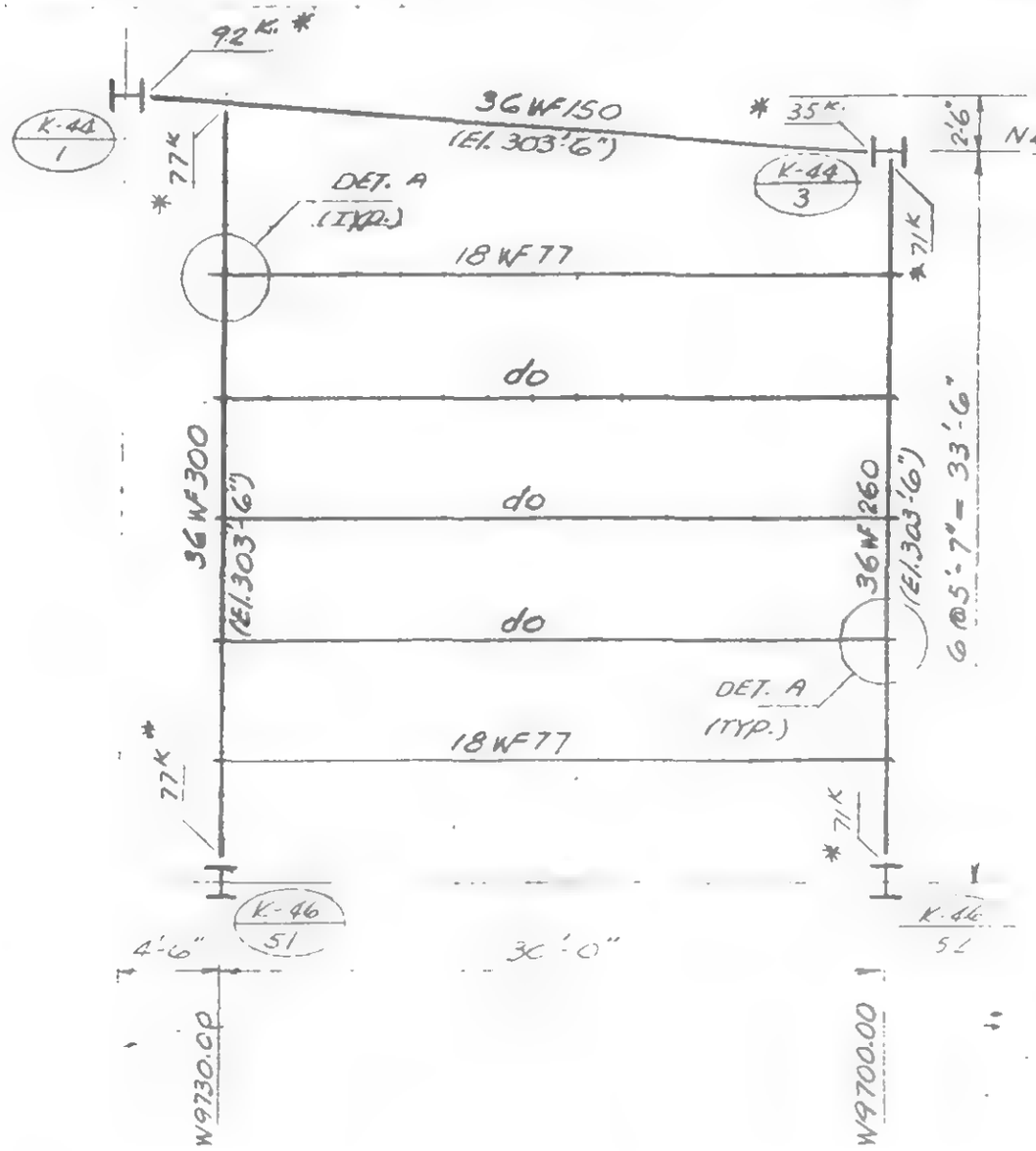

PLAN

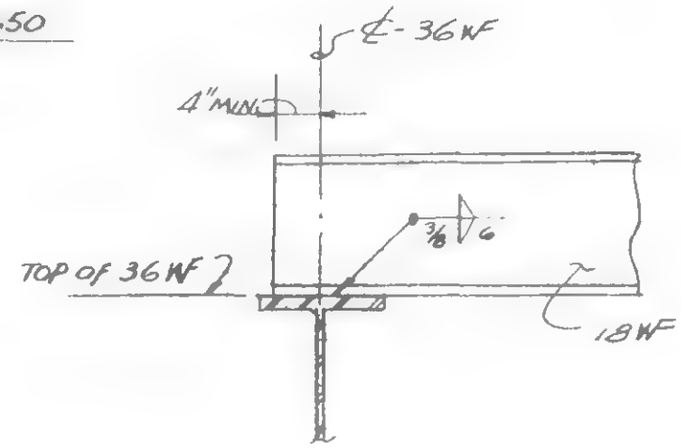

DETAIL - A

Notes:

1. All steel members shown to be A-36.
2. All electrodes to be E70xx.
3. *—field connection in accordance with AISC manual of steel construction, table VI
4. Field measure all dimensions between existing columns (K44-1, K44-3, K46-51 & K46-52)
5. Steel framing as shown and all the attached formwork shall not be removed until after completion of all concrete work at El. 294 between Tower 'B' and east slurry wall after the removal of existing PATH tube.

LICENSED PROFESSIONAL ENGINEER — LESLIE E. ROBERTSON — No. 34360 — UNIVERSITY OF THE STATE OF NEW YORK

SIGNED

DRAWN: S.C.

REVIEWED: E.L.

19-K-1036

SKILLING, HELLE, CHRISTIANSEN, ROBERTSON — Structural & Civil Engineers

PROJECT: THE WORLD TRADE CENTER | TITLE: DET. OF NEW HANGER & REINF. OF EXIST. BEAM CONN. | DATE: 10-1-70

REVISIONS

(EL. 310' ZONE J-4)

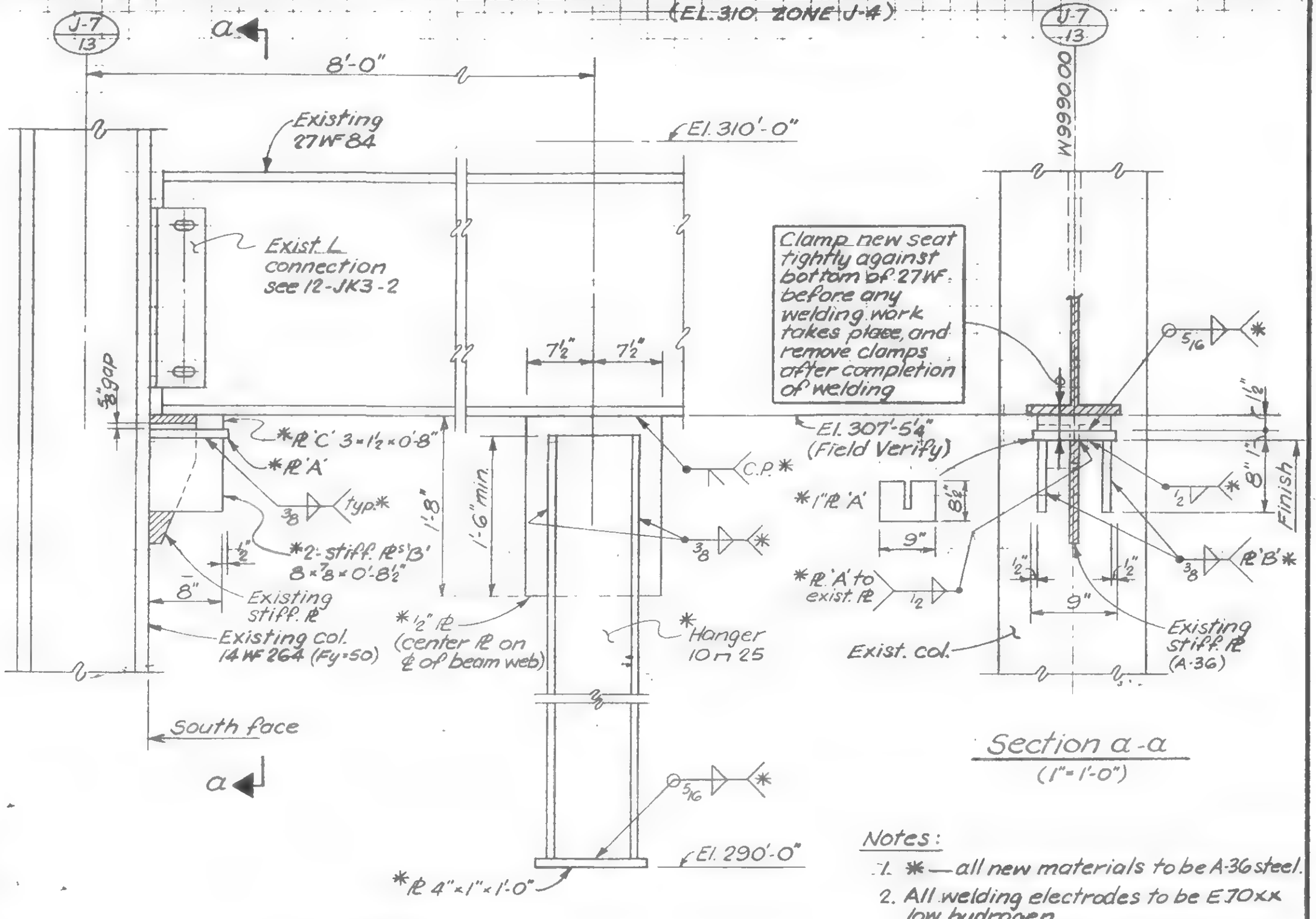

ELEVATION
(Looking east)
(1"=1'-0")

Section a-a
(1"=1'-0")

Notes:

1. * — all new materials to be A-36 steel.
2. All welding electrodes to be E70xx low hydrogen.
3. Hanger & ½" Pl to be removed at the direction of the Engineer.
4. Entire seat connection to be removed as described on 12-JK3-2

LICENSED PROFESSIONAL ENGINEER — LESLIE E. ROBERTSON — No 34360 — UNIVERSITY OF THE STATE OF NEW YORK

DESIGNED

DRAWN S.C.

REVIEWED E.L.

19-J-1037

SKILLING, HELLE, CHRISTIANSEN, ROBERTSON — Structural & Civil Engineers

PROJECT: THE WORLD TRADE CENTER

TITLE: REMOVE BEAMS OVER RAMP 'H' — EL.310' (ZONE K-5)

DATE: 12-4-70

(CHANGE NO. 433-092)

REVISIONS

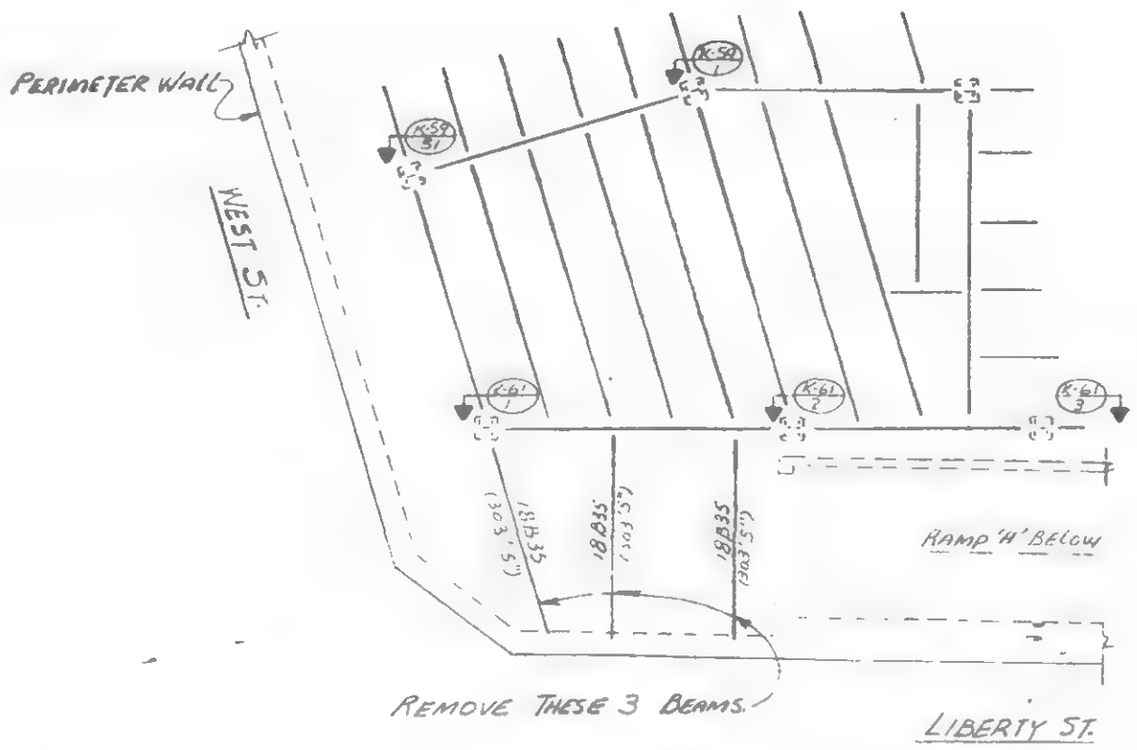

PART PLAN AT EL.310'-0"

KEY PLAN

LICENSED PROFESSIONAL ENGINEER
LESLIE E. ROBERTSON
NO. 34360
UNIVERSITY OF THE STATE OF NEW YORK

DESIGNED: ETL

DRAWN: ETL

REVIEWED: ETL

19-K-1038

SKILLING, HELLE, CHRISTIANSEN ROBERTSON | Structural & Civil Engineers

PROJECT THE WORLD TRADE CENTER | TITLE STEEL BEAM REPAIR AT EL. 310 - ZONE K-5 | DATE 1-15-71

REVISIONS

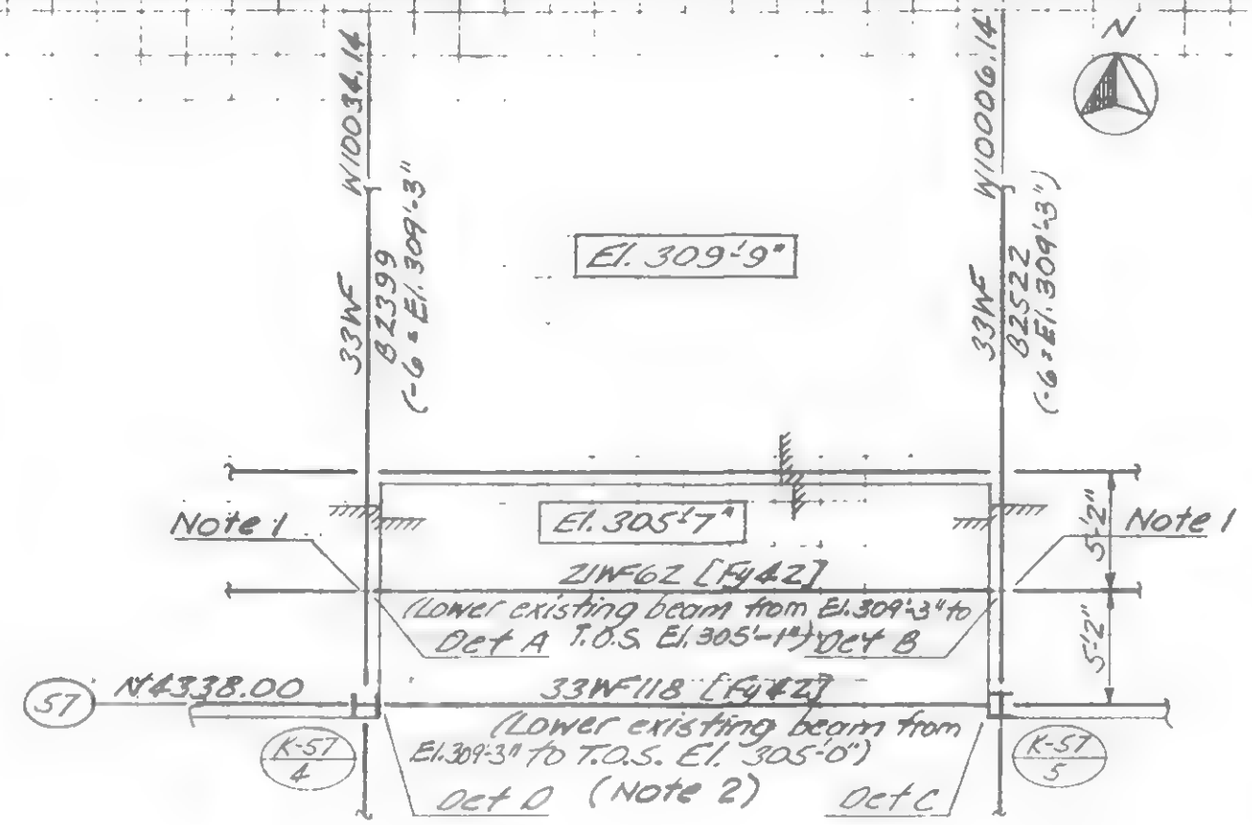

Part Plan at El. 310 - Zone K-5

Notes

1. Before unbolting provide adequate temporary support to these beams and reconnect after beam between has been lowered.
2. Remove exist. connection fittings after beam has been lowered.

LICENSED PROFESSIONAL ENGINEER
LESLIE E. ROBERTSON
No 34360
UNIVERSITY OF THE STATE OF NEW YORK

R

GNED

DRAWN
Adams

REVIEWED

19-K-1039.1

SKILLING, HELLE, CHRISTIANSEN, ROBERTSON — Structural & Civil Engineers

PROJECT: THE WORLD TRADE CENTER | TITLE: STEEL BEAM REPAIR AT EL 310'-2" ZONE K-5 | DATE: 1-15-71

REVISIONS

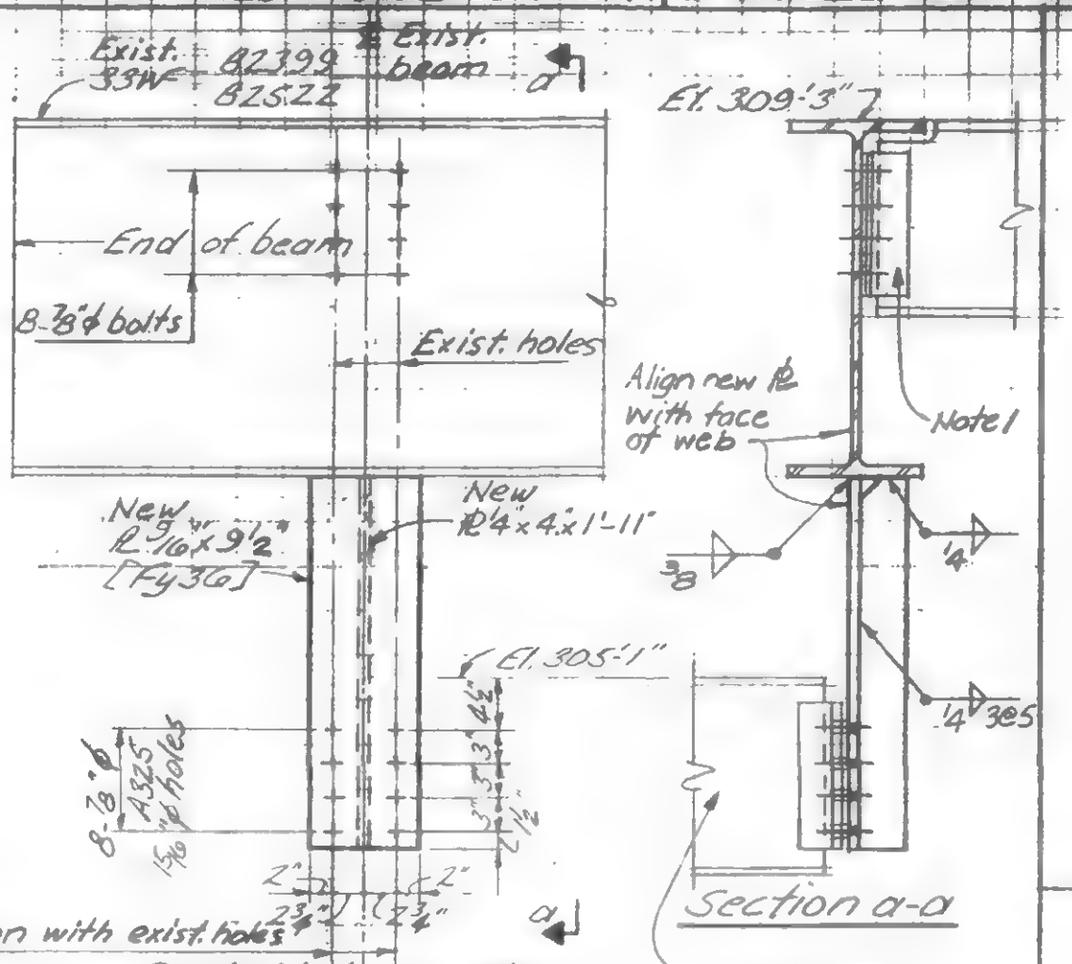

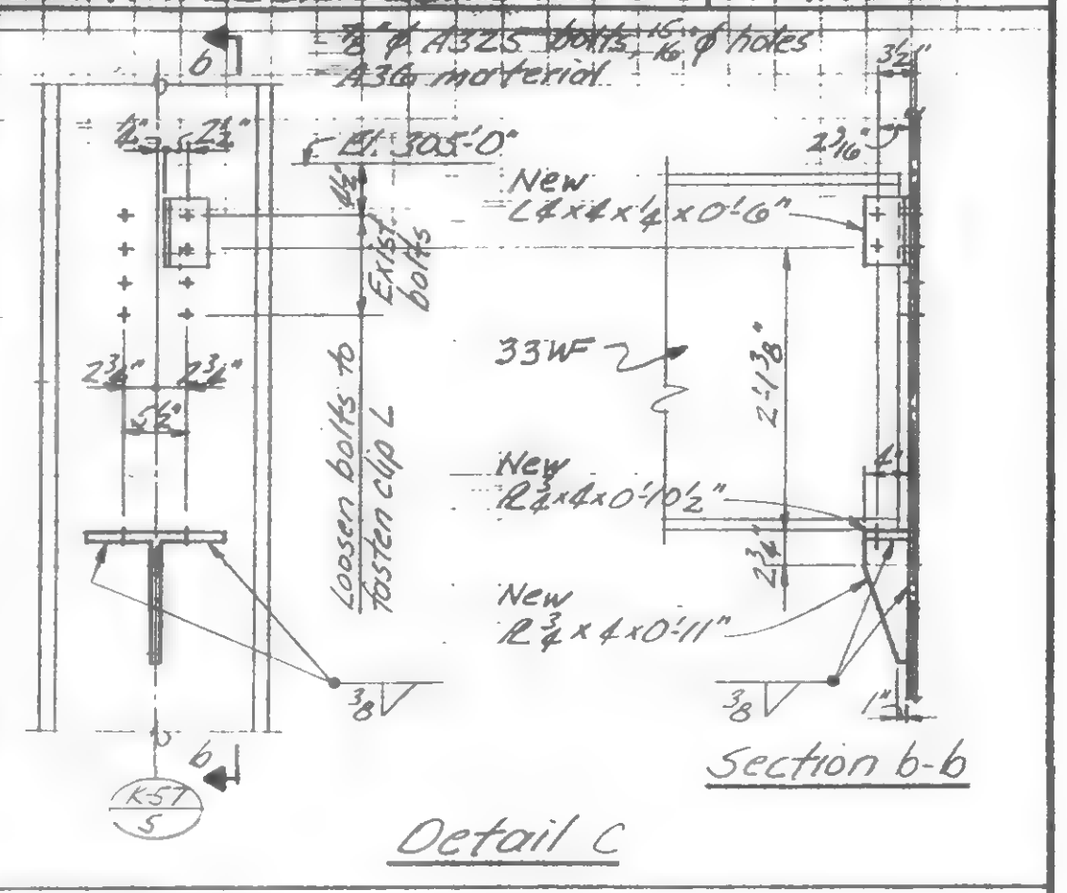

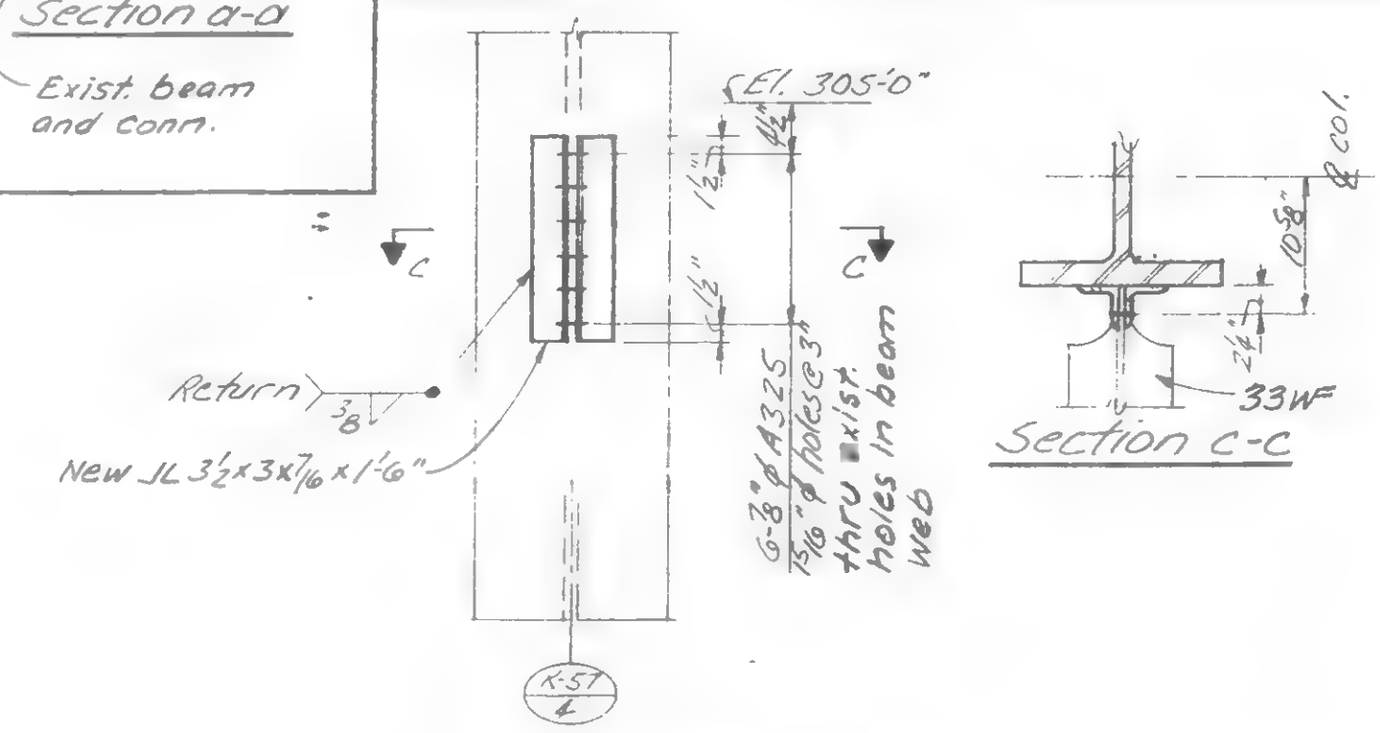

LICENSED PROFESSIONAL ENGINEER — LESLIE E. ROBERTSON — No. 34360 — UNIVERSITY OF THE STATE OF NEW YORK

R

DESIGNED

DRAWN J. Adams

REVIEWED

19-K-1039.2

SKILLING, HELLE, CHRISTIANSEN, ROBERTSON — Structural & Civil Engineers

PROJECT: THE WORLD TRADE CENTER

TITLE: REMOVING OF TEMPORARY GIRDERS AT EXPANSION JOINTS.

DATE: 1-14-71

REVISIONS

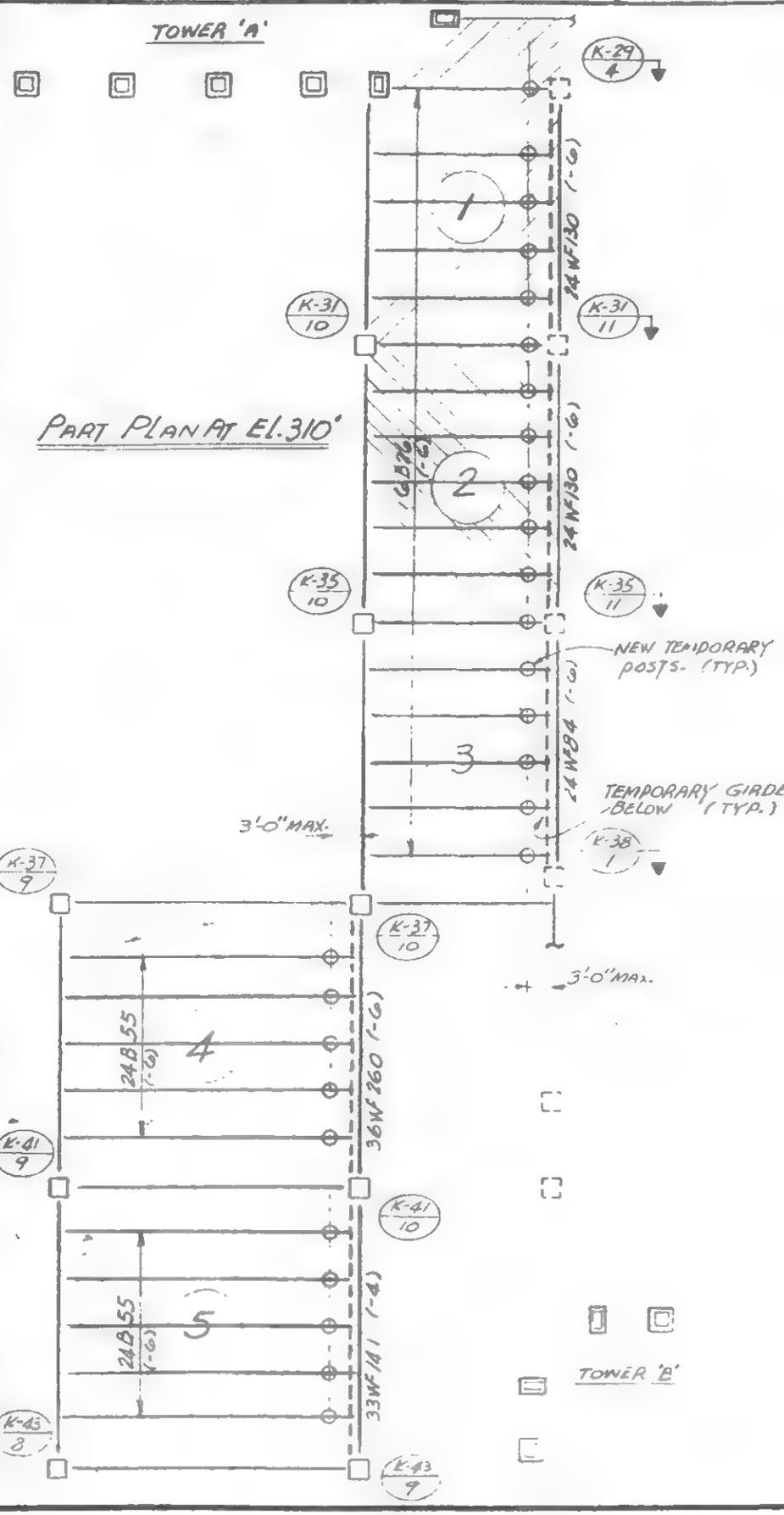

PART PLAN AT El.310'

WORK PROCEDURE

(See also details on 12-JK3-7, 8, 10 and 8-JK5-14.3)

1. Remove "Work Platform" over any one or more of the designated areas (1 thru 5) where temporary girders are planned to be removed. Restrict the same area or areas from any possible traffic movements besides an occasional Live Load of not more than 20 psf. This restriction shall not be lifted until after closing of the expansion joints as described on 8-JK5-14.3 and 12-JK3-7.

2. Shore all beams presently supported by the temporary girder or girders to be removed.

3. Remove temporary girder or girders as shown on 12-JK3-7.

   Follow Detail "B" if an adjacent girder is <u>not</u> planned to be removed. (This applies only to girders along side of 24WF between column K29-4 and K38-1).

4. If required, post under any one of the beams may be removed, provided, an angle seat connection as shown on Detail "a" is furnished.

LICENSED PROFESSIONAL ENGINEER — LESLIE E ROBERTSON — No 34360 — UNIVERSITY OF THE STATE OF NEW YORK

SIGNED: L.

DRAWN: E.L.

REVIEWED:

19-K-1040.1 of 2

SKILLING, HELLE, CHRISTIANSEN, ROBERTSON — Structural & Civil Engineers

PROJECT: THE WORLD TRADE CENTER | TITLE: REMOVING OF TEMPORARY GIRDERS AT EXPANSION JOINTS | DATE: 1-14-71

REVISIONS

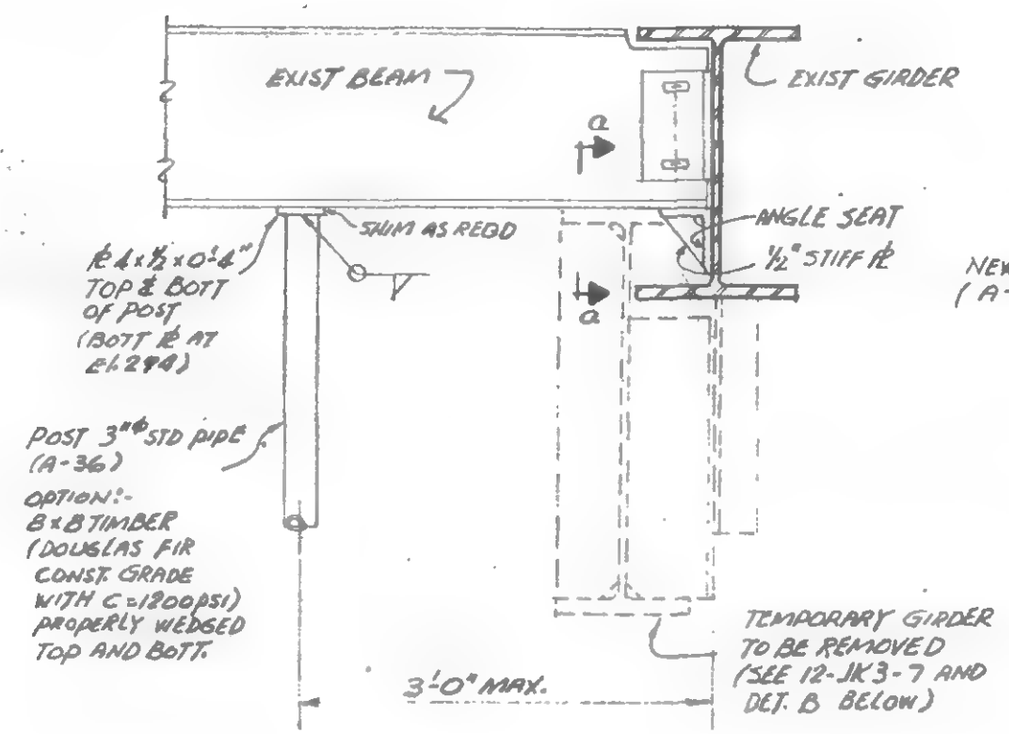

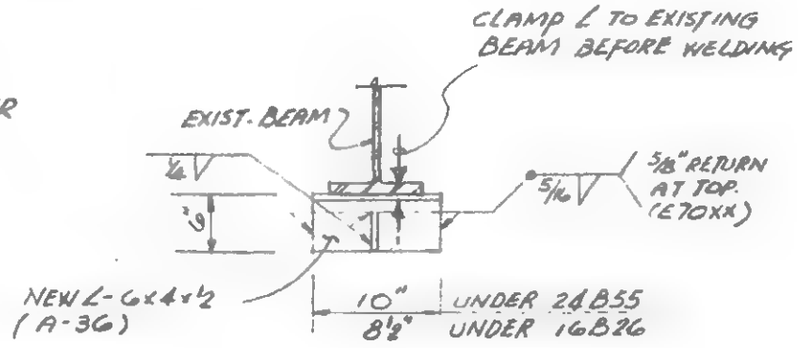

SECTION a-a

(SAME DETAIL AT COLUMN LINE)

DETAIL 'A'

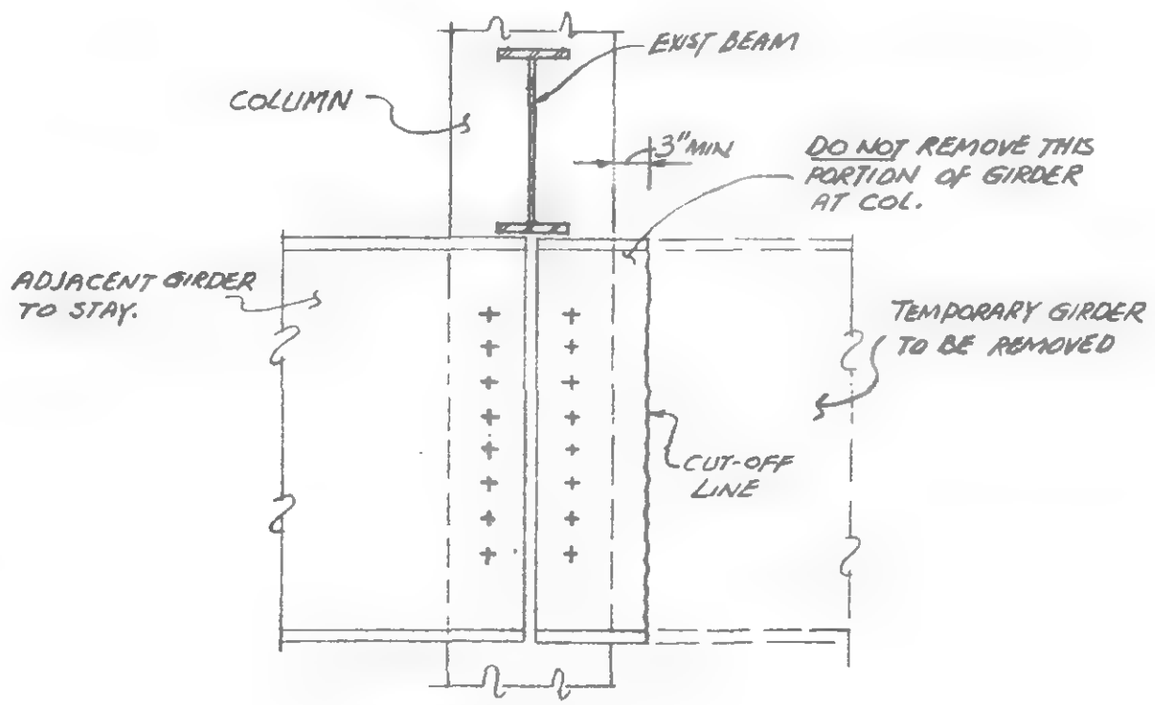

DETAIL 'B'

LICENSED PROFESSIONAL ENGINEER LESLIE E. ROBERTSON No. 34580 UNIVERSITY OF THE STATE OF NEW YORK

VERIFIED E.L.

DRAWN E.L.

REVIEWED

19-K-1040.2 of 2

THE WORLD TRADE Corp.

REVISIONS

7/24/71

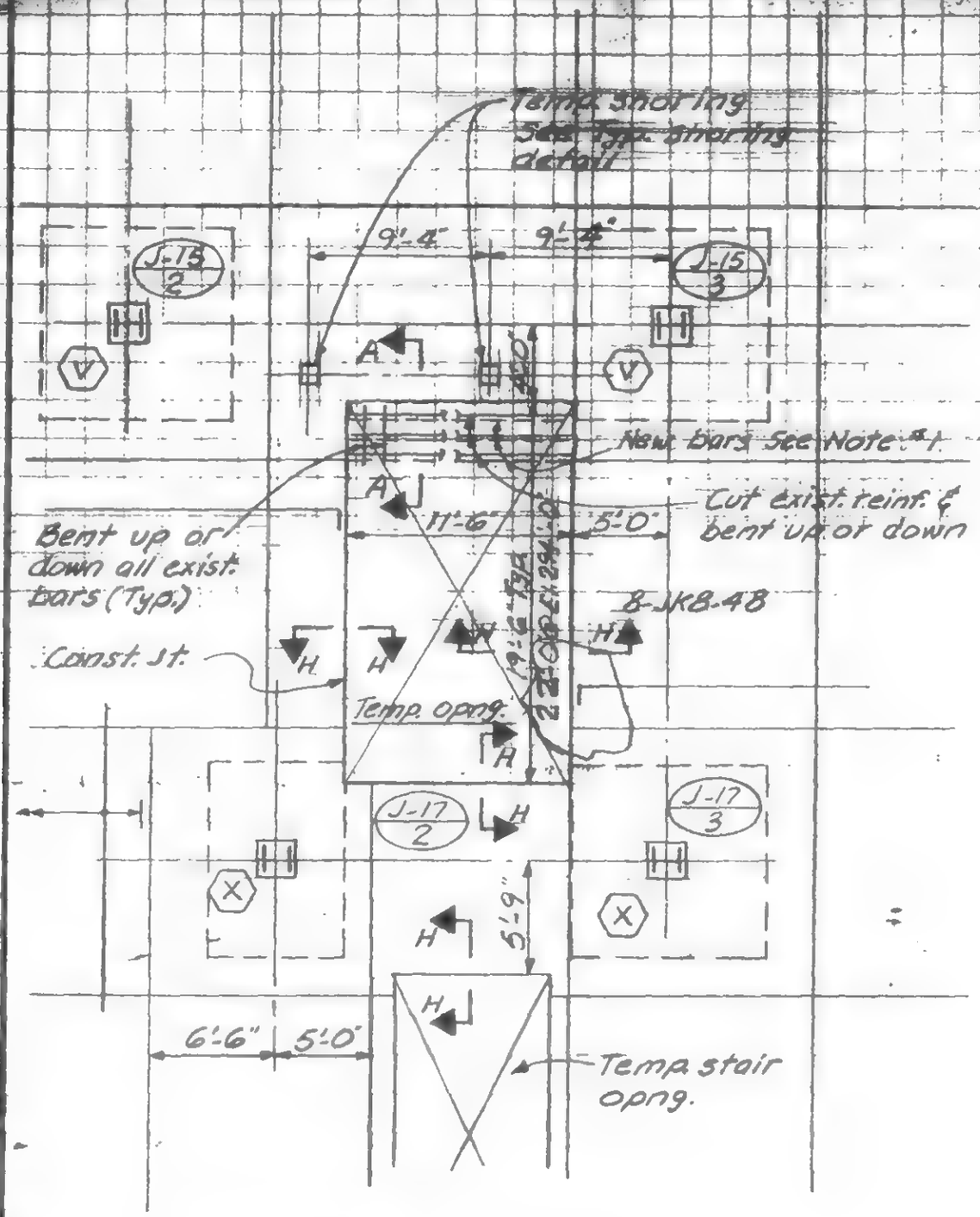

Part Plan

El. 294, 284, 274, 264 & 253

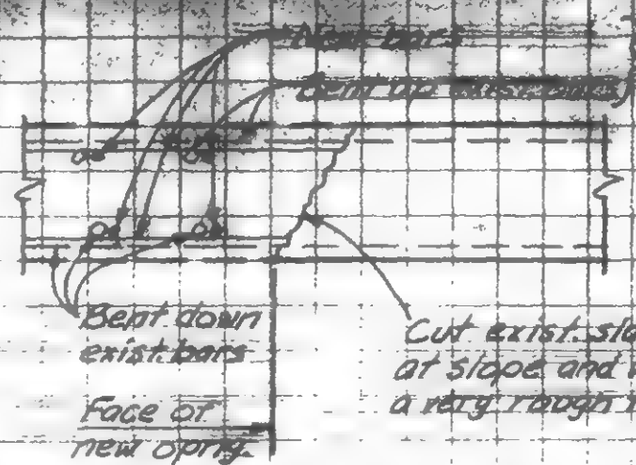

Section A-A

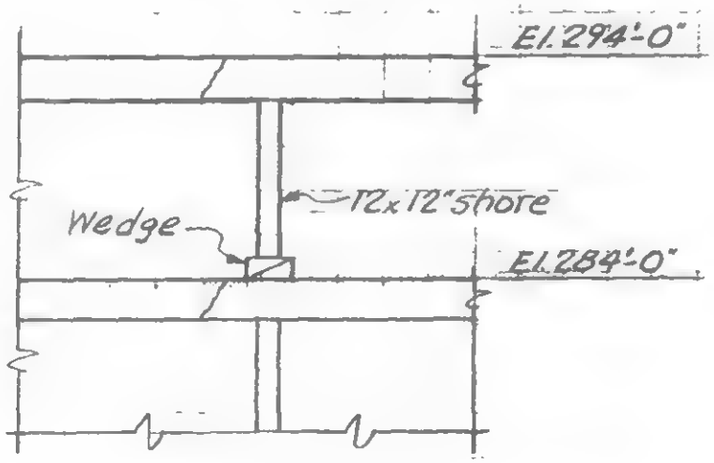

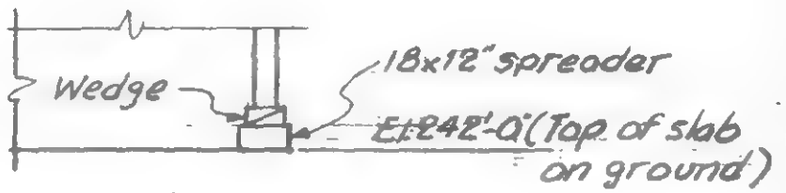

Typical Shoring Detail

Note #1

When temporary opening is poured, strighten up all existing bars and provide new add. reinf. of bars sizes same as existing.

LICENSED PROFESSIONAL ENGINEER
LESLIE E. ROBERTSON
No. 34360
UNIVERSITY OF THE STATE OF NEW YORK

DESIGNED M. RAMANI

DRAWN I. FRANQUI

REVIEWED

19-JK-1045

SKILLING HELLE CHRISTIANSEN ROBERTSON

PROJECT [illegible] TITLE LOCATION OF [illegible] DATE [illegible]

REVISIONS

(CHANGE No. 564.025-21)

Reference: Letter PNYA to SHCR on 9-8-71

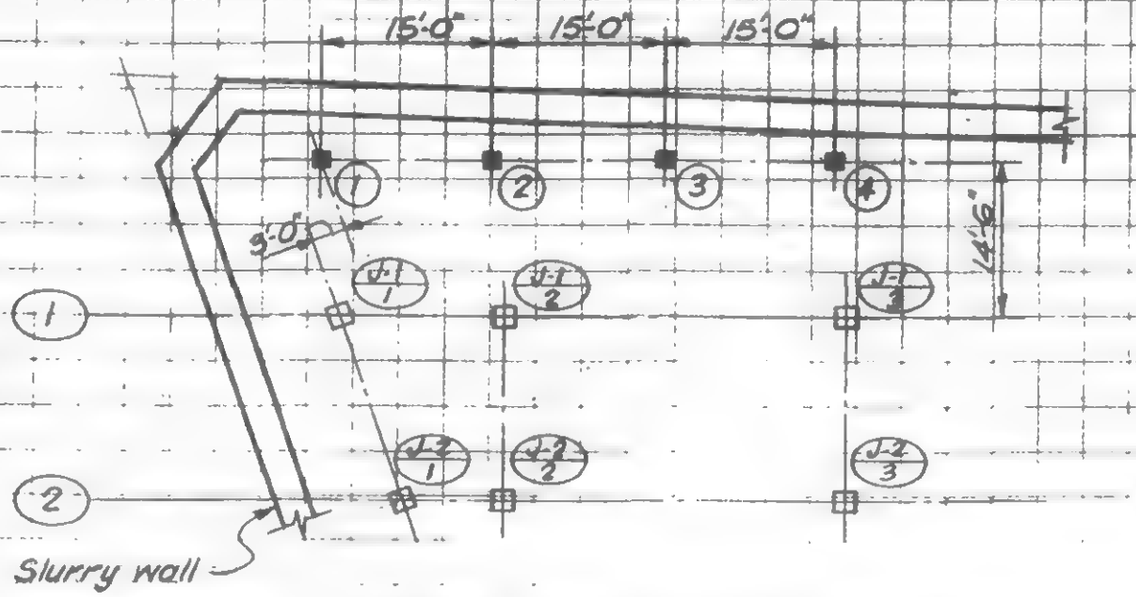

PART PLAN AT NW CORNER
('16" = 1'-0")

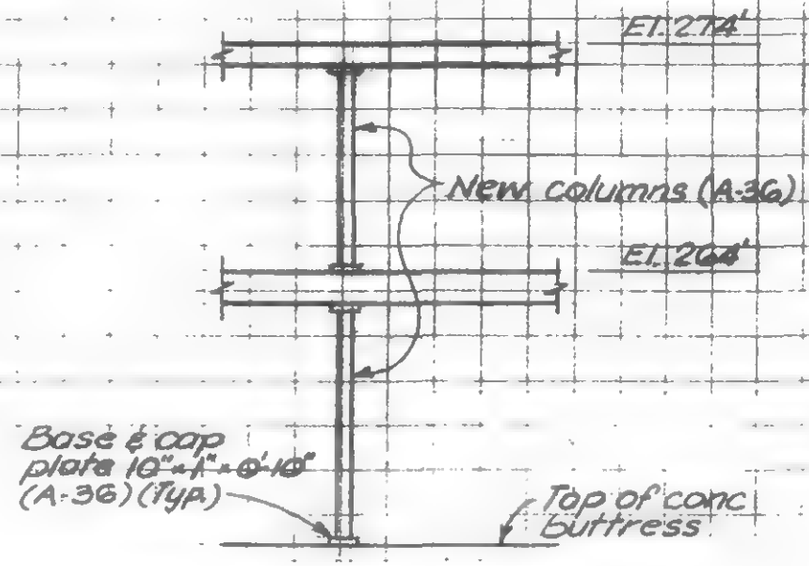

SECTION
('8" = 1'-0")

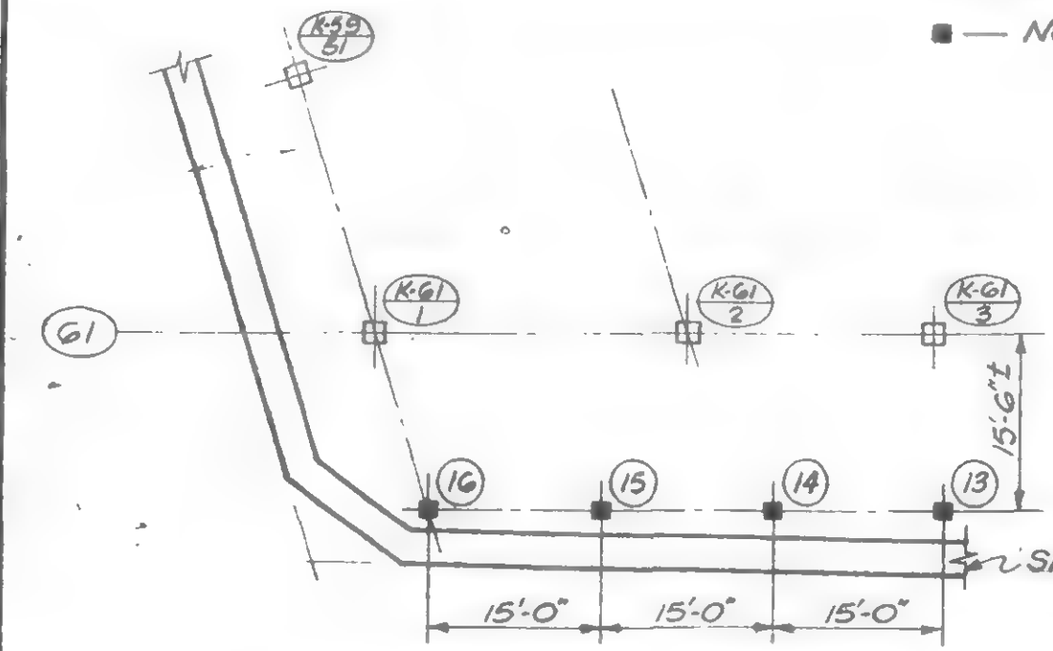

PART PLAN AT SW CORNER
('16" = 1'-0")

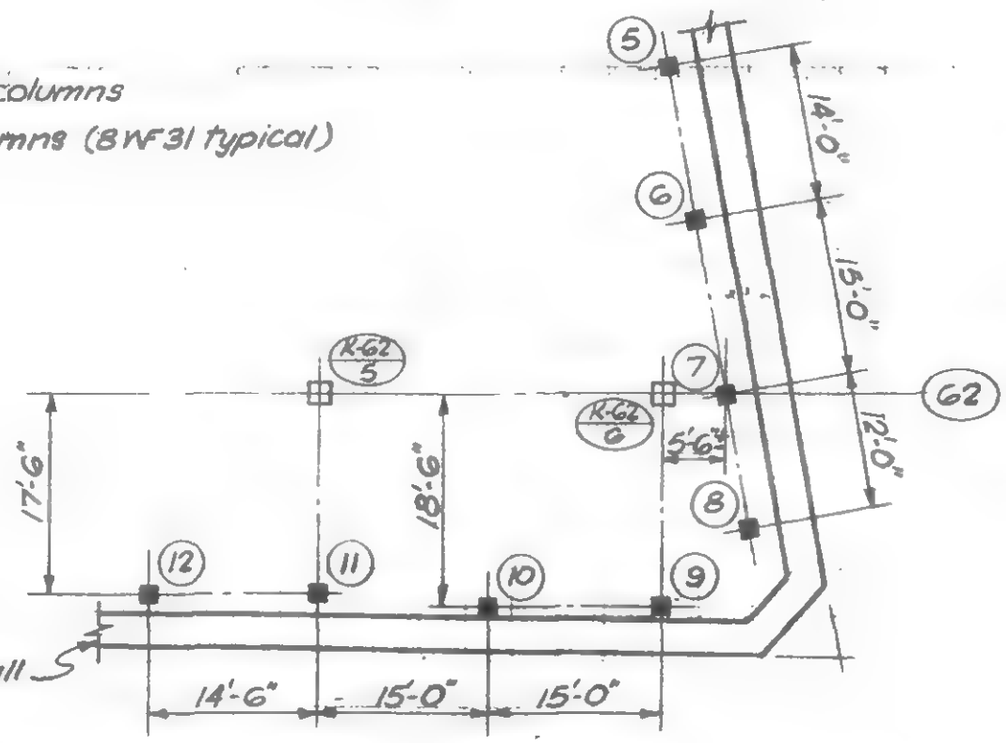

PART PLAN AT SE CORNER
('16" = 1'-0")

DRAWN SC

REVIEWED

19-JK-1046

SKILLING, HELLE, CHRISTIANSEN, ROBERTSON — Structural & Civil Engineers

PROJECT: THE WORLD TRADE CENTER | TITLE: PLAZA LEVEL SECTIONS K-1 | DATE: 10-7-71

REVISIONS

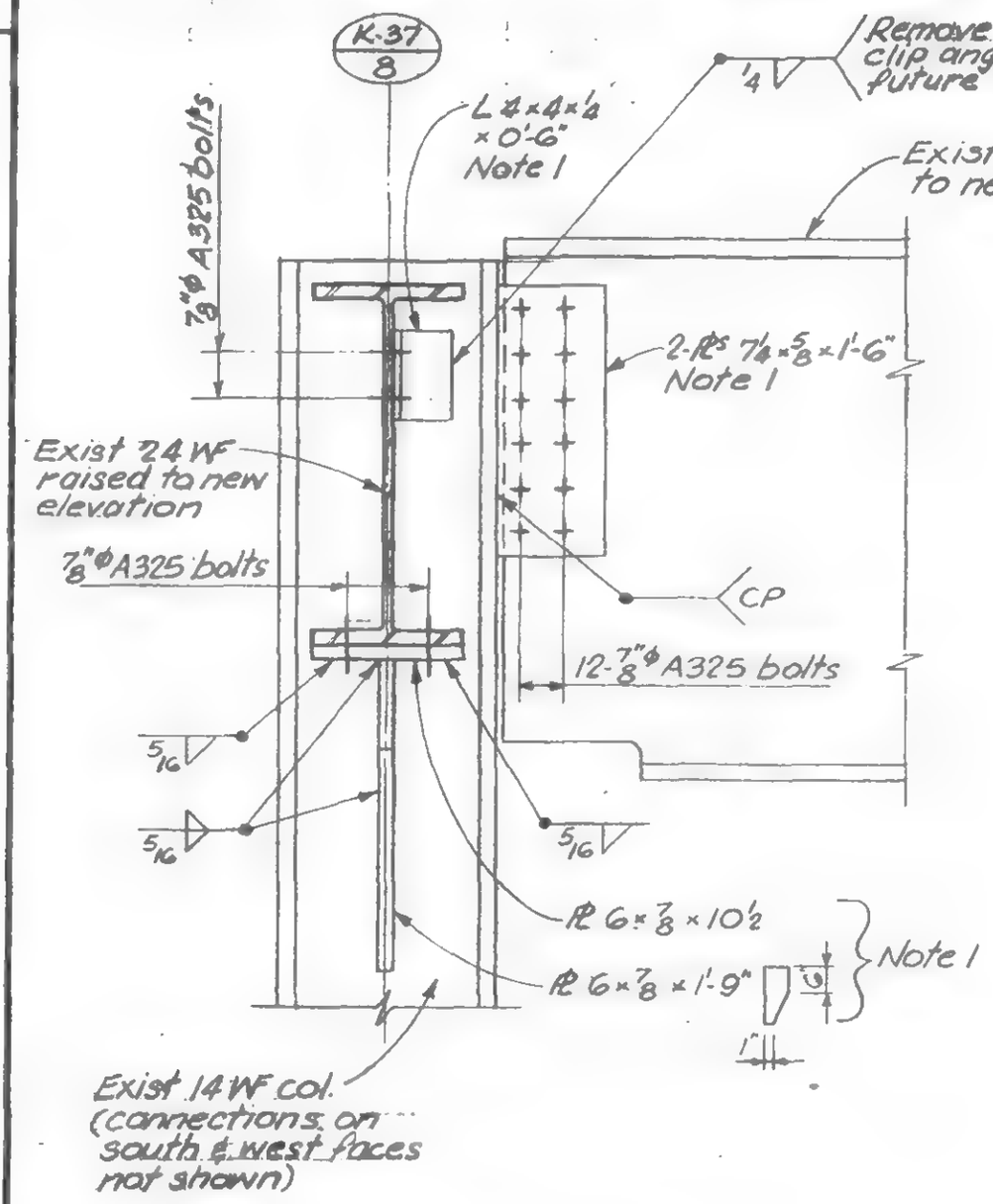

Detail A

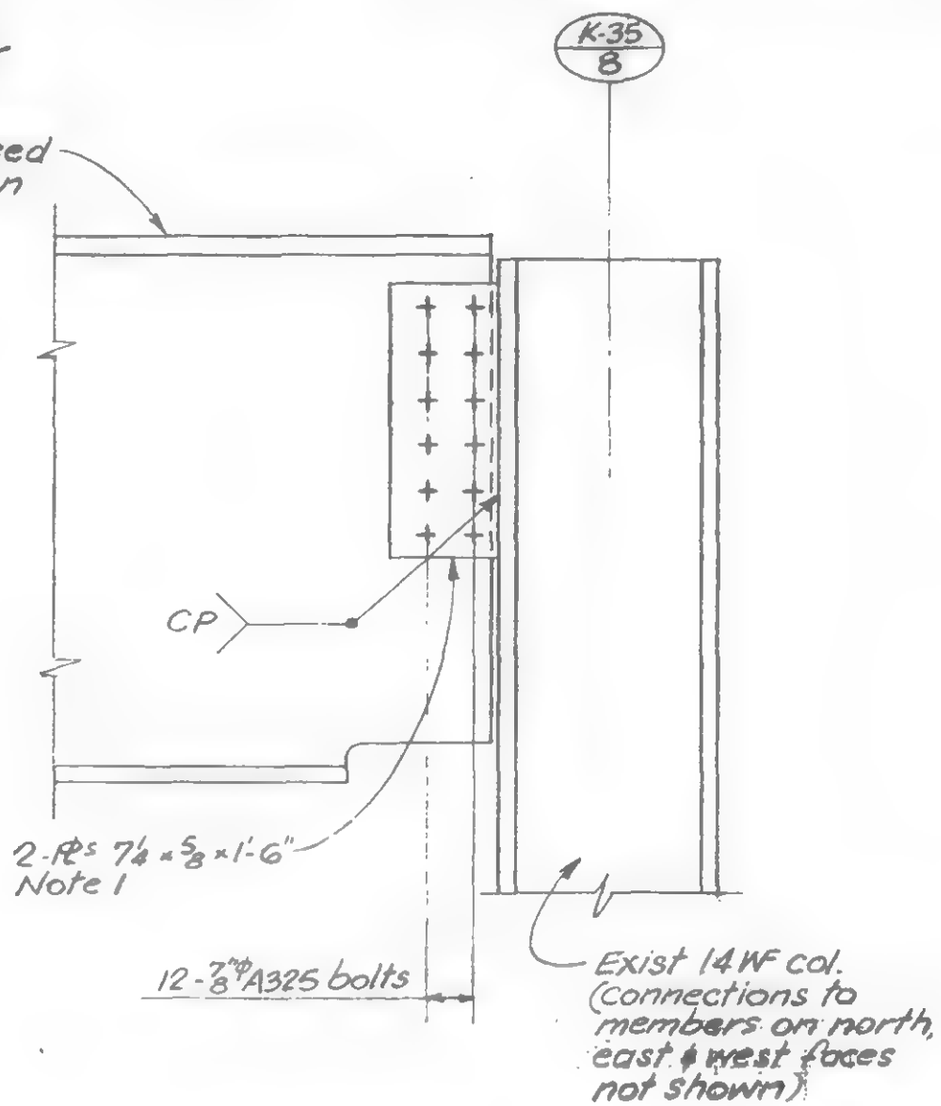

Detail B

Note 1: Remove existing connection and reuse material in new location if in satisfactory condition. Bolts must be new material.

LICENSED PROFESSIONAL ENGINEER — LESLIE E. ROBERTSON — No. 34360 — UNIVERSITY OF THE STATE OF NEW YORK

SIGNED: HR
DRAWN: SC
REVIEWED:

19-K-1047.1

SKILLING HELLE CHRISTIANSEN ROBERTSON Structural & Civil Engineers	PROJECT WORLD TRADE INFORMATION	DATE 10-4-71	Sheet No.
	332' LEVEL DWG SK-104	PREPARED BY HDK	
		APPROVED	

19-K-1047 DET D.

24WF120 (330'-6) to 36WF245 (329'-4") 125k

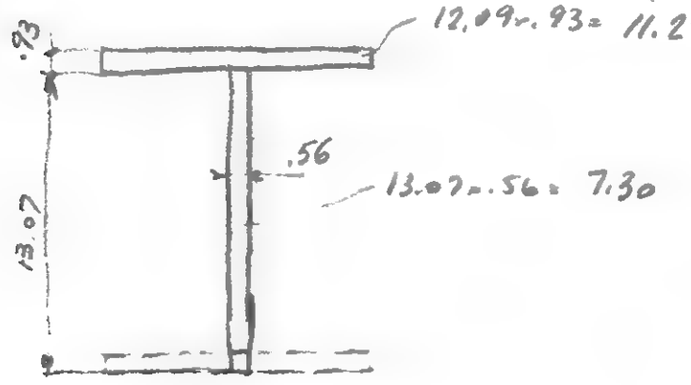

11.22 × .46 = 5.16
7.30 × 7.47 = 54.5
18.52 | 59.7
C.g = 3.22
14 − 3.22 = 10.78

7.30 × (13.07)²/12 = 103.7
11.22 × (2.76)² = 85.5
7.30 × (4.25)² = 131.8
I = 320.9

S = 320.9/10.78 = 29.8

M = 125 × 9.25 = 1152
S_{req} = 1152/25 = 46 Fy42 1152/22 = 52.4 Fy36

NG

REINF REQ'D

Try 12 × ½" A = 11.44 × 0.5 = 5.72

18.52 × 3.22 = 59.7
5.72 × 13.75 = 78.5
24.24 | 138.2
C.g. 5.7
14 − 5.7 = 8.3

I

320.9
18.52 × (2.48)² = 114.
5.72 × (8.05)² = 370
805.

S = 805/8.3 = 97 > 52.4 OK

SHEAR 125/(13.5 × .56) = 16.5 < 17.0 OK

Vaq/I = 125 × 6 × 8.05/805 = 7.5 k/in

DEVELOPMENT

6 in² @ 20000 KSI / 2 × 8.4 + 2 × 5.6 = L = 4.7

EXTEND 1'-2"

USE ½ = 14 × 5.6 × 20

SKILLING, HELLE, CHRISTIANSEN, ROBERTSON — Structural & Civil Engineers

PROJECT: THE WORLD TRADE CENTER | TITLE: PLAZA LEVEL SECTIONS K-1 | DATE: 10-7-71

REVISIONS

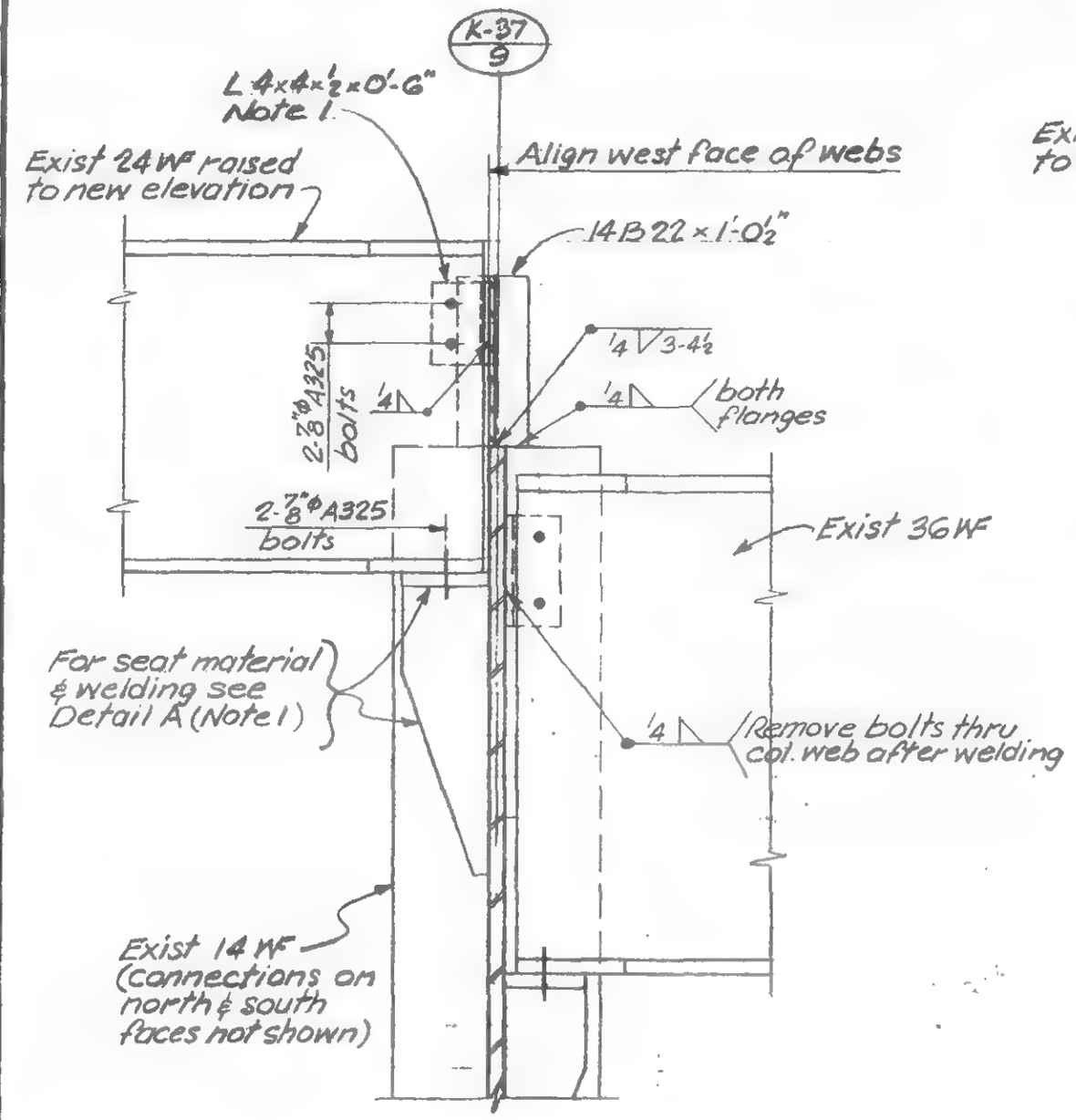

Detail C

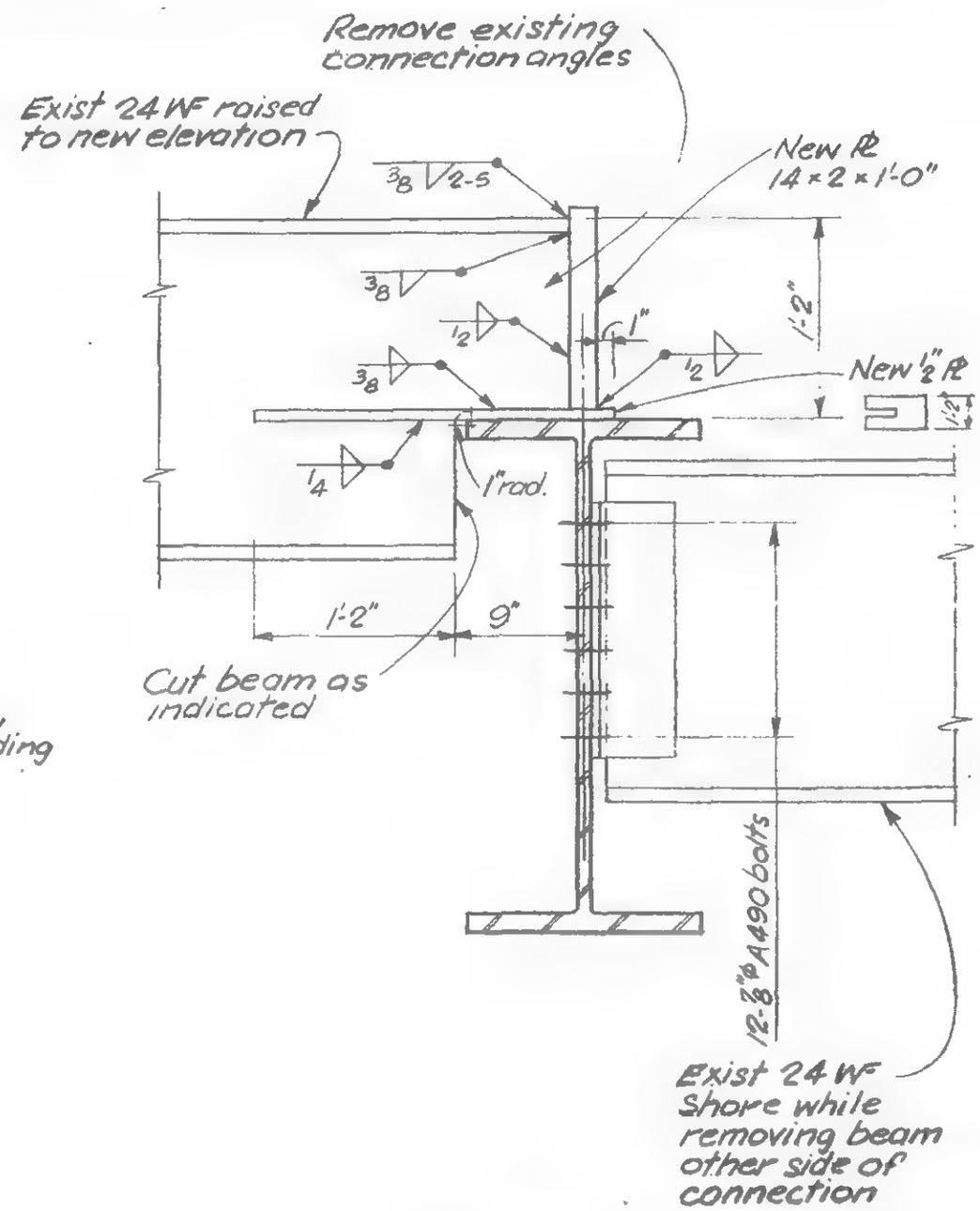

Detail D

LICENSED PROFESSIONAL ENGINEER — LESLIE E. ROBERTSON — No. 34360 — UNIVERSITY OF THE STATE OF NEW YORK

DESIGNED: HR
DRAWN: SC
REVIEWED:

19-K-1047.2

SKILLING, HELLE, CHRISTIANSEN, ROBERTSON — Structural & Civil Engineers

PROJECT: THE WORLD TRADE CENTER | TITLE: KEY PLAN FOR LOCATION OF LEGS — CALDER STABILE | DATE: 10-1-71

REVISIONS

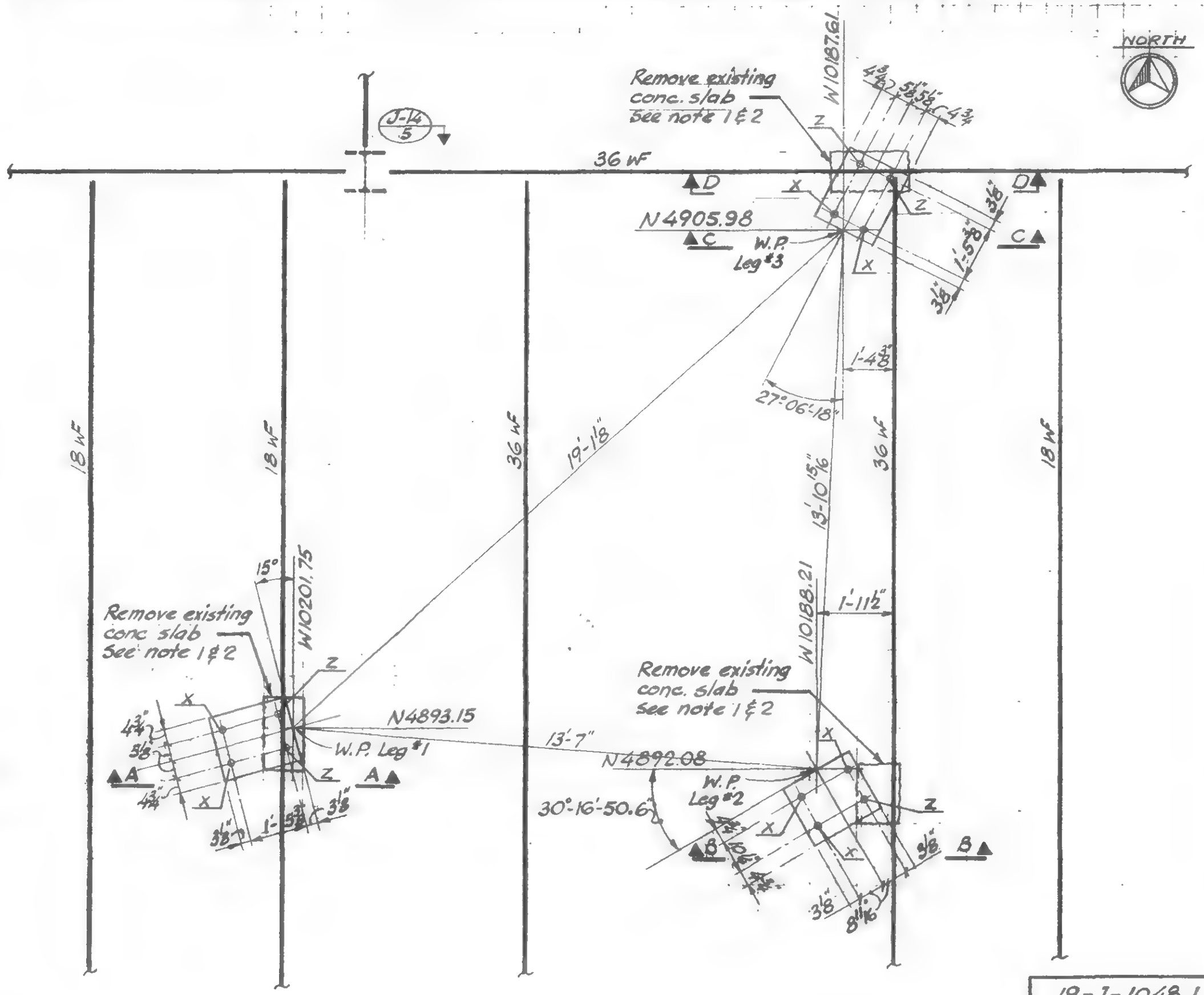

LICENSED PROFESSIONAL ENGINEER — LESLIE E. ROBERTSON — NO 34360 — UNIVERSITY OF THE STATE OF NEW YORK

DESIGNED

DRAWN

REVIEWED

19-J-1048.1

SKILLING, HELLE, CHRISTIANSEN, ROBERTSON — Structural & Civil Engineers

PROJECT: THE WORLD TRADE CENTER | TITLE: SECTIONS - CALDER STABILE | DATE: 10-1-74

REVISIONS

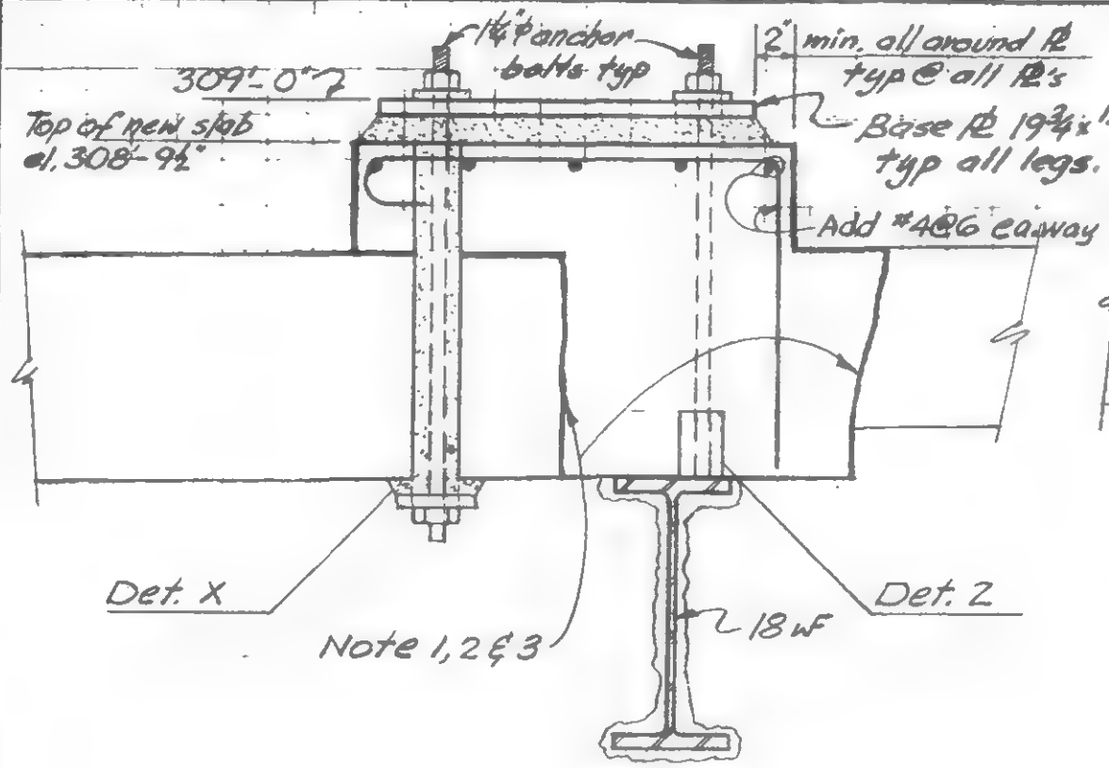

Section A-A

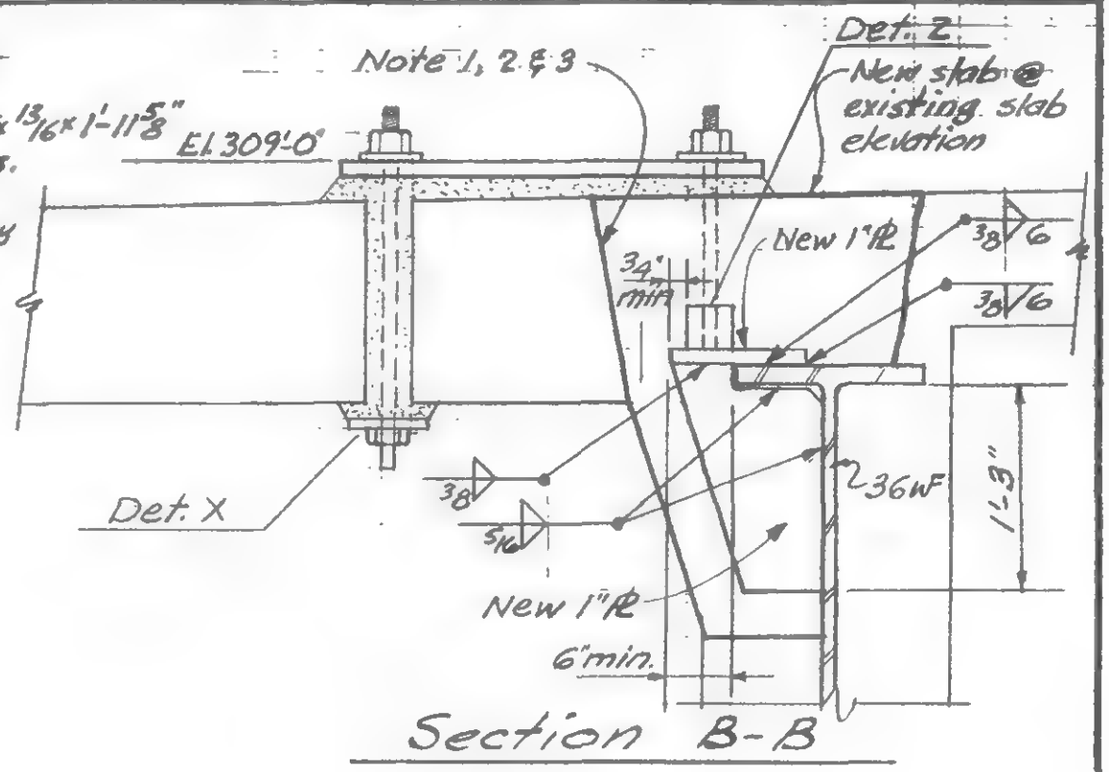

Section B-B

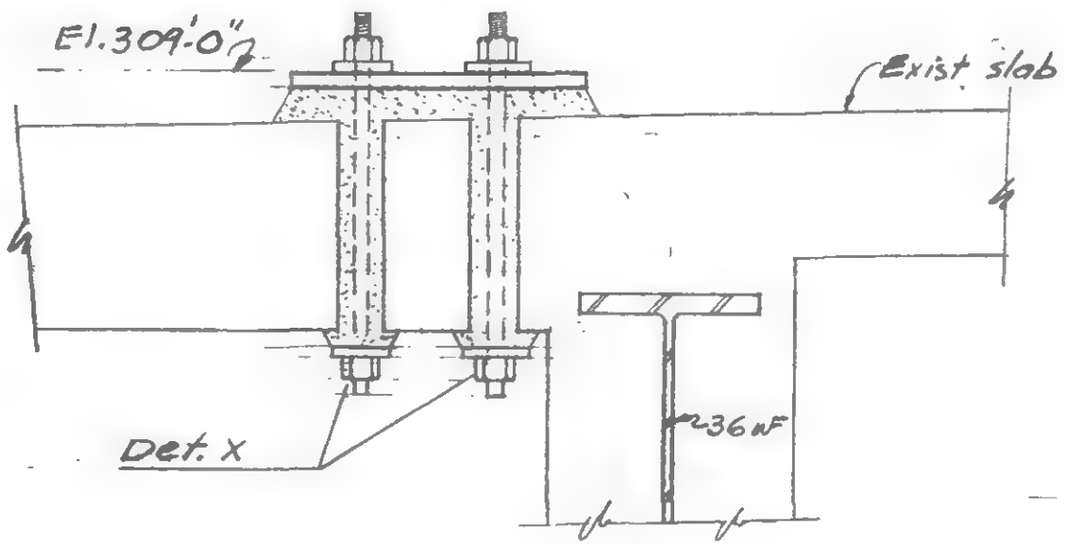

Section C-C

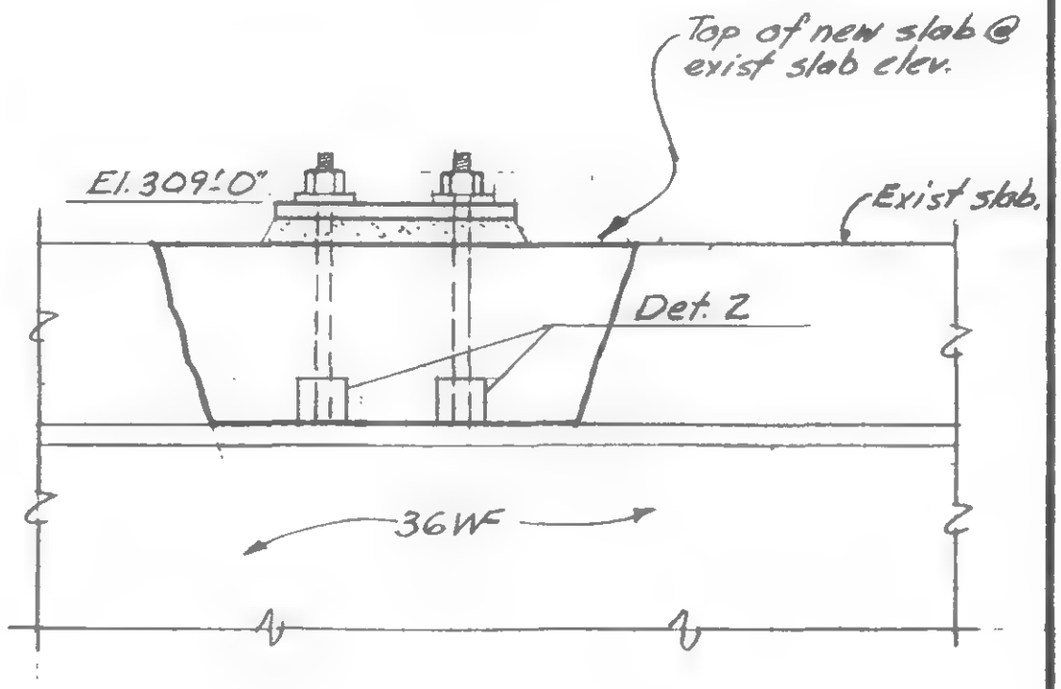

Section D-D

LICENSED PROFESSIONAL ENGINEER — LESLIE E. ROBERTSON — No. 34360 — UNIVERSITY OF THE STATE OF NEW YORK

DESIGNED

REVIEWED

19-J-1048.2

SKILLING, HELLE, CHRISTIANSEN, ROBERTSON — Structural & Civil Engineers

PROJECT: THE WORLD TRADE CENTER | TITLE: NOTES & DETAILS – CALDER STABILE | DATE: 10-1-71

REVISIONS

Notes:

1. Remove existing concrete slab, without damaging existing reinforcement.
2. Remove exist concrete at slope (as shown in sections) and with very rough surface.
3. Prior to casting a new slab, all exist surfaces shall be completely coated with approved epoxy bonding compound.
4. All new concrete shall be approved "non shrinkage" type $f'_c = 4000$ psi.
5. All the work shall be carried out according to the Project specifications.
6. Location of legs and other detail are as supplied by the PNYA sketch SK-C55-0, SK-C55-1, 2 & 3 dated 5-10-71
7. All field welds shall be made with E70xx electrodes.
8. All washers shall be PL 4"x1"x0'-4" (A36) with 15/16"ϕ hole.

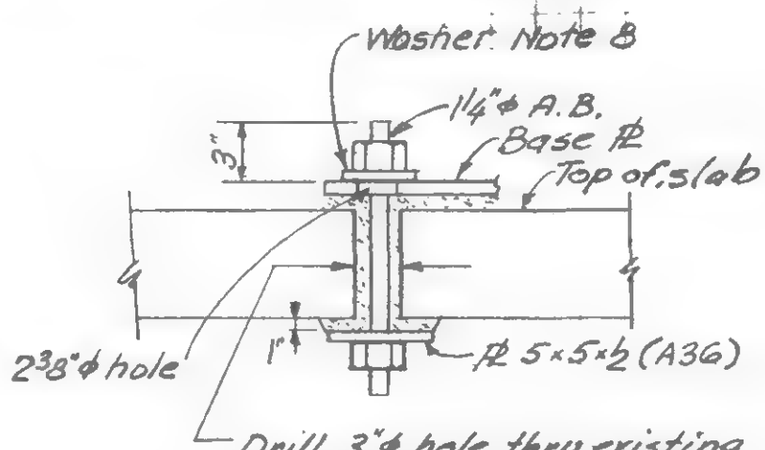

Detail X

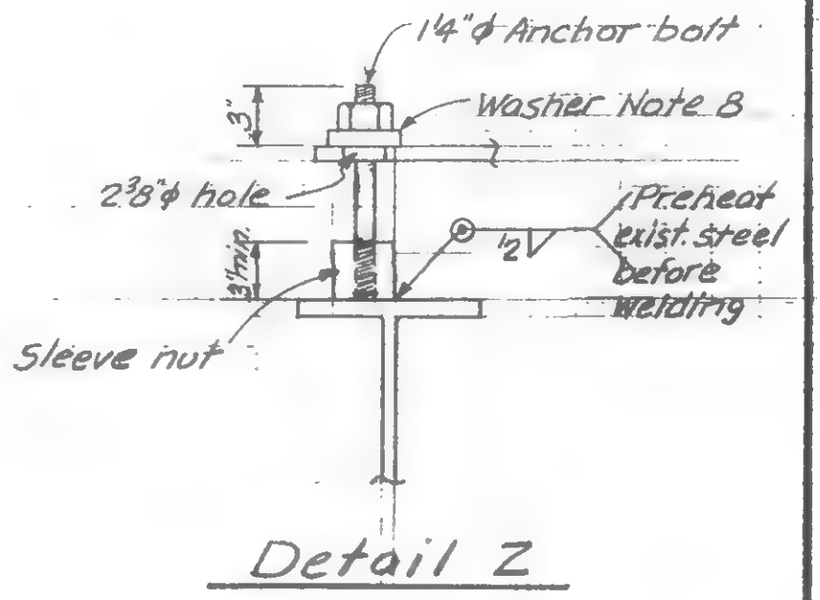

Detail Z

LICENSED PROFESSIONAL ENGINEER — LESLIE E. ROBERTSON — No 34360 — UNIVERSITY OF THE STATE OF NEW YORK

DESIGNED

DRAWN

REVIEWED

19-J-1048.3

SKILLING, HELLE, CHRISTIANSEN, ROBERTSON — Structural & Civil Engineers

PROJECT THE WORLD TRADE CENTER | TITLE SECTIONS - El. 310 STAIR #4 | DATE 10-29-71

REVISIONS

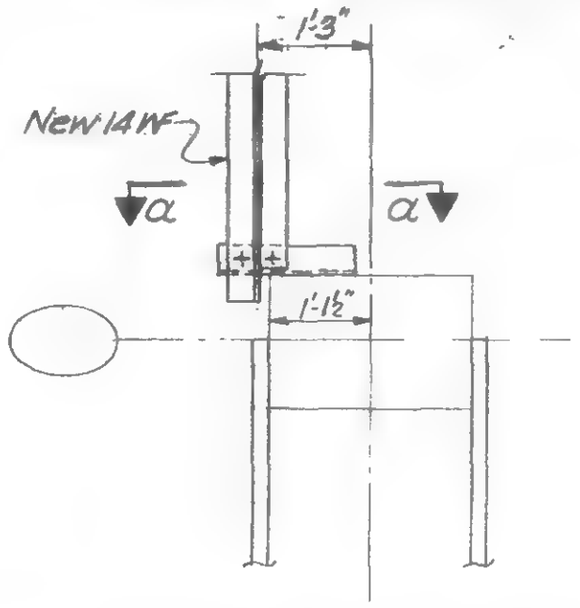

Detail 1049 A

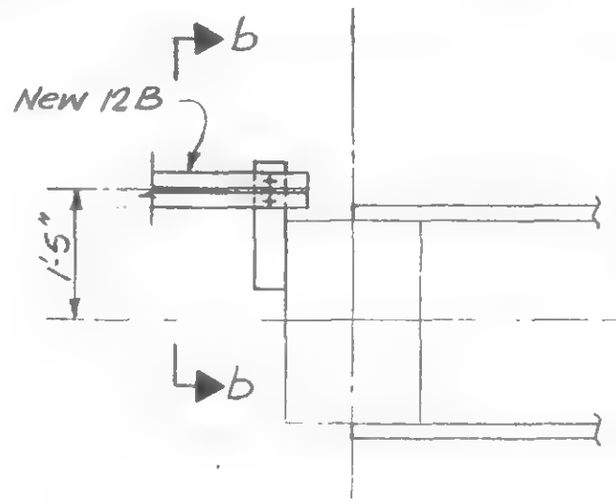

Detail 1049 B

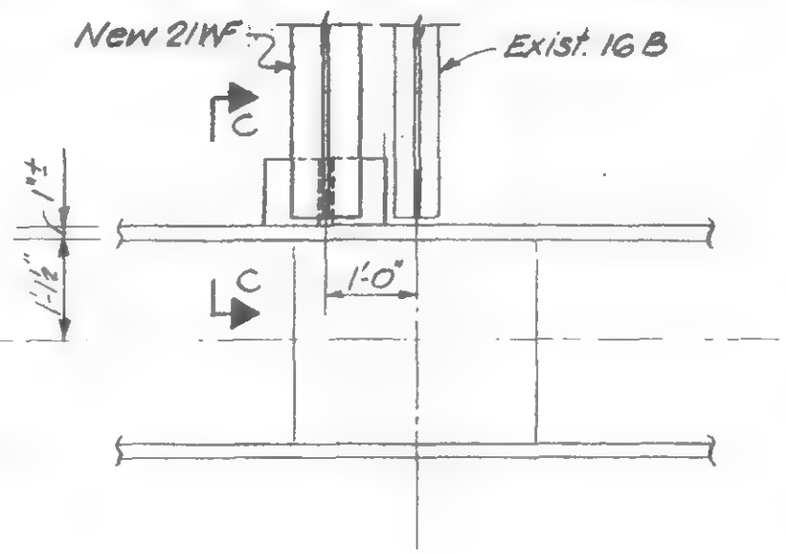

Detail 1049 C

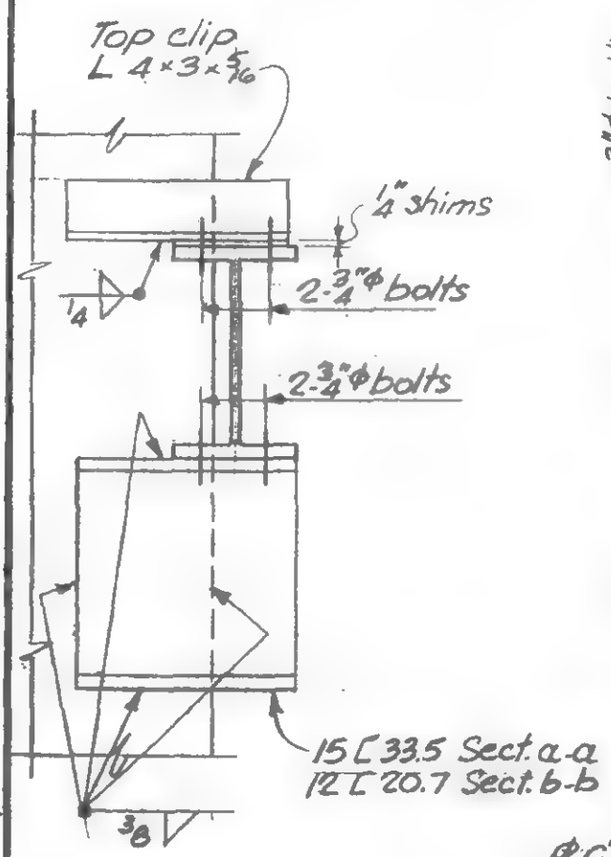

Section a-a

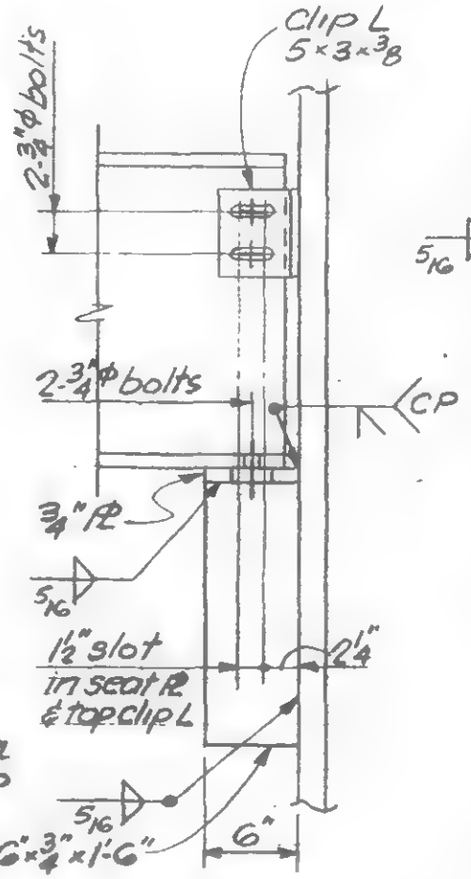

Section c-c

Section b-b opp. hand & as noted

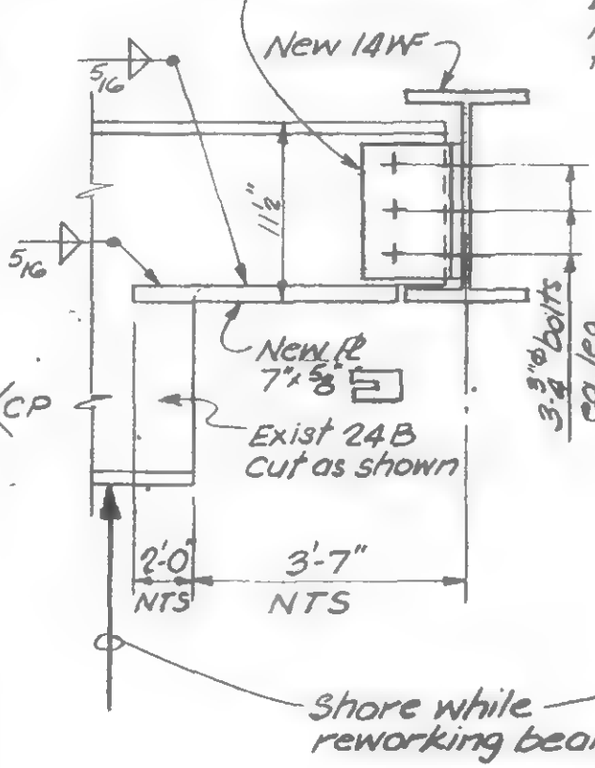

Detail 1049 D

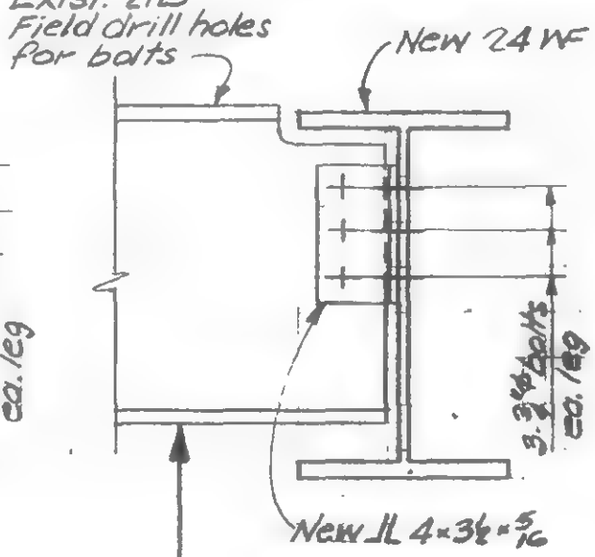

Detail 1049 E

LICENSED PROFESSIONAL ENGINEER
LESLIE E. ROBERTSON
No. 34960
UNIVERSITY OF THE STATE OF NEW YORK

SIGNED

DRAWN SC

REVIEWED

19-K-1049

SKILLING, HELLE, CHRISTIANSEN, ROBERTSON — Structural & Civil Engineers

PROJECT THE WORLD TRADE CENTER | TITLE SECTIONS - EL 310 STAIR #4 | DATE 10-29-71

REVISIONS

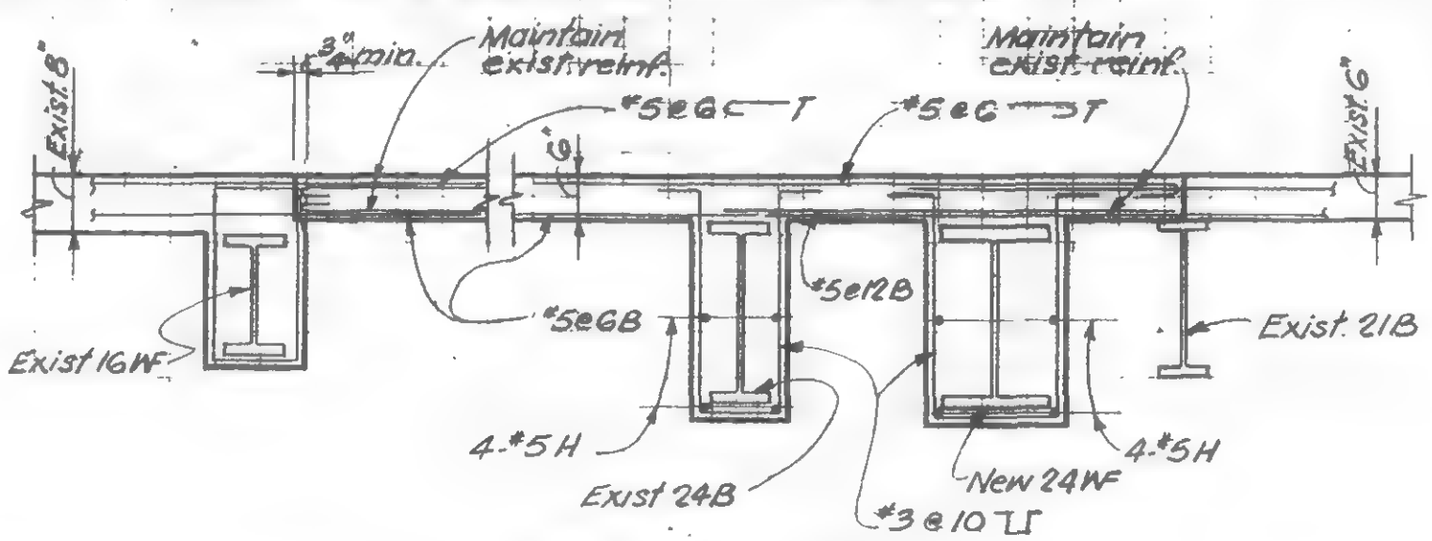

Section A-A

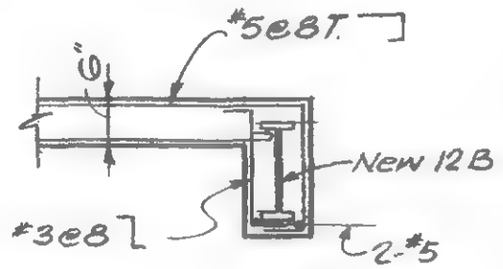

Section C-C

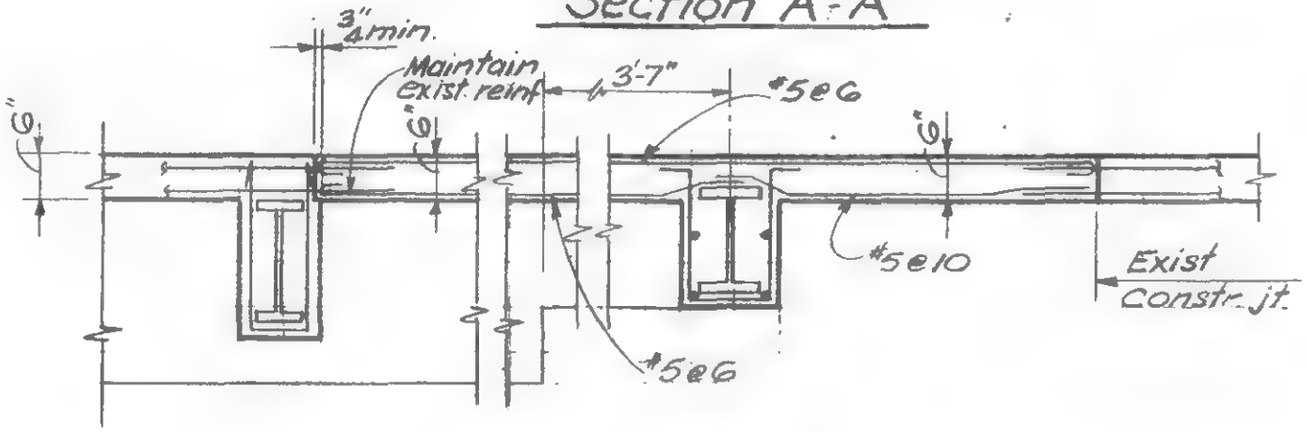

Section B-B

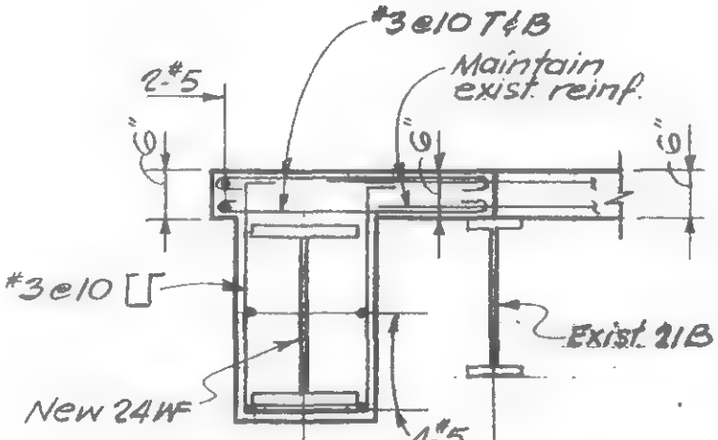

Section D-D

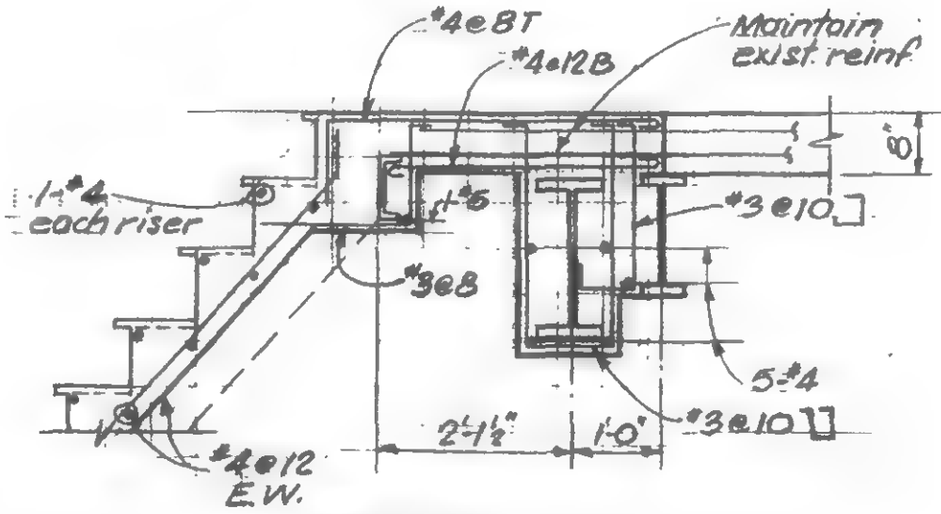

Section F-F

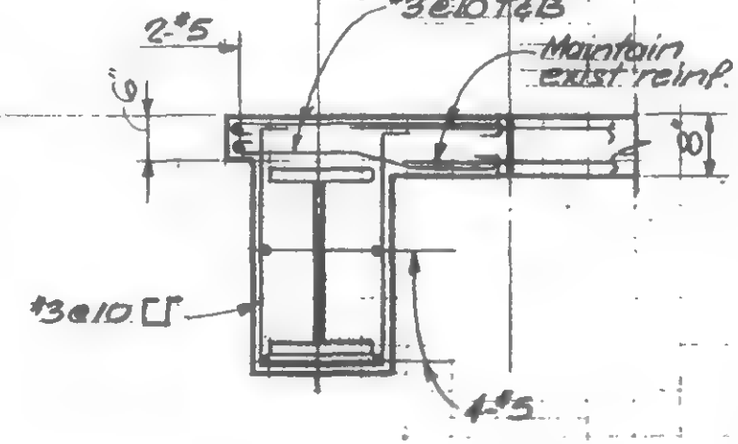

Section E-E

LICENSED PROFESSIONAL ENGINEER — LESLIE E. ROBERTSON — No. 34980 — UNIVERSITY OF THE STATE OF NEW YORK

DESIGNED

DRAWN S.C.

REVIEWED

19-K-1050

SKILLING, HELLE, CHRISTIANSEN, ROBERTSON — Structural & Civil Engineers

PROJECT: ~~THE WORLD TRADE CENTER~~ | TITLE: ~~EMERGENCY GENERATOR PLATFORM - EL 246'6" JS&KJ~~ | DATE: 12-2-71

REVISIONS

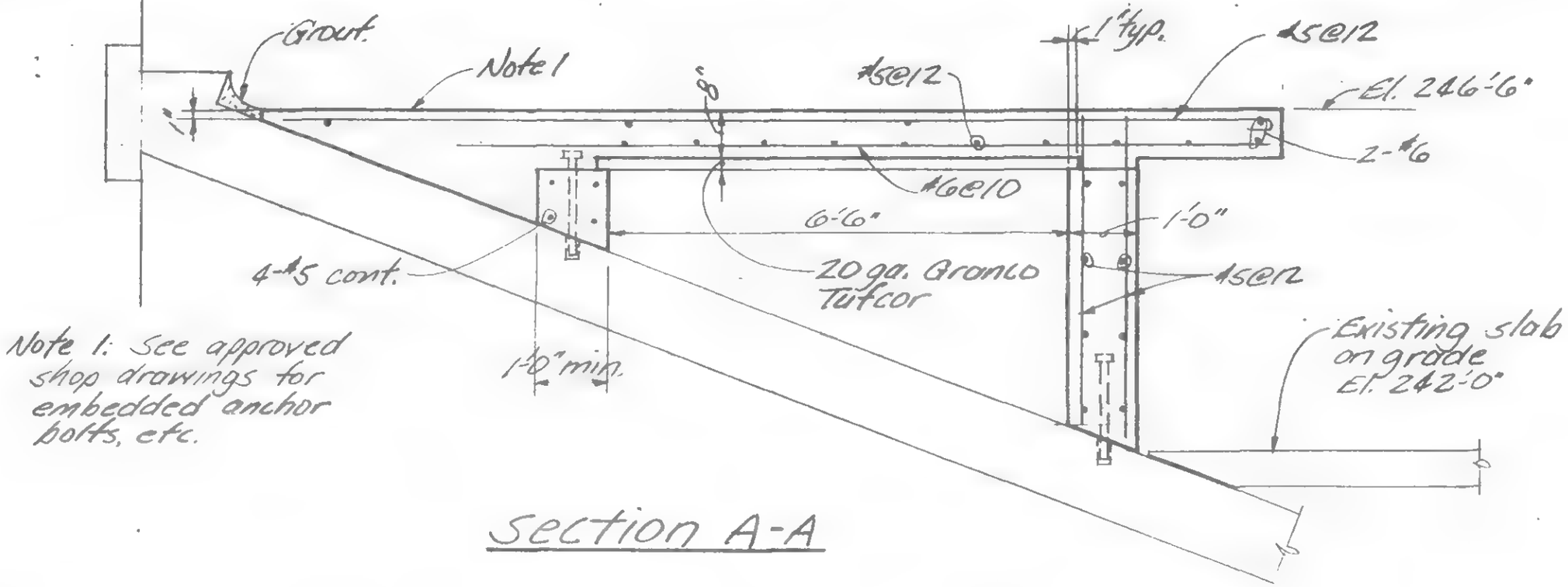

Note 1: See approved shop drawings for embedded anchor bolts, etc.

Section A-A

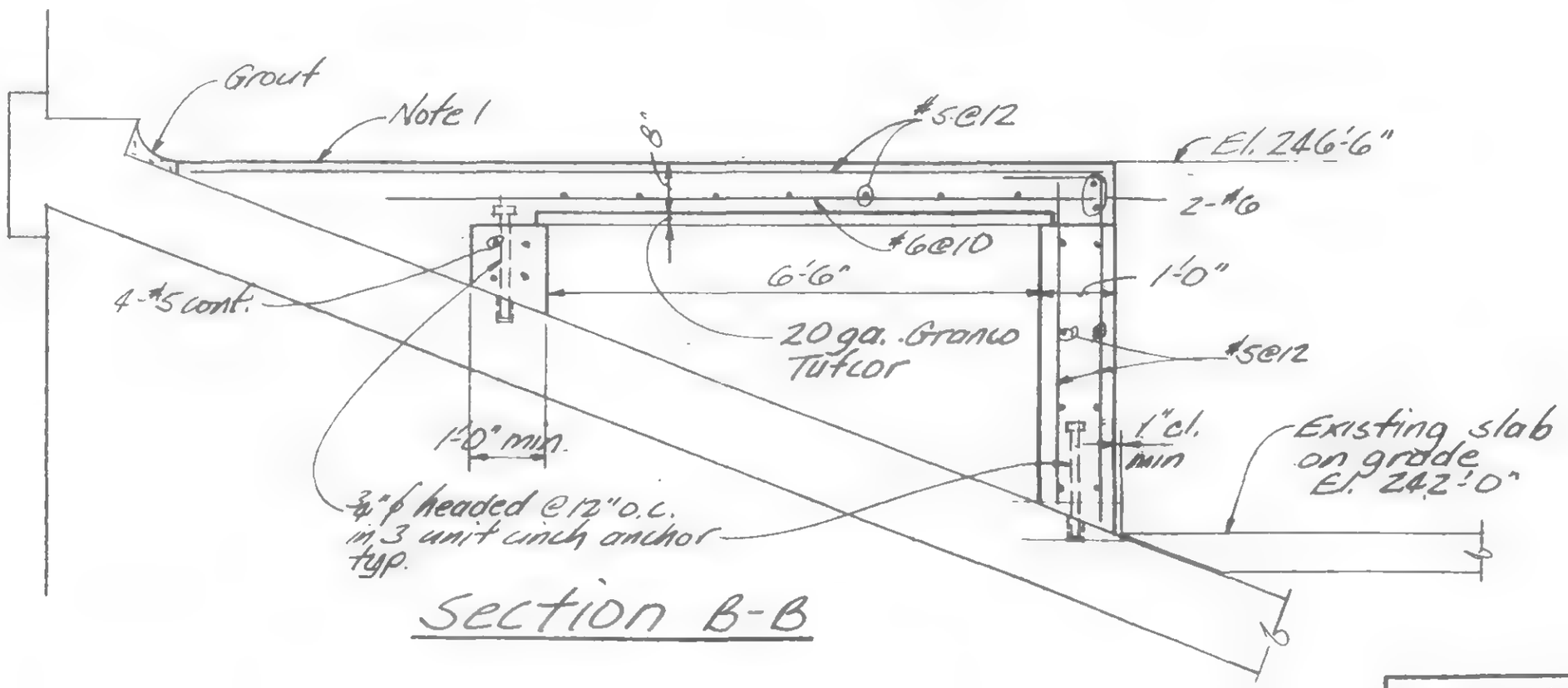

Section B-B

LICENSED PROFESSIONAL ENGINEER — LESLIE E. ROBERTSON — No. 34360 — UNIVERSITY OF THE STATE OF NEW YORK

DESIGNED

DRAWN

REVIEWED

19-JK-1051.1

SKILLING, HELLE, CHRISTIANSEN, ROBERTSON — Structural & Civil Engineers

PROJECT: THE WORLD TRADE CENTER | TITLE: EMERGENCY GENERATOR PLATFORM +EL 246'6" JS&K | DATE: 12-2-71

REVISIONS

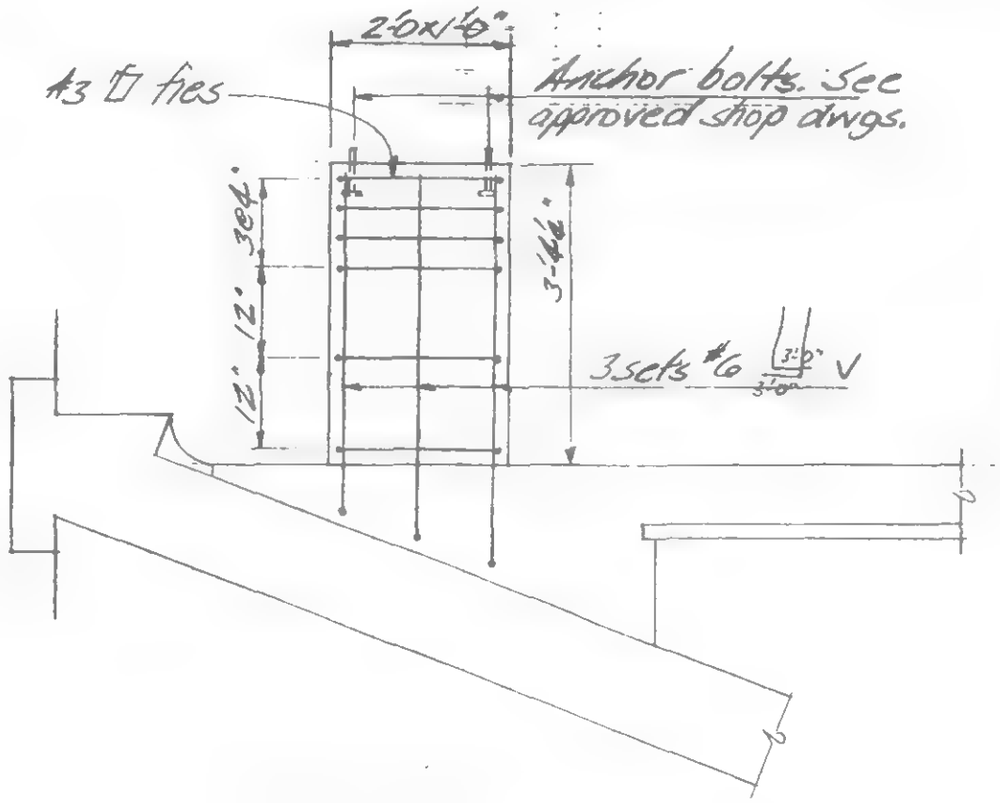

Section C-C

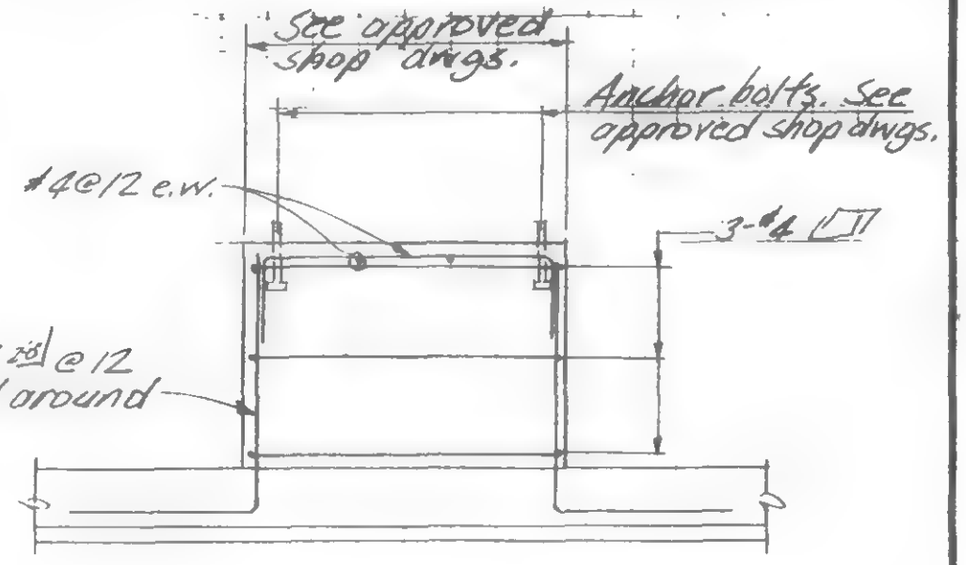

Section D-D

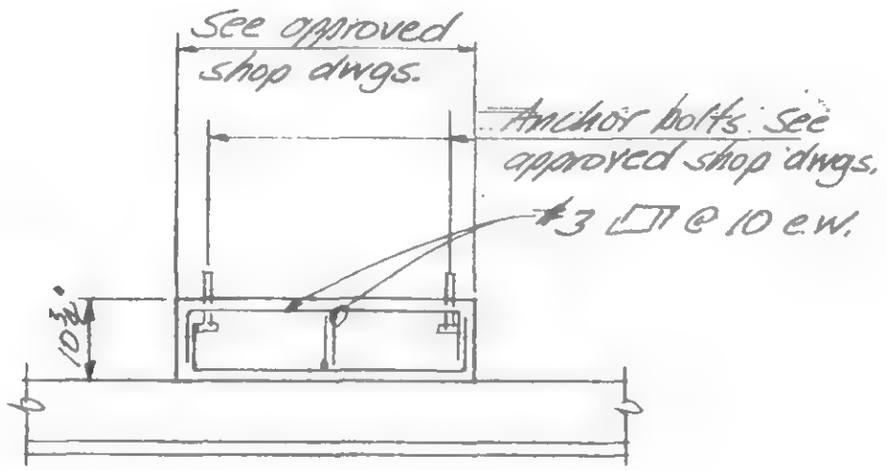

Section E-E

LICENSED PROFESSIONAL ENGINEER — LESLIE E. ROBERTSON — No. 34960 — UNIVERSITY OF THE STATE OF NEW YORK

DESIGNED

DRAWN

REVIEWED

19-JK-1051.Z

SKILLING, HELLE, CHRISTIANSEN, ROBERTSON — Structural & Civil Engineers

PROJECT: THE WORLD TRADE CENTER

TITLE: DETAIL ~~FOR SHEAR HEAD~~ REPAIR

DATE: 12-23-71

REVISIONS

3-10-72

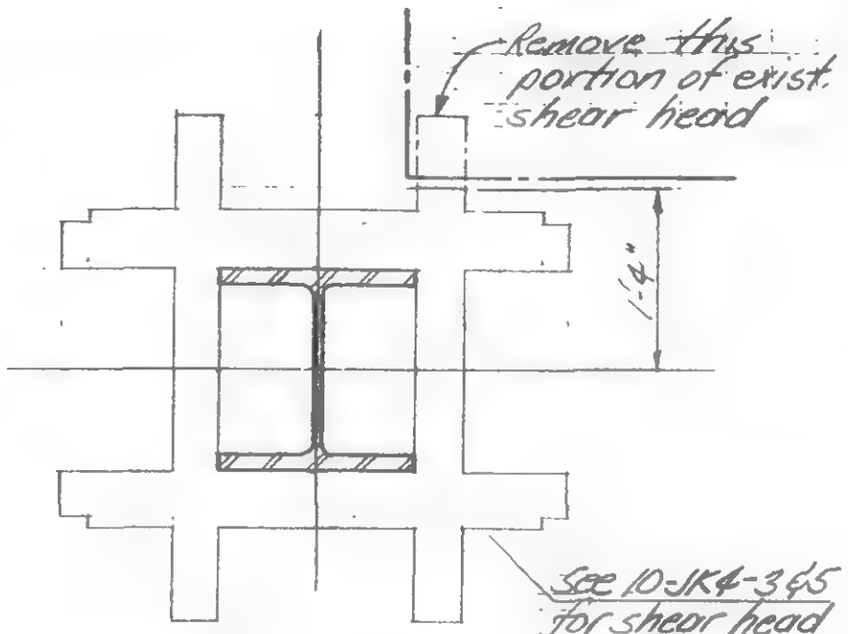

Detail A

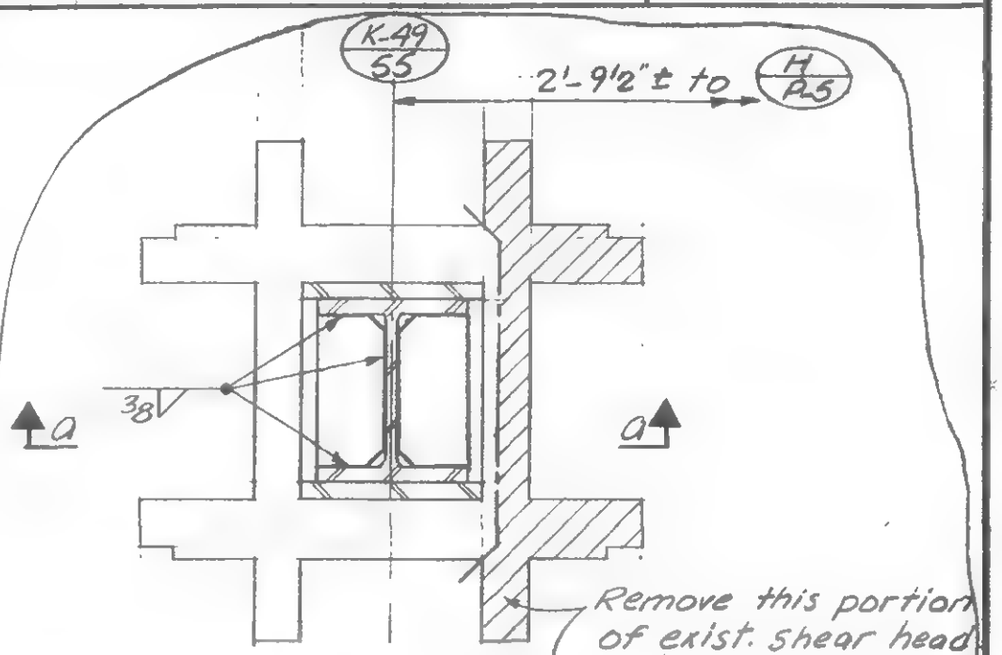

Detail B

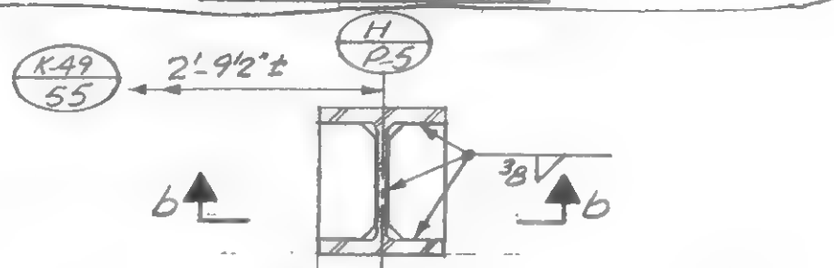

Detail C

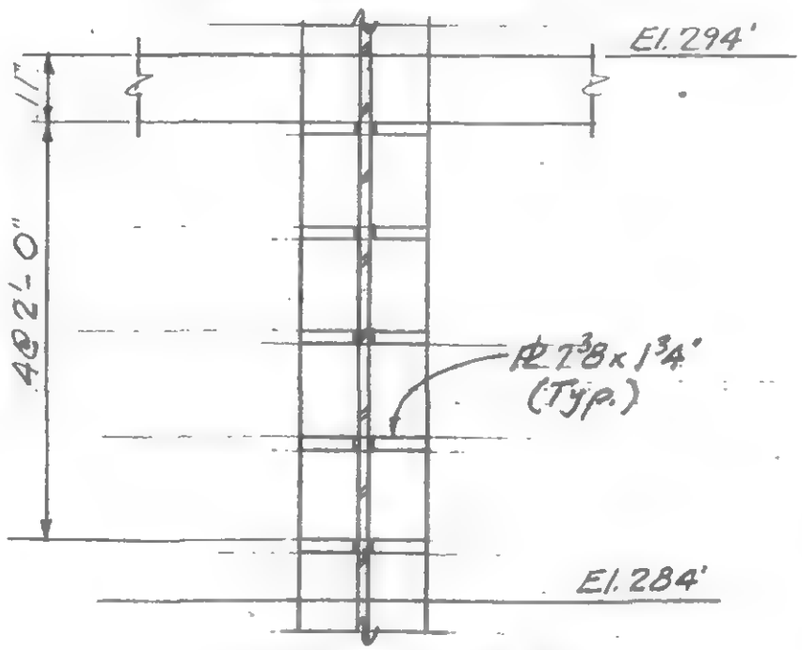

Section b-b
(Not to scale)

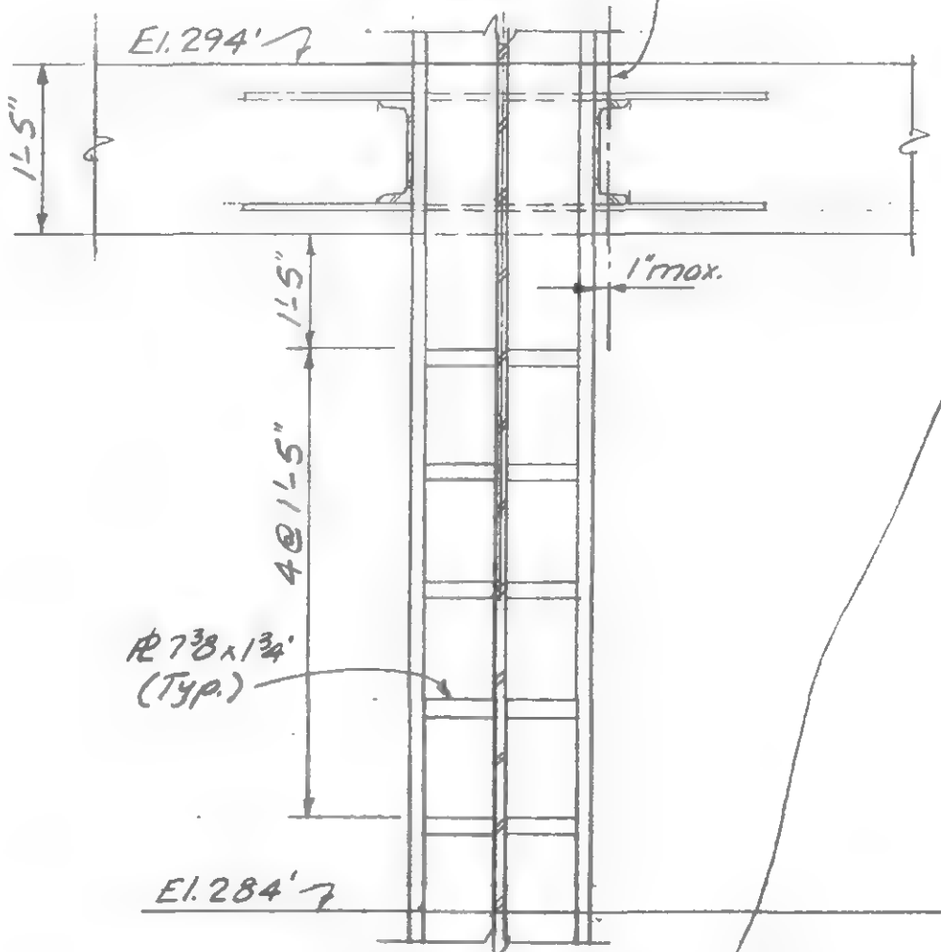

Section a-a
(Not to scale)

LICENSED PROFESSIONAL ENGINEER — LESLIE E. ROBERTSON — No. 34360 — UNIVERSITY OF THE STATE OF NEW YORK

DESIGNED: K. Chiang

DRAWN: J.A. & A.F.

REVIEWED:

19-K-1052.1

SKILLING, HELLE, CHRISTIANSEN, ROBERTSON — Structural & Civil Engineers

PROJECT THE WORLD TRADE CENTER | TITLE BEAM REPAIR AT EL. 310 | DATE 12/23/71

REVISIONS

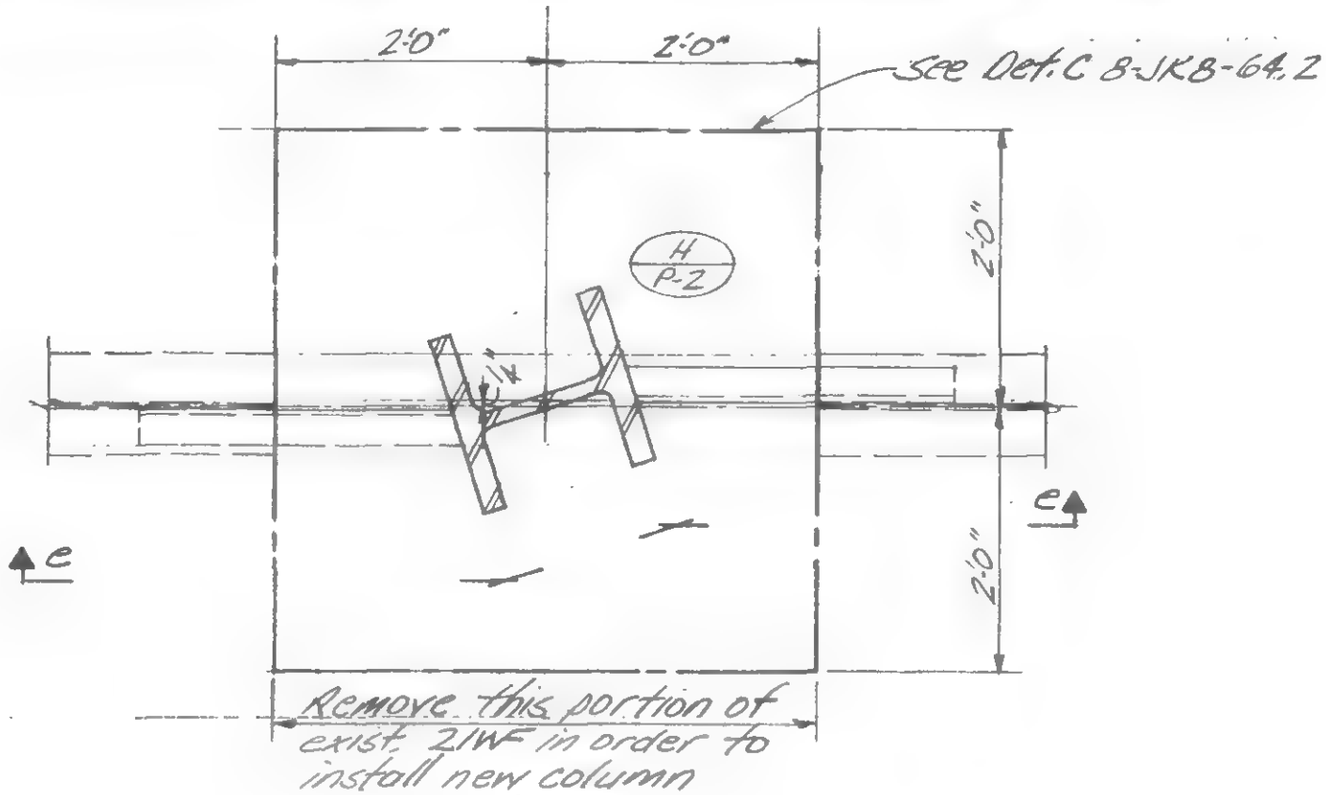

Plan

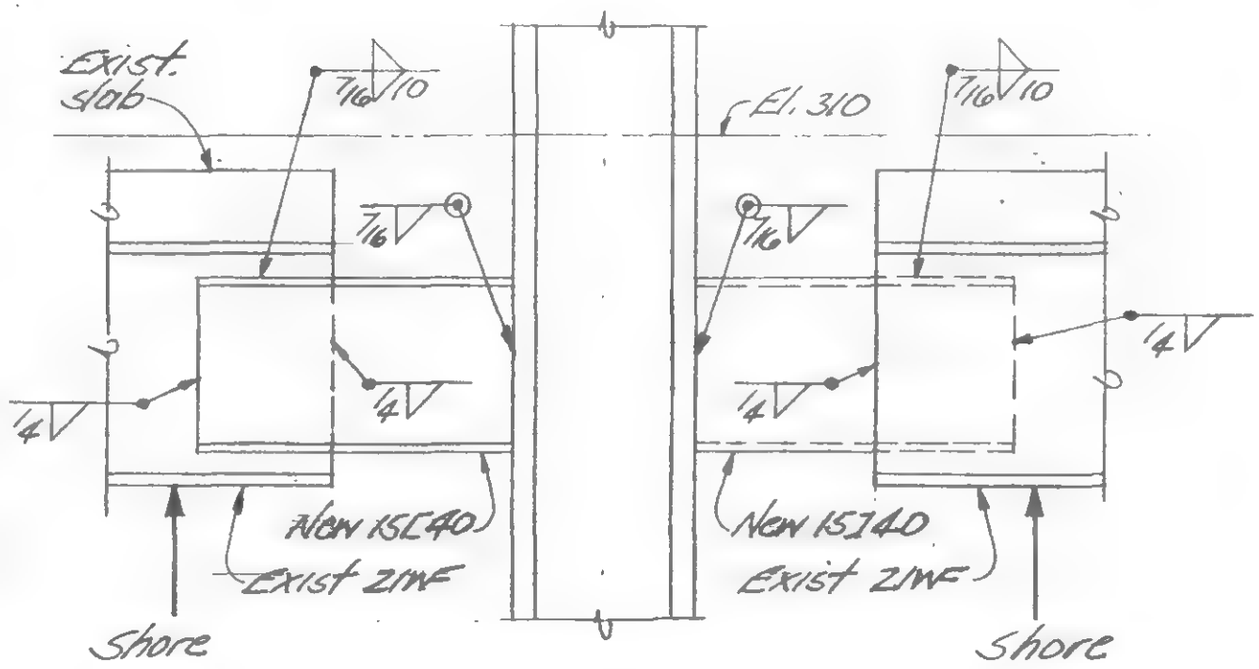

Section e-e

Detail E

LICENSED PROFESSIONAL ENGINEER — LESLIE E. ROBERTSON — No. 34360 — UNIVERSITY OF THE STATE OF NEW YORK

DESIGNED K. Chiang

DRAWN

REVIEWED

19-K-1052.2

SKILLING, HELLE, CHRISTIANSEN, ROBERTSON — Structural & Civil Engineers

PROJECT: ~~THE WORLD TRADE CENTER~~

TITLE: REINFORCING PLATES OF EXISTING COLUMNS

DATE: 12-23-71

REVISIONS

Col. K35-5 & K35-6 - North Face

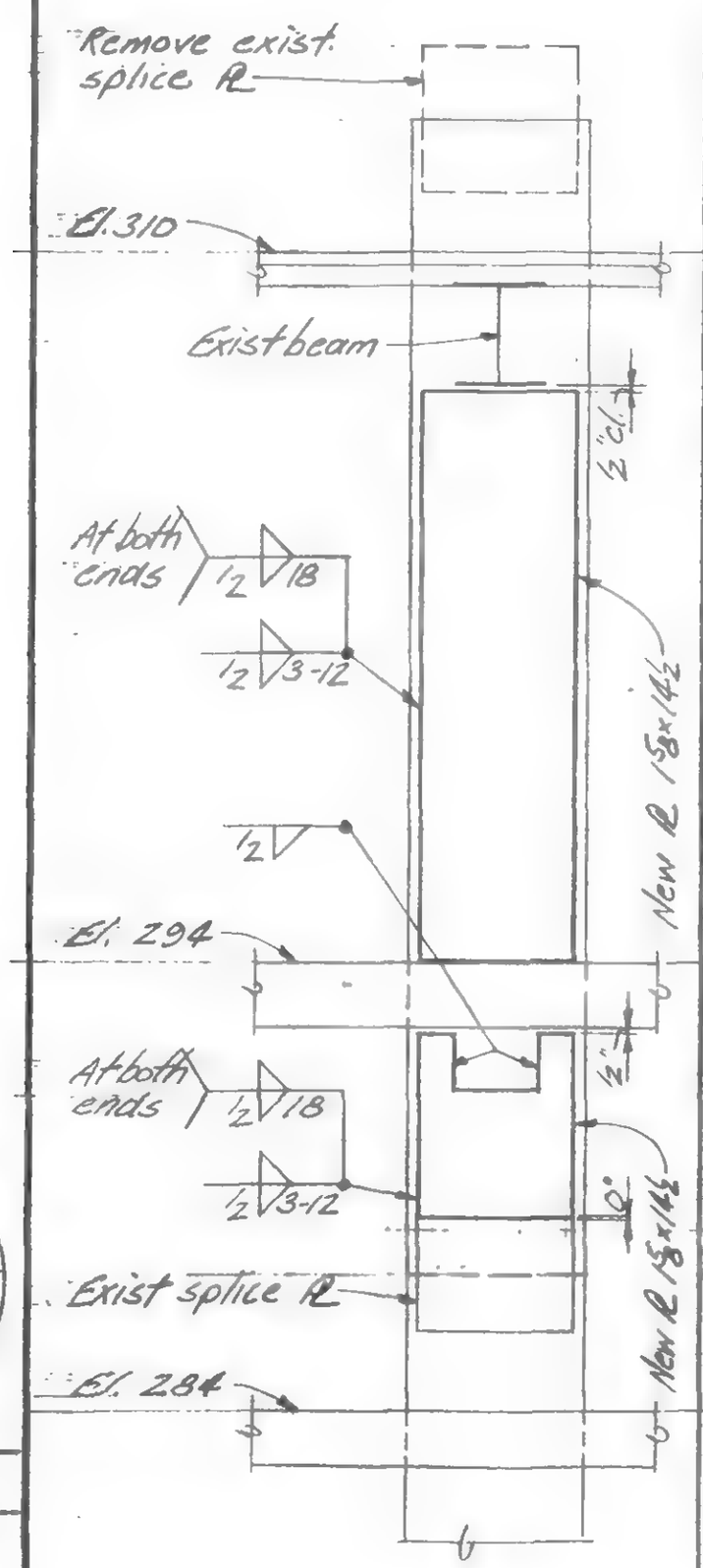

Col. K35-5 & K35-6 - South Face

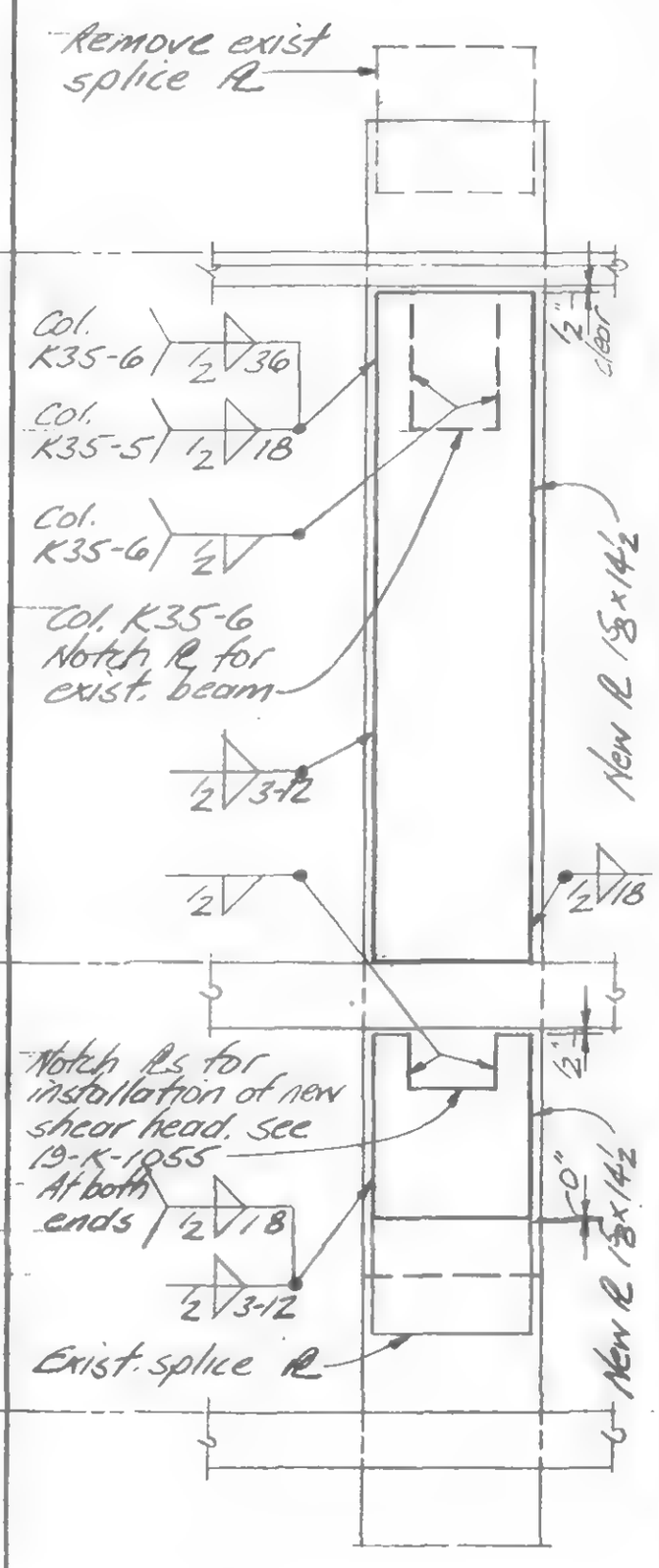

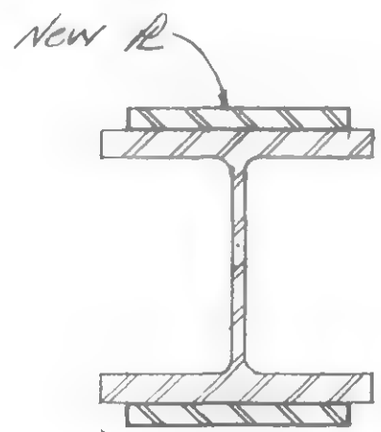

Typical Column Section

Notes:

1. All new cover plates to be Fy 36.
2. Field measurement is required to establish the length of all new cover plates.

LICENSED PROFESSIONAL ENGINEER — LESLIE E. ROBERTSON — No. 34360 — UNIVERSITY OF THE STATE OF NEW YORK

DESIGNED K. Chiang

DRAWN

REVIEWED

19-K-1053.1

SKILLING, HELLE, CHRISTIANSEN, ROBERTSON — Structural & Civil Engineers

PROJECT: THE WORLD TRADE CENTER | TITLE: REINFORCING PLATES OF EXISTING COLUMNS | DATE: 12-23-71

REVISIONS

Col. K31-6 – North Face | Col. K31-6 – South Face | Col. K35-4 – North Face | Col. K35-4 – South Face

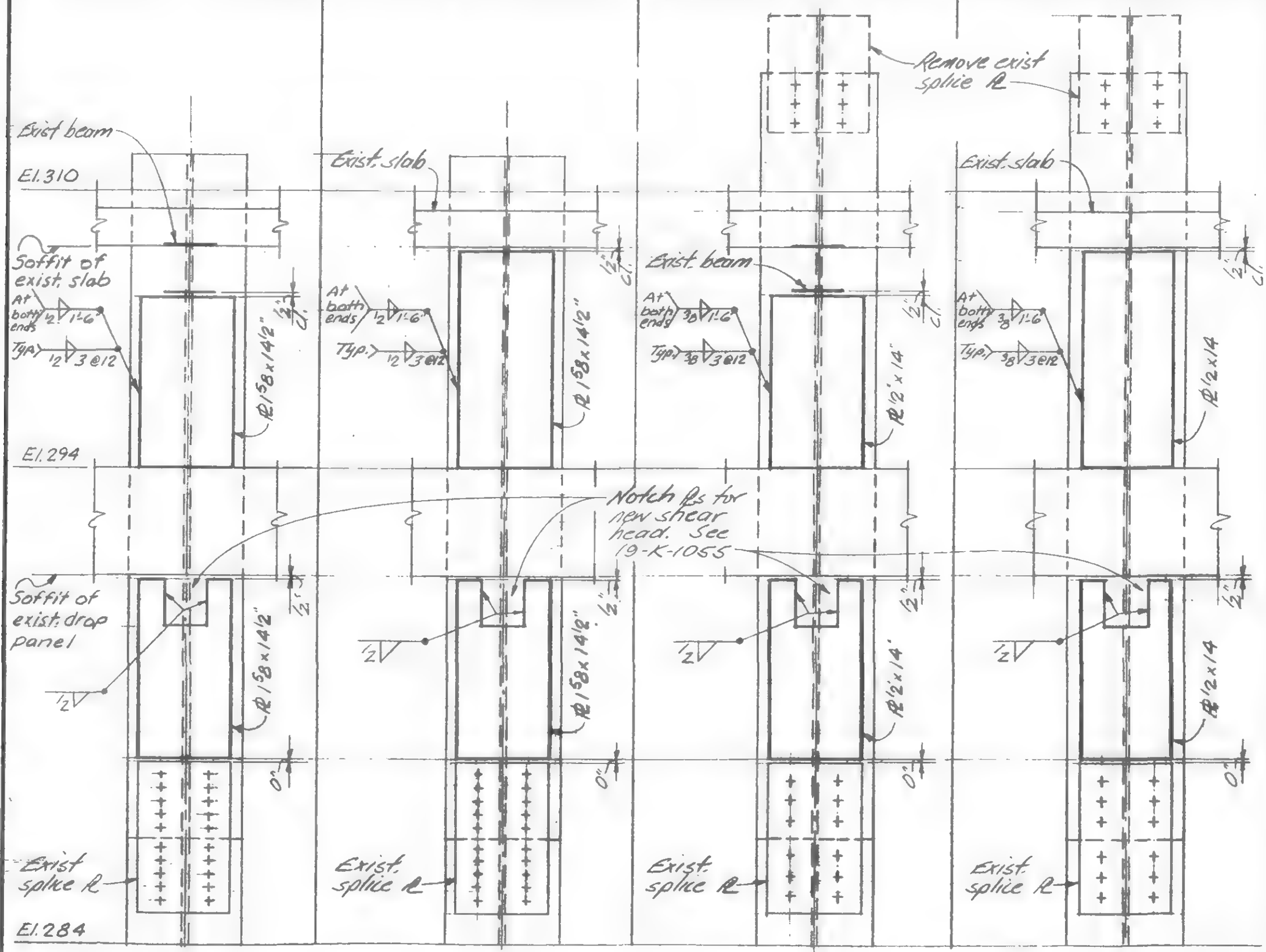

Note: See typical column section and notes in 19-K-1053.1

LICENSED PROFESSIONAL ENGINEER — LESLIE E. ROBERTSON — No 34960 — UNIVERSITY OF THE STATE OF NEW YORK

DESIGNED K. CHIANG

DRAWN A. FRANQUI

REVIEWED WAB

19-K-1053.2

SKILLING, HELLE, CHRISTIANSEN, ROBERTSON — Structural & Civil Engineers

PROJECT: THE WORLD TRADE CENTER | TITLE: REINFORCING PLATES OF EXISTING COLUMNS | DATE: 12-23-71

REVISIONS

Col. $\frac{K41}{10}$ North & South Face

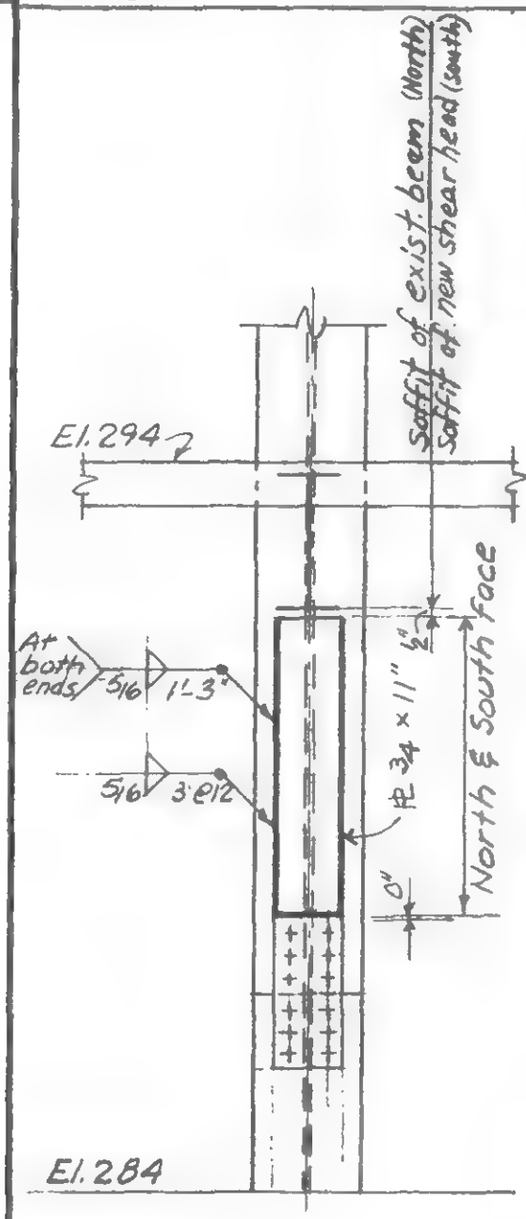

See 19-K-1053.1 for typ. section and notes.

LICENSED PROFESSIONAL ENGINEER LESLIE E. ROBERTSON No. 34360 UNIVERSITY OF THE STATE OF NEW YORK

DESIGNED CHIANG

DRAWN A.FRANQUI

REVIEWED

19-K-1053.3

SKILLING, HELLE, CHRISTIANSEN, ROBERTSON — Structural & Civil Engineers

PROJECT: THE WORLD TRADE CENTER | TITLE: BASE PLATE REPAIR | DATE: 2-15-72

REVISIONS

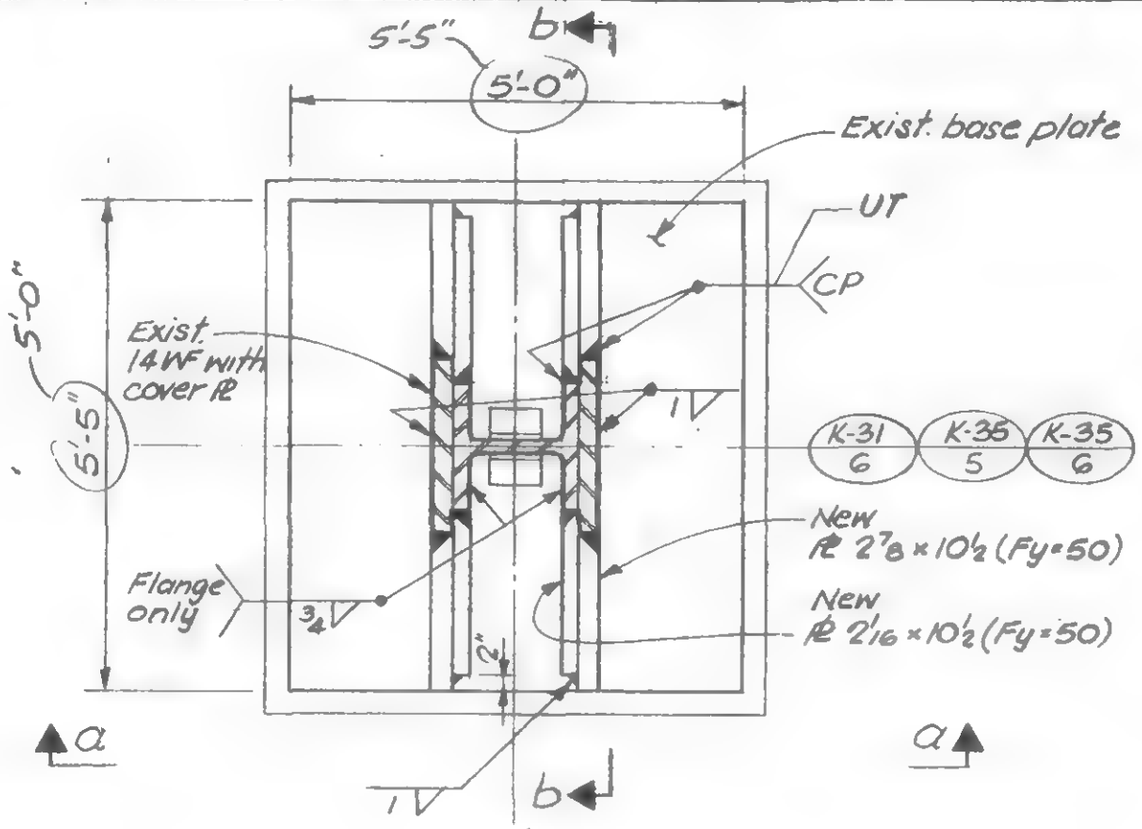

Plan

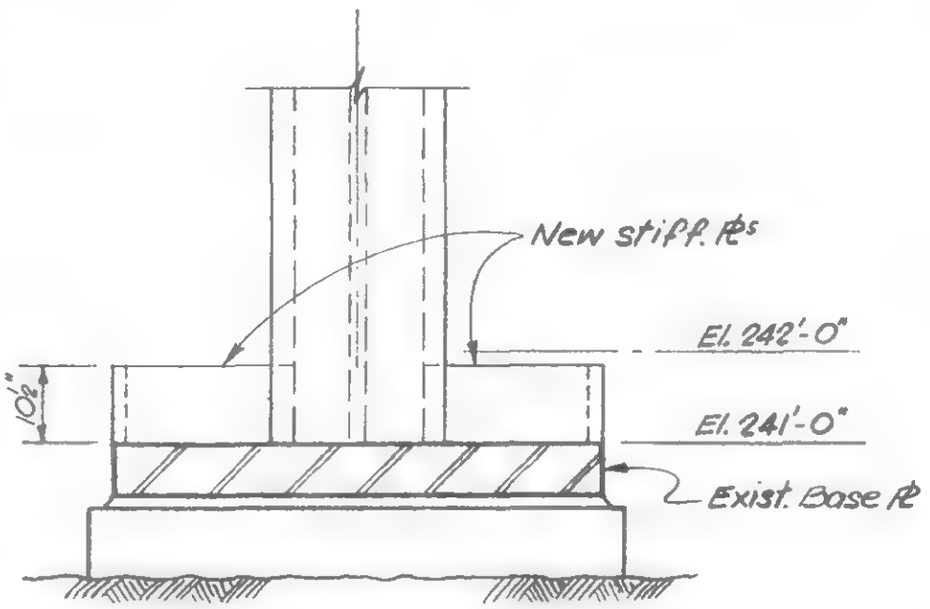

Section b-b

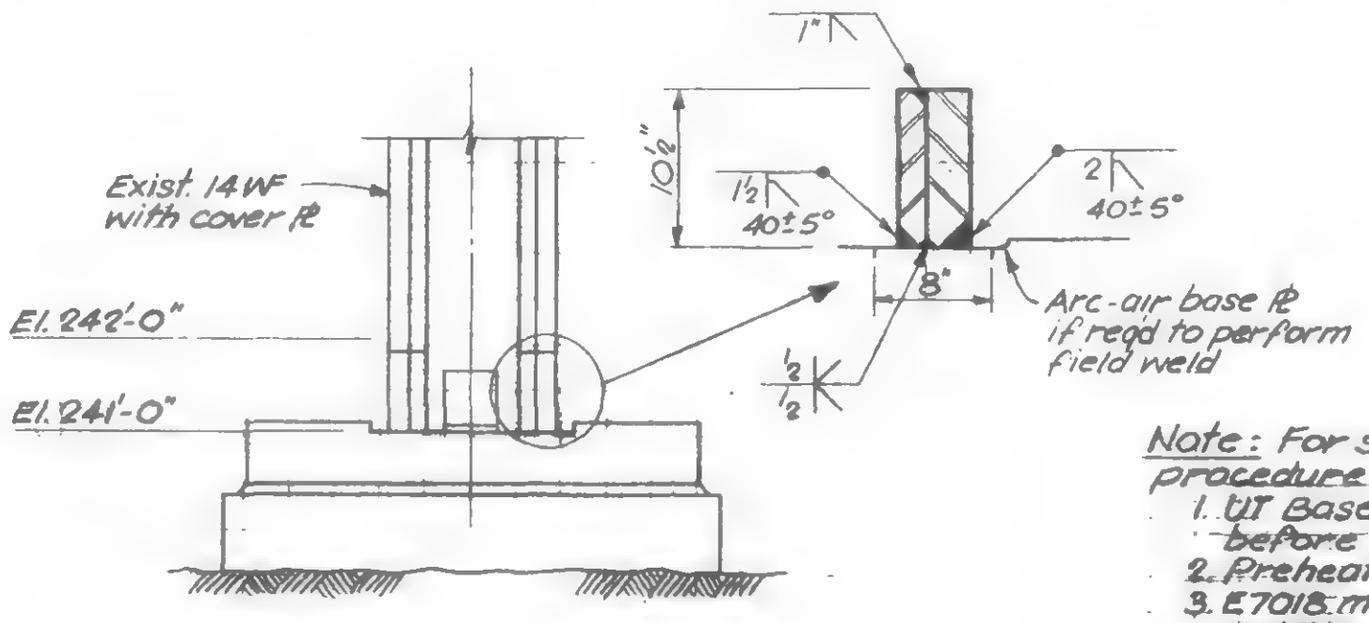

Section a-a

Note: For stiffener to base plate, welding procedure shall include the following:

1. UT Base Pl. 4 locations (8"x21") 100% before welding.
2. Preheat (soak) 250° F minimum preheat.
3. E7018 manual or Fabshield semiautomatic welding.
4. Postheat 200° F for 18-24 hours, slow cool.
5. UT welds after cooling.

LICENSED PROFESSIONAL ENGINEER — LESLIE E. ROBERTSON — No. 34360 — UNIVERSITY OF THE STATE OF NEW YORK

DESIGNED D.S.

DRAWN S.C.

REVIEWED LE Robertson

19-K-1054

SKILLING, HELLE, CHRISTIANSEN, ROBERTSON — Structural & Civil Engineers

PROJECT: THE WORLD TRADE CENTER | TITLE: SHEAR HEAD REPAIR - CINCH ANCHORS | DATE: 6-30-72

REVISIONS

10-5-72

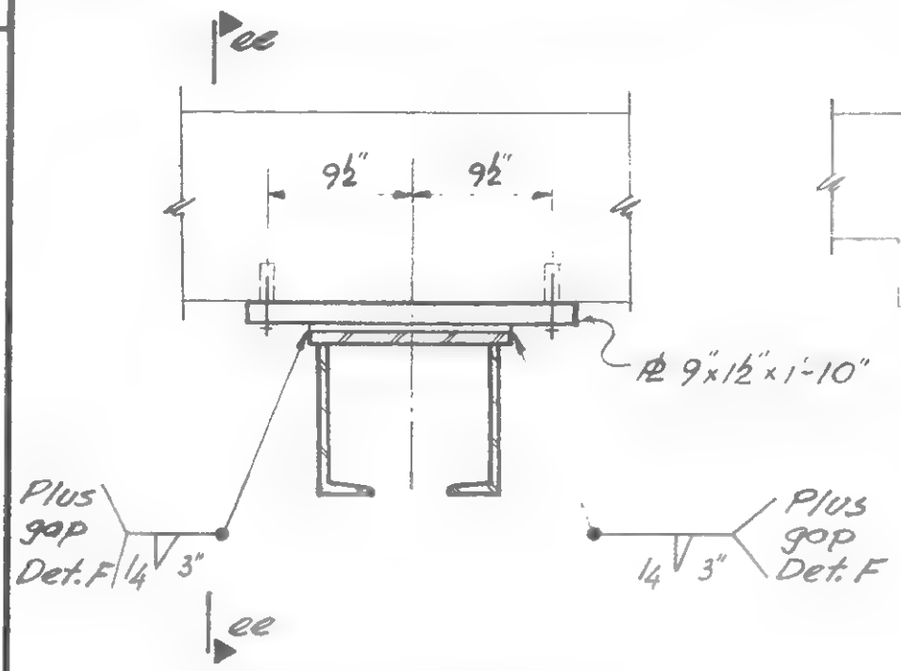

Section e-e
19-K-1055.2

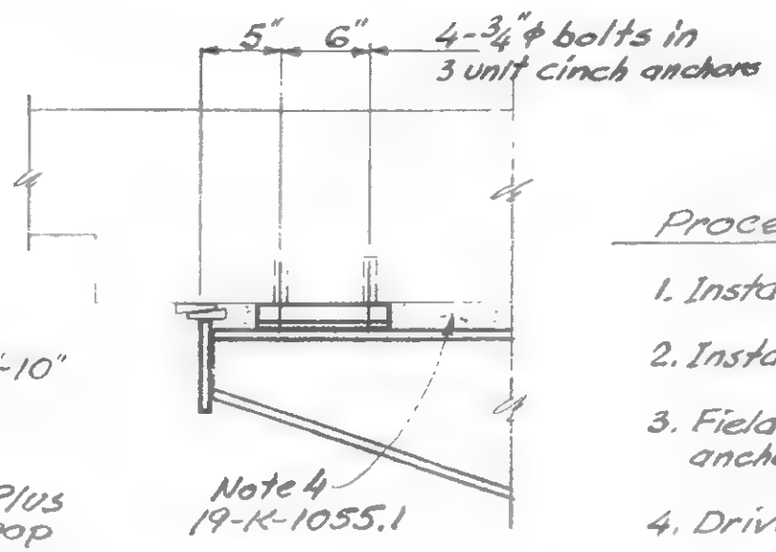

Section ee-ee

Procedure

1. Install Steel Shear head repair
2. Install Cinch anchors
3. Field measure as installed cinch anchor locations & drill holes in 1½"℄
4. Drive steel wedges.
5. Tighten bolts to bring plate snug with concrete.
6. Pack space between 1½"℄ and top flange shear head repair.
7. Weld to shear head repair

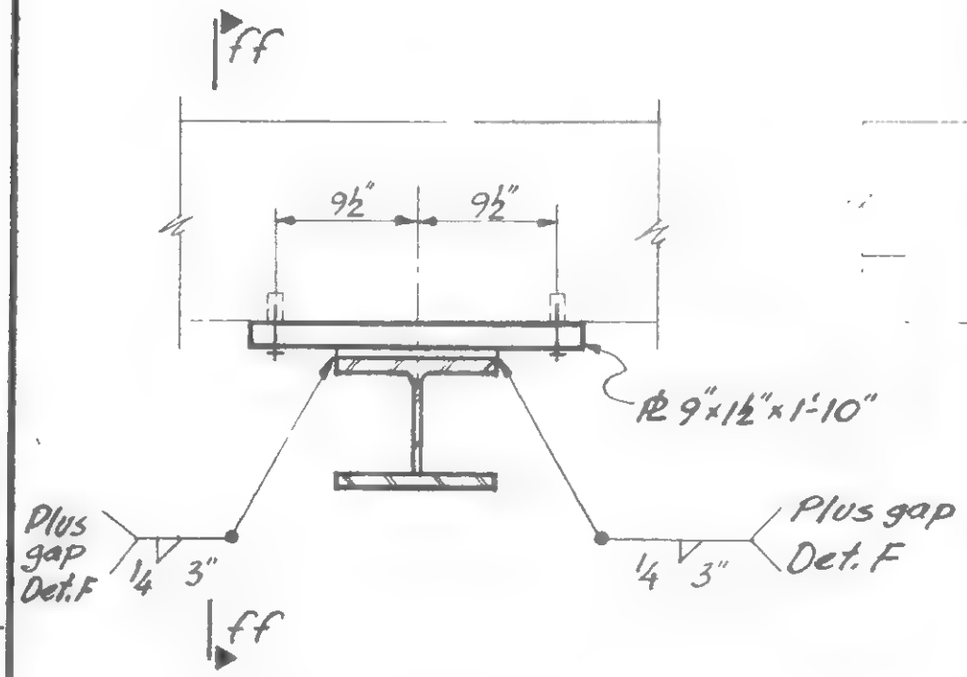

Section f-f
19-K-1055.2

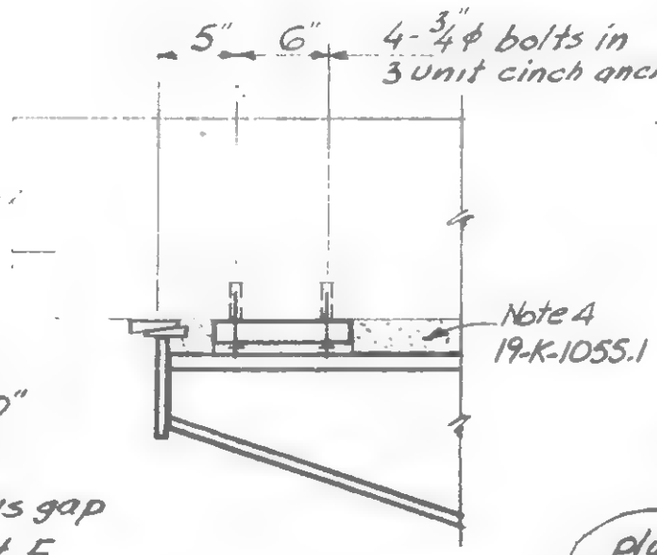

Section ff-ff

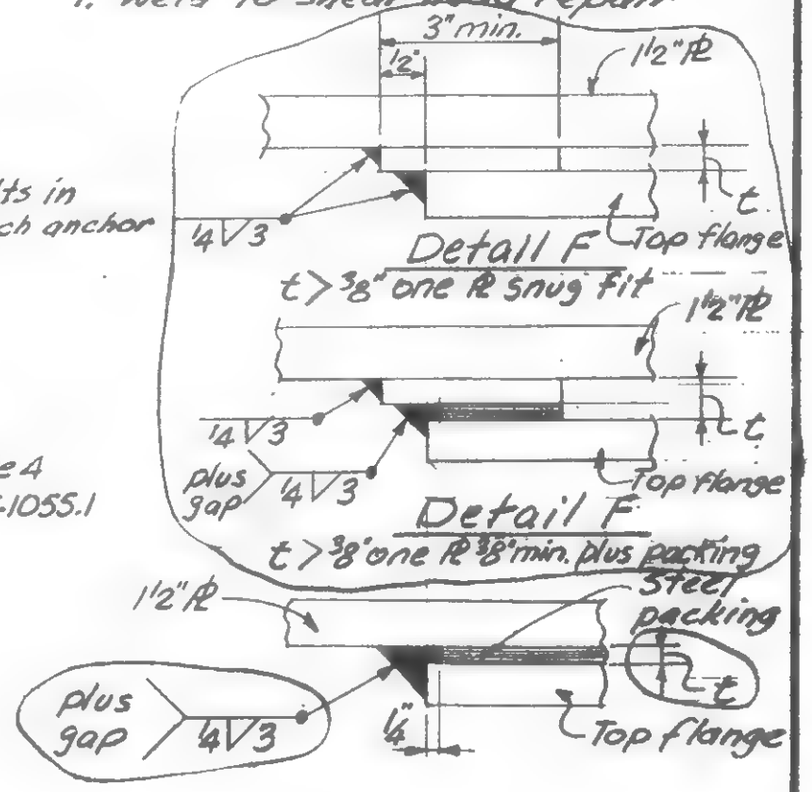

Detail F
t < ⅜"

LICENSED PROFESSIONAL ENGINEER — LESLIE E. ROBERTSON — No 34360 — UNIVERSITY OF THE STATE OF NEW YORK

DESIGNED

DRAWN J G

REVIEWED

19-K-1055.3

SKILLING, HELLE, CHRISTIANSEN, ROBERTSON — Structural & Civil Engineers

PROJECT: THE WORLD TRADE CENTER | TITLE: DETAIL ~~FOR SHEAR HEAD REPAIR~~ | DATE: 12-23-71

REVISIONS

1-15-72
Gen. Rev.

6-30-72

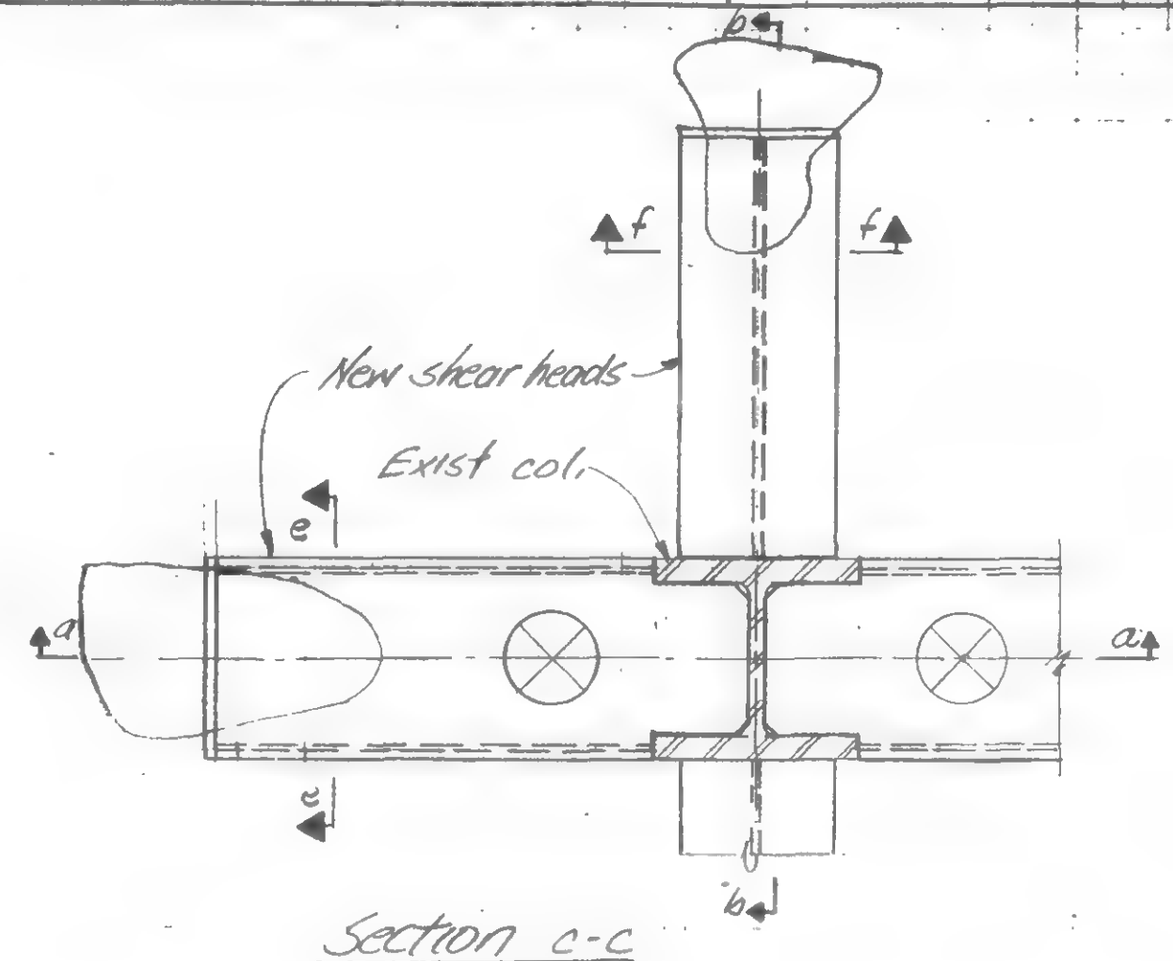

Section c-c

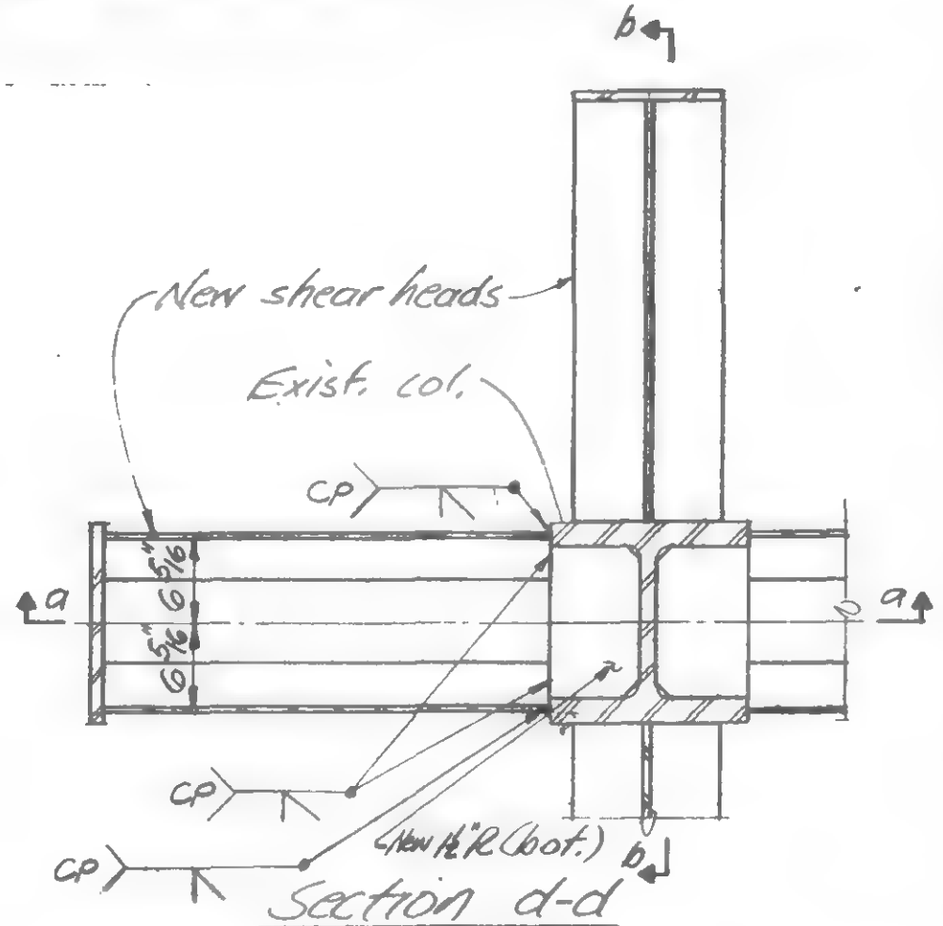

Section d-d

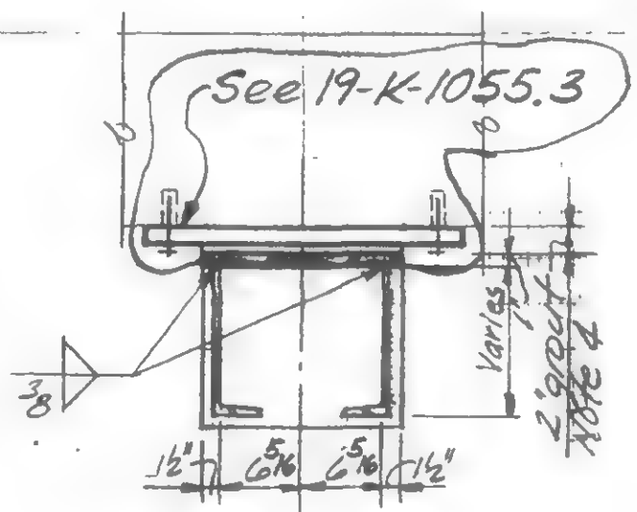

Section e-e

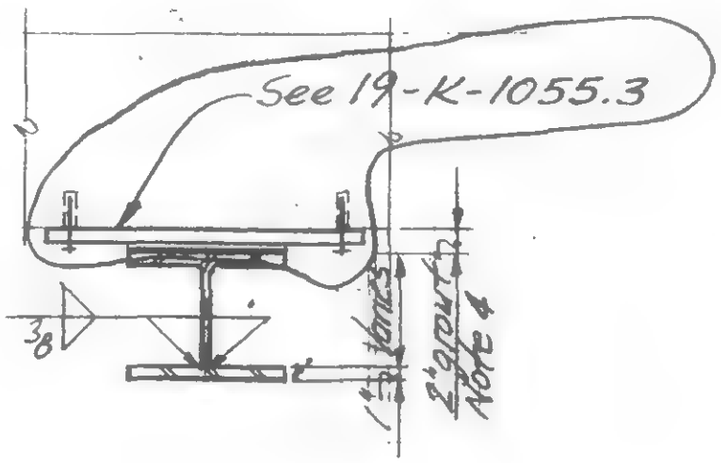

Section f-f

LICENSED PROFESSIONAL ENGINEER
LESLIE E. ROBERTSON
No. 34360
UNIVERSITY OF THE STATE OF NEW YORK

DESIGNED

DRAWN

REVIEWED

19-K-1055.2

SKILLING, HELLE, CHRISTIANSEN, ROBERTSON — Structural & Civil Engineers

PROJECT: THE WORLD TRADE CENTER | TITLE: DETAIL FOR SHEAR HEAD REPAIR | DATE: 12-23-71

REVISIONS

1-15-72 Gen. Rev.

6-30-72

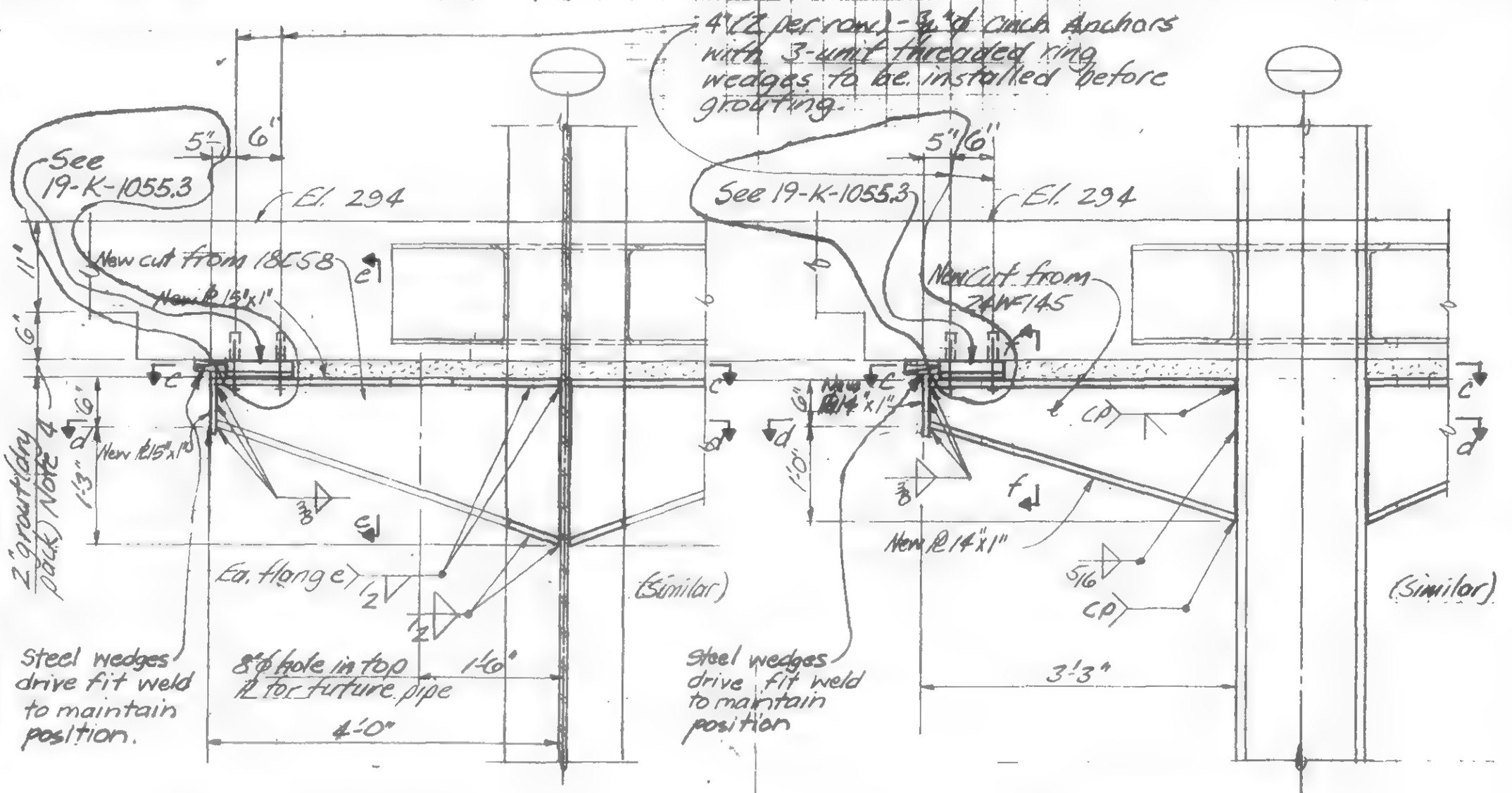

Section a-a

Section b-b

Notes:

1. All material to be fabricated from field measured dimensions.
2. All new steel to be Fy36
3. All electrodes to be E70xx
4. Grout to achieve 100% contact between plates and existing drop panel. Grout to be premixed Embeco grout mixed to flowable consistency and placed in conformance with manufactures written directions
5. Provide erection aides as required

LICENSED PROFESSIONAL ENGINEER — LESLIE E. ROBERTSON — No. 34360 — UNIVERSITY OF THE STATE OF NEW YORK

DESIGNED

DRAWN

REVIEWED

19-K-1055.1

SKILLING, HELLE, CHRISTIANSEN, ROBERTSON — Structural & Civil Engineers

PROJECT THE WORLD TRADE CENTER | TITLE DETAIL FOR SHEAR HEAD REPAIR K43/7 & K43/8 | DATE 12-23-71

REVISIONS

1-14-72 Gen. Rev.

6-30-72

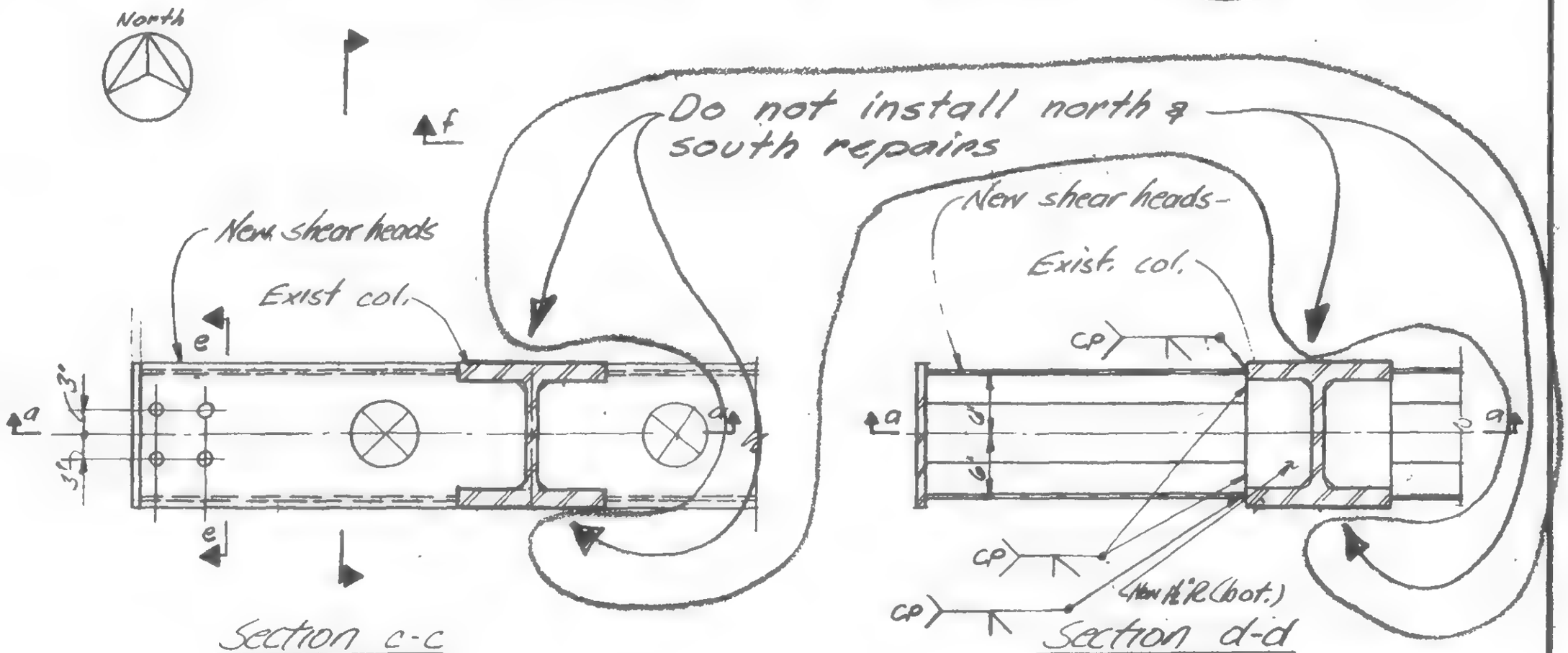

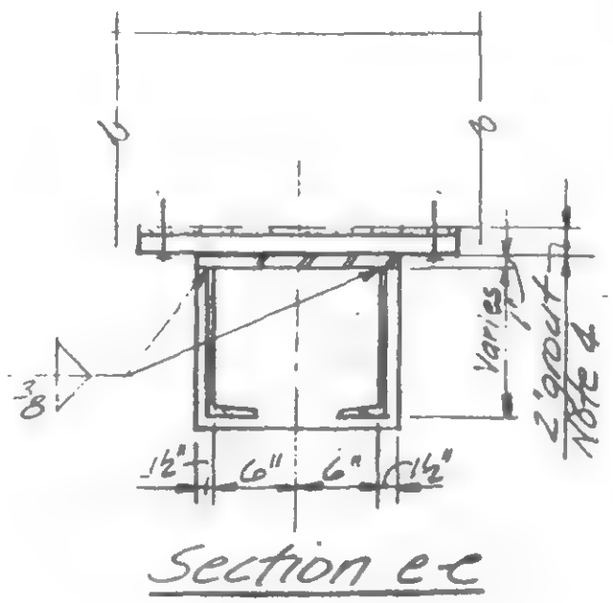

LICENSED PROFESSIONAL ENGINEER LESLIE E ROBERTSON NO 34360 UNIVERSITY OF THE STATE OF NEW YORK

SIGNED

DRAWN

REVIEWED

K43/7 & K43/8

19-K-1056.2

SKILLING, HELLE, CHRISTIANSEN, ROBERTSON · Structural & Civil Engineers

PROJECT THE WORLD TRADE CENTER | TITLE DETAIL FOR SHEAR HEAD REPAIR K-43/7 & K43/8 | DATE 12-23-71

REVISIONS

1-15-72 Gen. Rev.

6-30-72

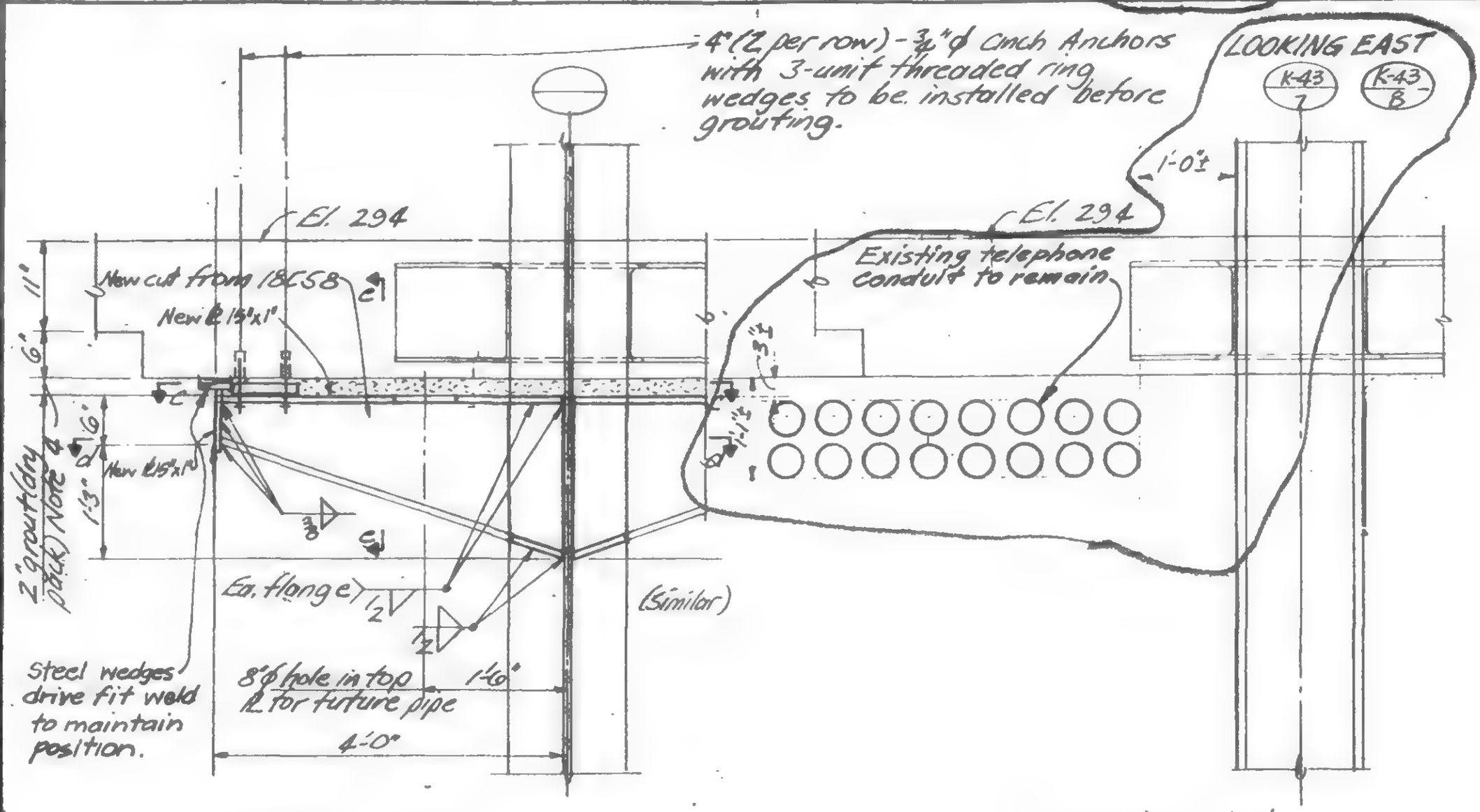

Section a-a

Section b-b

Notes:

1. All material to be fabricated from field measured dimensions.
2. All new steel to be Fy36
3. All electrodes to be E70XX
4. Grout to achieve 100% contact between plates and existing drop panel. Grout to be premixed Embeco grout mixed to flowable consistency and placed in conformance with manufactures written directions
5. Provide erection aides as required.

LICENSED PROFESSIONAL ENGINEER LESLIE E. ROBERTSON No. 34360 UNIVERSITY OF THE STATE OF NEW YORK

DESIGNED

DRAWN

REVIEWED

K43/7 & K43/8

19-K-1055.1

SKILLING, HELLE, CHRISTIANSEN, ROBERTSON — Structural & Civil Engineers

PROJECT THE WORLD TRADE CENTER | TITLE DETAIL FOR SHEAR HEAD REPAIR K41/8 | DATE 12-23-71

REVISIONS
1-15-72 Gen. Rev.
6-30-72

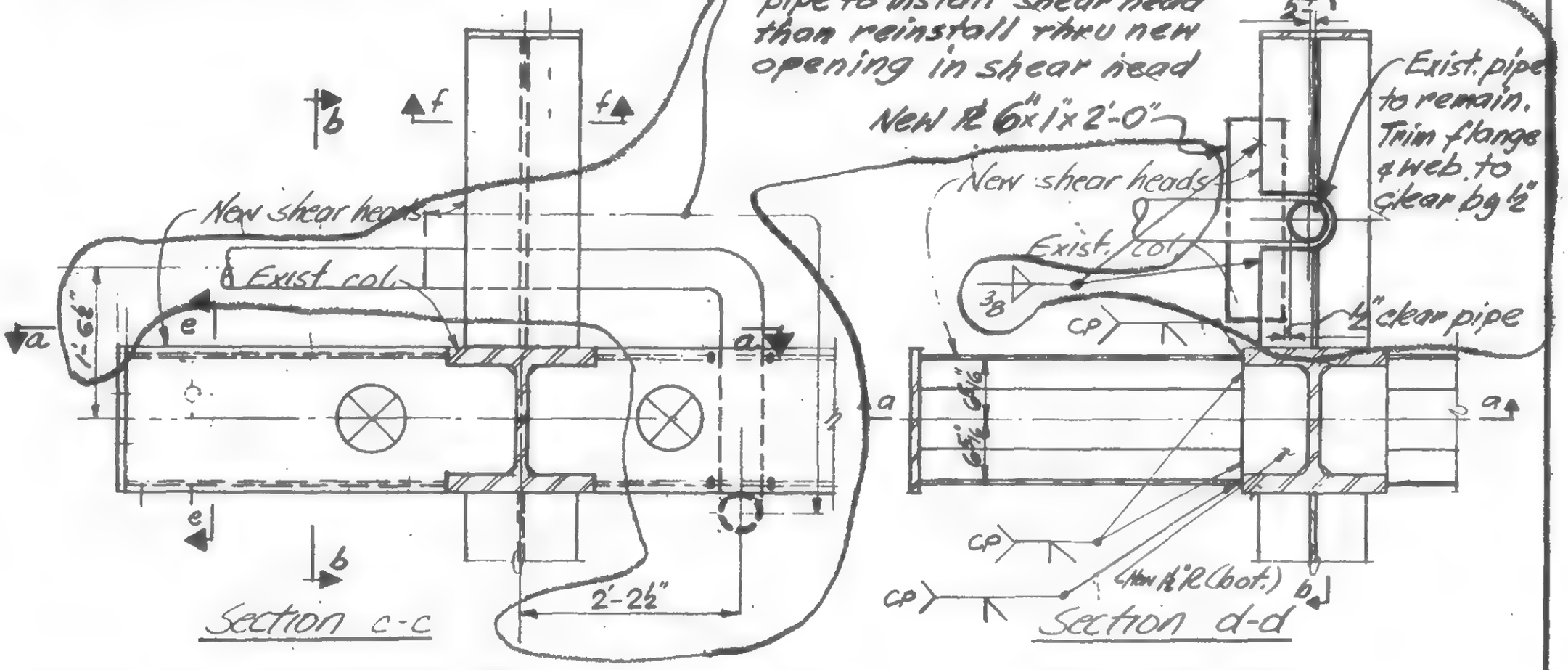

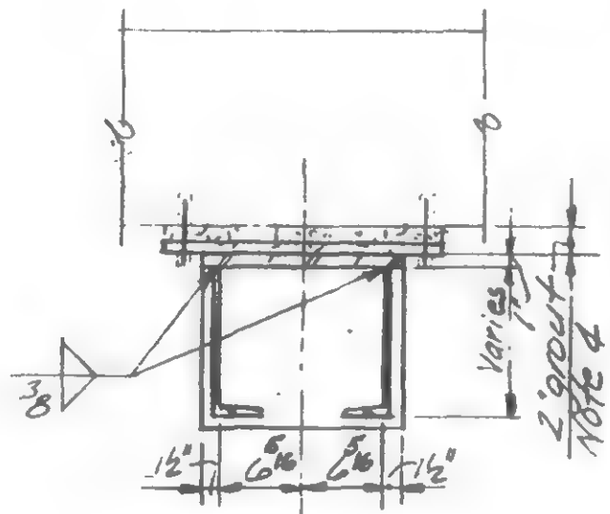

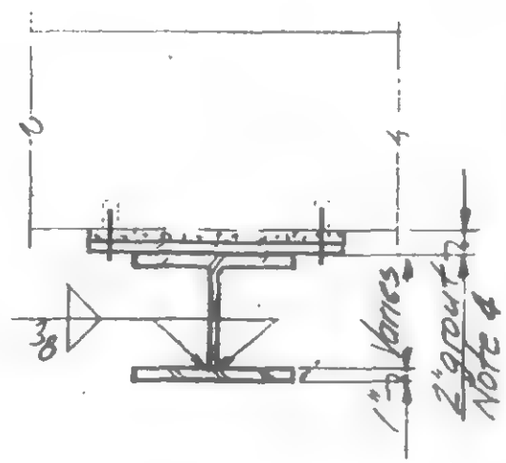

LICENSED PROFESSIONAL ENGINEER — LESLIE E. ROBERTSON — NO 34380 — UNIVERSITY OF THE STATE OF NEW YORK

ISSUED
DRAWN
REVIEWED

K41/8
19-K-1055.2

SKILLING, HELLE, CHRISTIANSEN, ROBERTSON · Structural & Civil Engineers

PROJECT THE WORLD TRADE CENTER | TITLE DETAIL FOR SHEAR HEAD REPAIR K41/8 | DATE 12-23-71

REVISIONS

1-15-72 Gen. Rev.

6-30-72 R

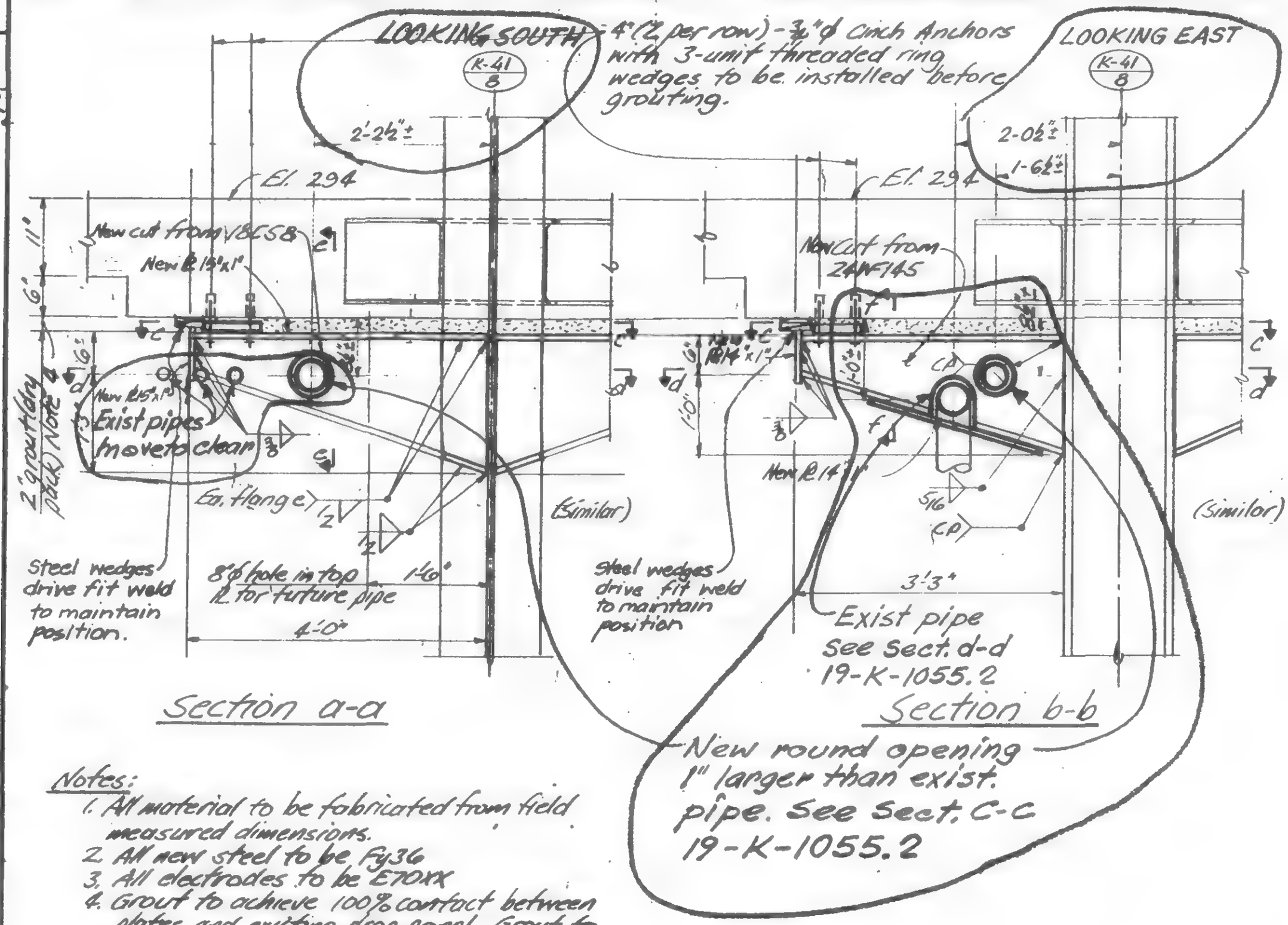

Notes:

1. All material to be fabricated from field measured dimensions.
2. All new steel to be Fy36
3. All electrodes to be E70XX
4. Grout to achieve 100% contact between plates and existing drop panel. Grout to be premixed Embeco grout mixed to flowable consistency and placed in conformance with manufactures written directions
5. Provide erection aides as required

LICENSED PROFESSIONAL ENGINEER LESLIE E. ROBERTSON No 24360 UNIVERSITY OF THE STATE OF NEW YORK

DESIGNED

DRAWN

REVIEWED

K 41/8

19-K-1055.1

SKILLING, HELLE, CHRISTIANSEN, ROBERTSON — Structural & Civil Engineers

PROJECT: THE WORLD TRADE CENTER | TITLE: DETAIL FOR SHEAR HEAD REPAIR K37/9 & K41/9 | DATE: 12-23-71

REVISIONS
1-15-72 Gen. Rev.
6-30-72
8-31-72

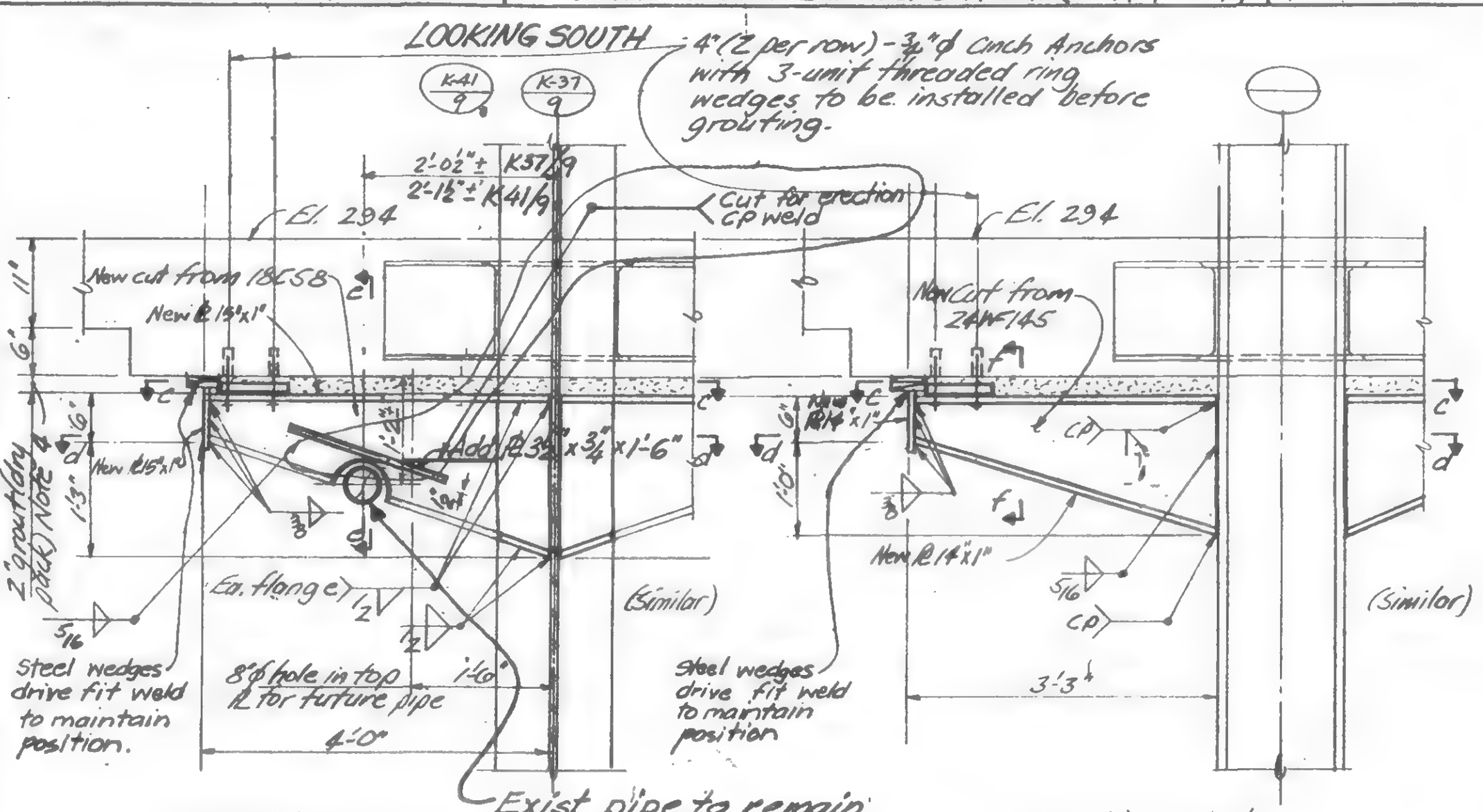

Section a-a

Section b-b

Notes:

1. All material to be fabricated from field measured dimensions.
2. All new steel to be Fy36.
3. All electrodes to be E70XX
4. Grout to achieve 100% contact between plates and existing drop panel. Grout to be premixed Embeco grout mixed to flowable consistency and placed in conformance with manufactures written directions
5. Provide erection aides as required

LICENSED PROFESSIONAL ENGINEER — LESLIE E. ROBERTSON — No 34360 — UNIVERSITY OF THE STATE OF NEW YORK

DESIGNED
DRAWN
REVIEWED

∴ K37/9 & K41/9
19-K-1055.1

SKILLING, HELLE, CHRISTIANSEN, ROBERTSON — Structural & Civil Engineers

PROJECT: THE WORLD TRADE CENTER | TITLE: DETAIL FOR SHEAR HEAD REPAIR - K37/2 | DATE: 12-23-71

REVISIONS

1-15-72 Gen. Rev.

6-30-72

5-4-73

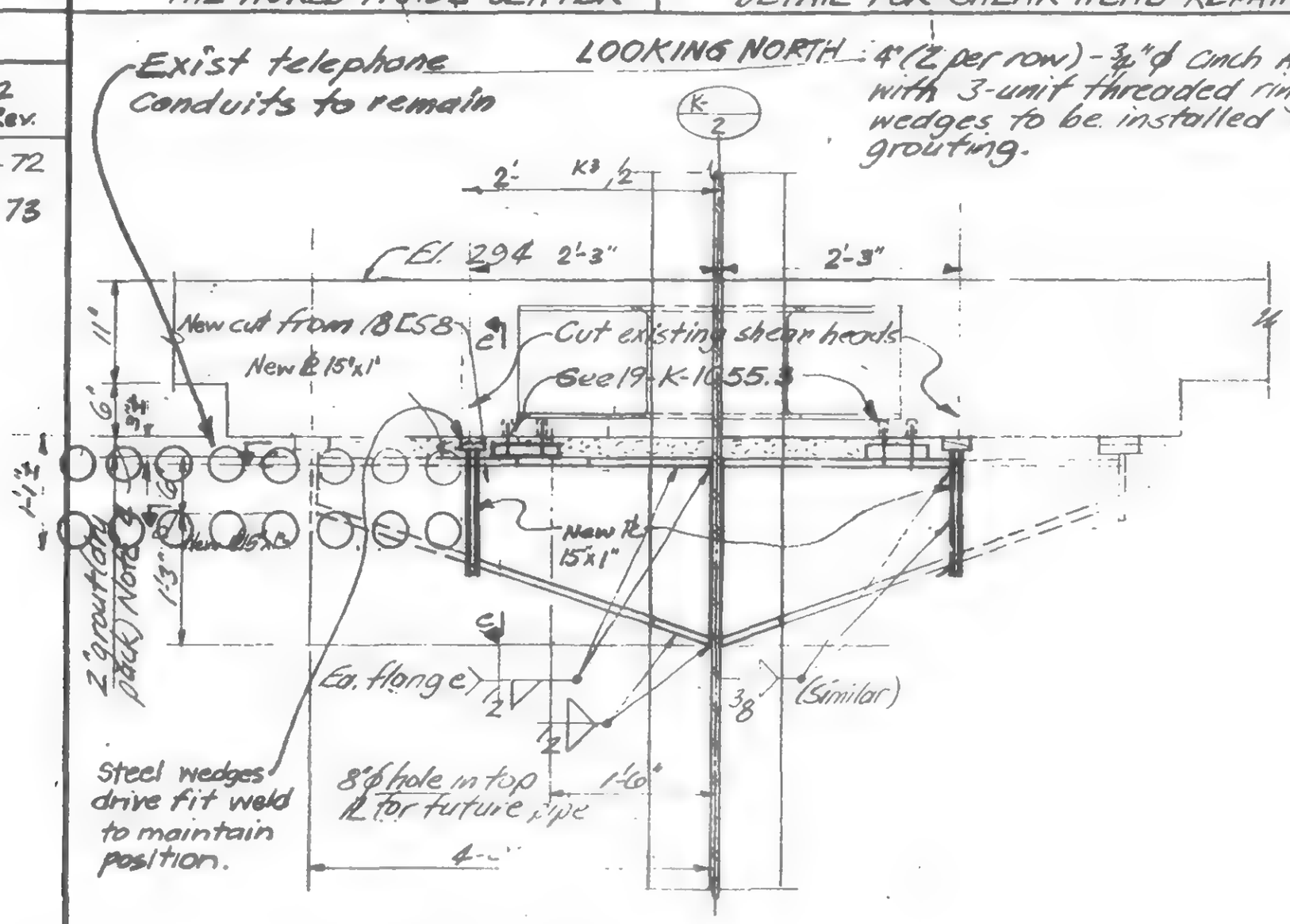

Section a-a

Notes:

1. All material to be fabricated from field measured dimensions.
2. All new steel to be Fy36
3. All electrodes to be E70XX
4. Grout to achieve 100% contact between plates and existing drop panel. Grout to be premixed Embeco, grout mixed to flowable consistency and placed in conformance with manufactures written directions
5. Provide erection aides as required

LICENSED PROFESSIONAL ENGINEER — LESLIE E. ROBERTSON — No. 34980 — UNIVERSITY OF THE STATE OF NEW YORK

DESIGNED

DRAWN

REVIEWED

K37/2

19-K-1055.1

SKILLING, HELLE| CHRISTIANSEN, ROBERTSON — Structural & Civil Engineers

PROJECT: THE WORLD TRADE CENTER | TITLE: DETAIL FOR SHEAR HEAD REPAIR K35/10 | DATE: 12-23-71

REVISIONS
1-15-72 Gen. Rev.
6-30-72
8-31-72

LOOKING SOUTH

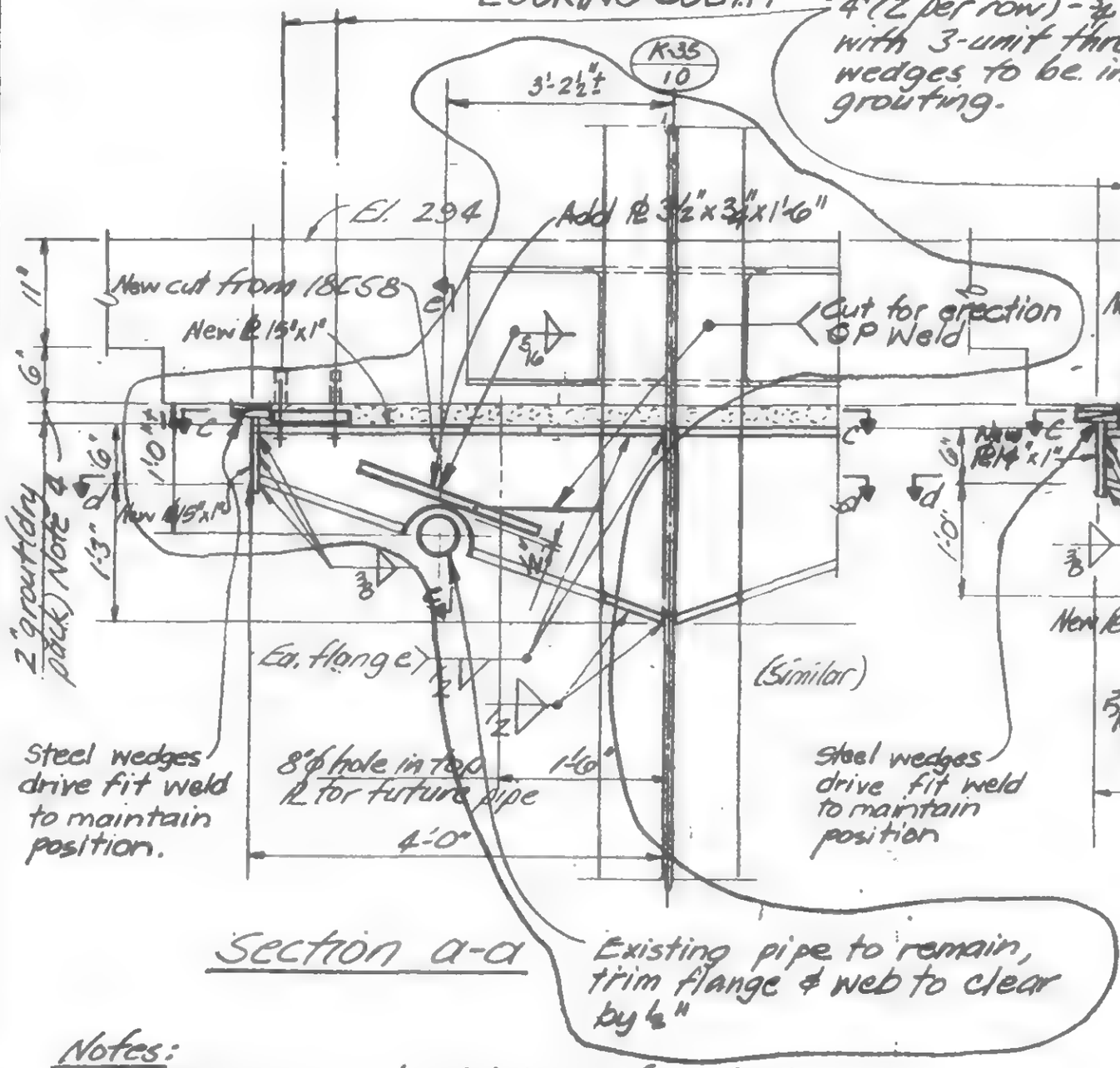

Section a-a

LOOKING WEST

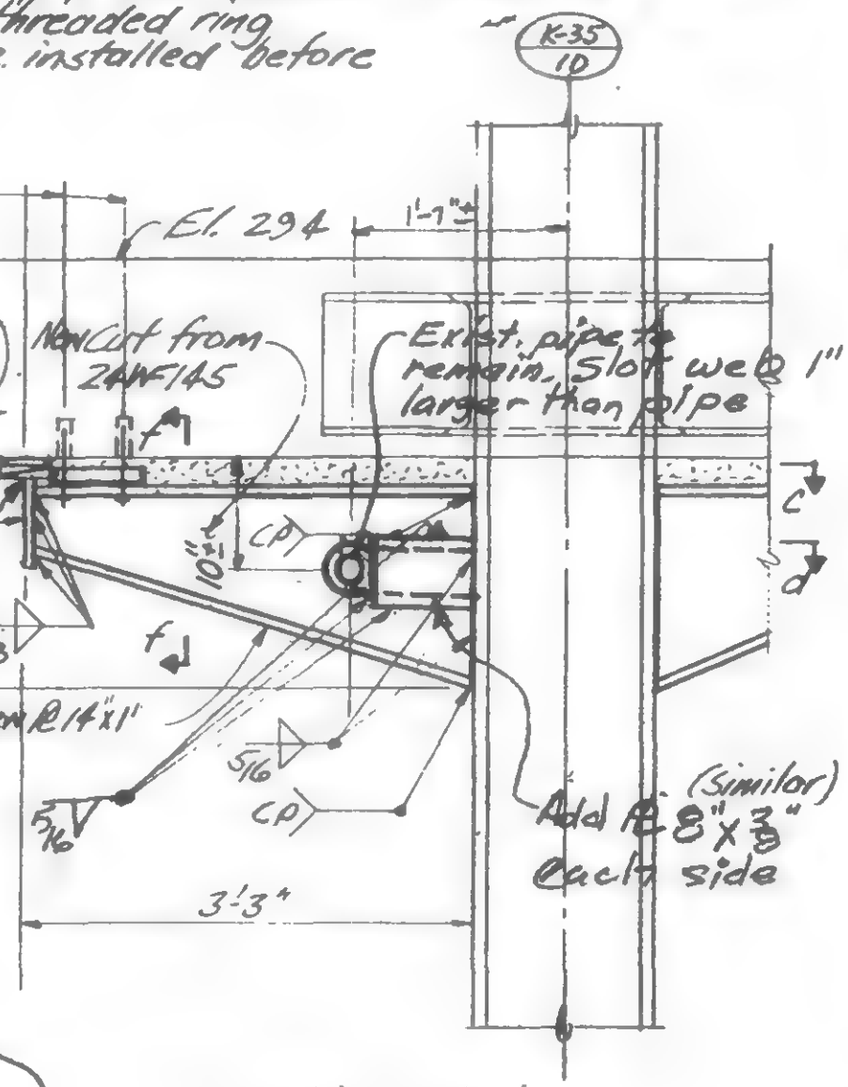

Section b-b

Notes:
1. All material to be fabricated from field measured dimensions.
2. All new steel to be Fy36
3. All electrodes to be E70XX
4. Grout to achieve 100% contact between plates and existing drop panel. Grout to be premixed Embeco grout mixed to flowable consistency and placed in conformance with manufactures written directions
5. Provide erection aides as required

LICENSED PROFESSIONAL ENGINEER — LESLIE E. ROBERTSON — No 34980 — UNIVERSITY OF THE STATE OF NEW YORK

DESIGNED
DRAWN
REVIEWED

K35/10
19-K-1055.1

SKILLING, HELLE, CHRISTIANSEN, ROBERTSON — Structural & Civil Engineers

PROJECT: THE WORLD TRADE CENTER | TITLE: DETAIL FOR SHEAR HEAD REPAIR K35/9 | DATE: 12-23-71

REVISIONS
1-13-72 Gen. Rev.
6-30-72
8-31-72

LOOKING SOUTH — 4"(2 per row) - ¾"ø cinch Anchors with 3-unit threaded ring wedges to be installed before grouting. — LOOKING EAST

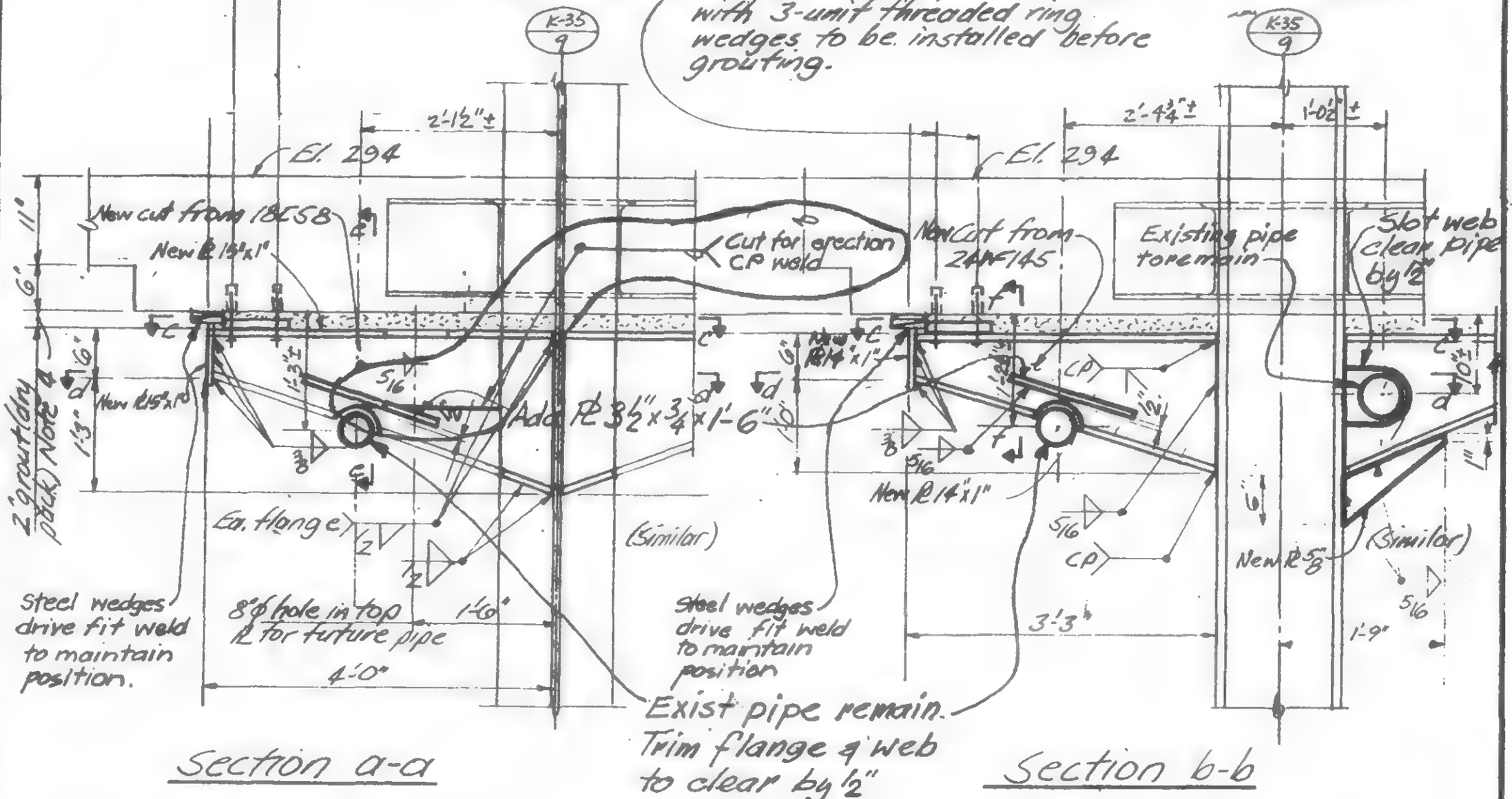

Section a-a

Section b-b

Notes:
1. All material to be fabricated from field measured dimensions.
2. All new steel to be Fy36
3. All electrodes to be E70XX
4. Grout to achieve 100% contact between plates and existing drop panel. Grout to be premixed Embeco grout mixed to flowable consistency and placed in conformance with manufactures written directions
5. Provide erection aides as required

LICENSED PROFESSIONAL ENGINEER — LESLIE E. ROBERTSON — No 34960 — UNIVERSITY OF THE STATE OF NEW YORK

SIGNED
DRAWN
REVIEWED

K 35/9
19-K-1055.1

SKILLING, HELLE, CHRISTIANSEN, ROBERTSON — Structural & Civil Engineers

PROJECT: THE WORLD TRADE CENTER | TITLE: DETAIL FOR SHEAR HEAD REPAIR K-35/8 | DATE: 8-31-72

REVISIONS

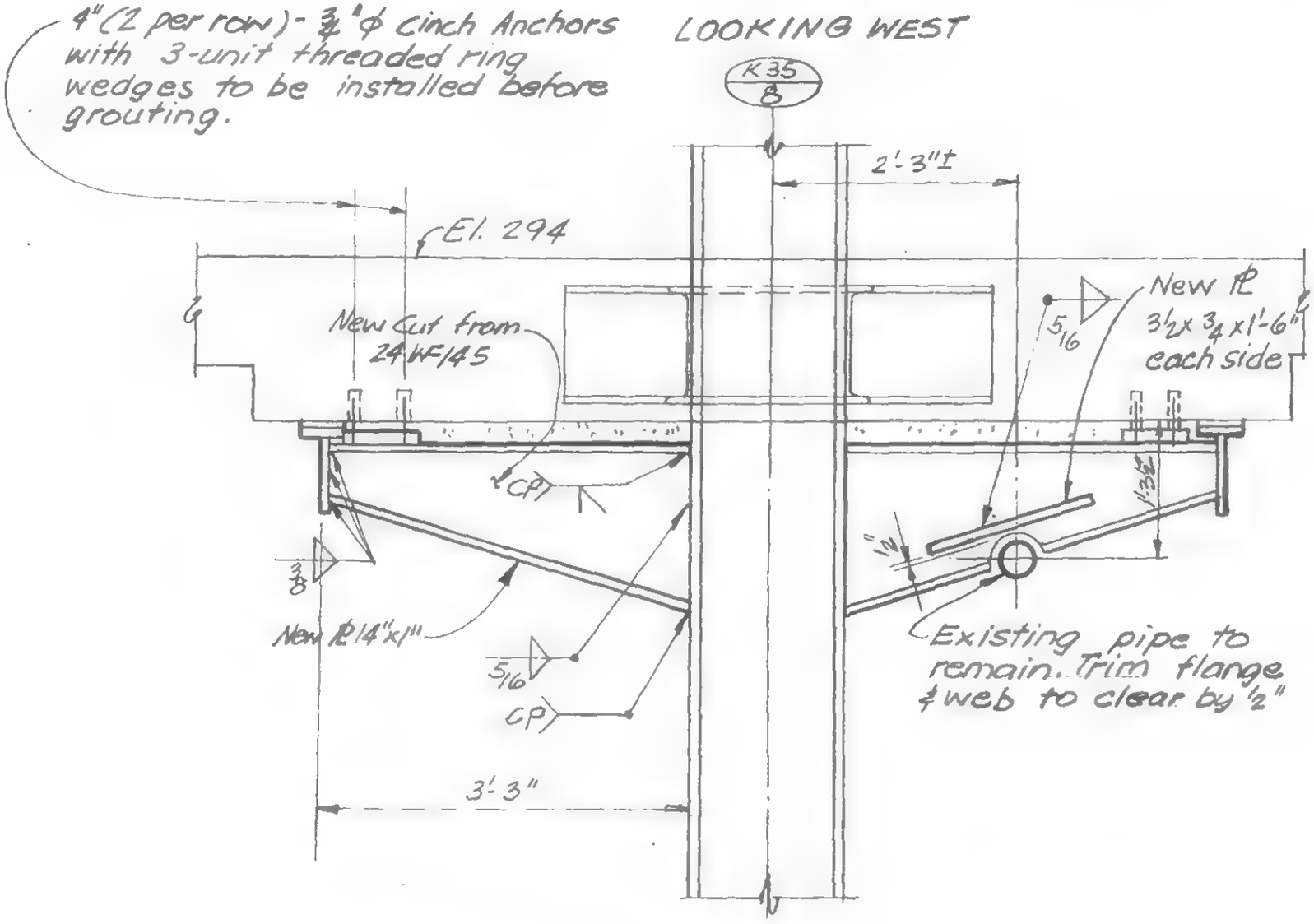

Section b-b

Notes:

1. All material to be fabricated from field measured dimensions.
2. All new steel to be Fy36.
3. All electrodes to be E70XX
4. Grout to achieve 100% contact between plates and existing drop panel. Grout to be premixed Embeco grout mixed to flowable consistency and placed in conformance with manufacturer's written directions.
5. Provide erection aides as required.

LICENSED PROFESSIONAL ENGINEER — LESLIE E. ROBERTSON — No. 34360 — UNIVERSITY OF THE STATE OF NEW YORK

SIGNED

DRAWN

REVIEWED

K-35/8

19-K-1055.1

SKILLING, HELLE, CHRISTIANSEN, ROBERTSON — Structural & Civil Engineers

PROJECT	TITLE	DATE
THE WORLD TRADE CENTER	DETAIL FOR SHEAR HEAD REPAIR K35/6 & K35/7	12-23-71

Revisions
1-5-72
6-30-72
5-4-73

4" (2 per row) - 3/4" ϕ Cinch Anchors with 3-unit threaded ring wedges to be installed before grouting.

LOOKING WEST

K35/6 K35/7

Steel wedges drive fit weld to maintain position.

Remove this portion of shearhead

2-7±

2'-3"±

El. 294

New cut from I85SB

New PL 1½"x1"

6'-11"

6'-1"

1'-3"

"Drawing" (K) Note 4

New PL 1½"x1"

3/8

1½

Gr.

Grout

C.P.

5/16

1'-3"

Ea. flange 1/2

1/2

8"ϕ hole in top PL for future pipe

1'-6"

4'-0"

(Similar)

Steel wedges drive fit weld to maintain position

New PL 1"

New PL 14"x1"

2'-1"±

Steel wedges drive fit weld to maintain position

5/16

Remove grout

New PL 3½"x¾"x1'-6" each side

Remove shims

Add PL 3½"x¾" each side

Exist. pipe to remain

Section a-a

Section b-b

Existing pipe to remain

Notes:

1. All material to be fabricated from field measured dimensions.
2. All new steel to be Fy36
3. All electrodes to be E70XX
4. Grout to achieve 100% contact between plates and existing drop panel. Grout to be premixed Embeco grout mixed to flowable consistency and placed in conformance with manufactures written directions
5. Provide erection aides as required

K35/6 & K35/7

19-K-1055.1

SKILLING, HELLE, CHRISTIANSEN, ROBERTSON — Structural & Civil Engineers

PROJECT THE WORLD TRADE CENTER | TITLE DETAIL FOR SHEAR HEAD REPAIR K35/5 | DATE 12-23-71

Revisions
15-72
6-30-72
5-4-73

4"ø (2 per row) - 3/4"ø cinch Anchors with 3-unit threaded ring wedges to be installed before grouting.

LOOKING WEST

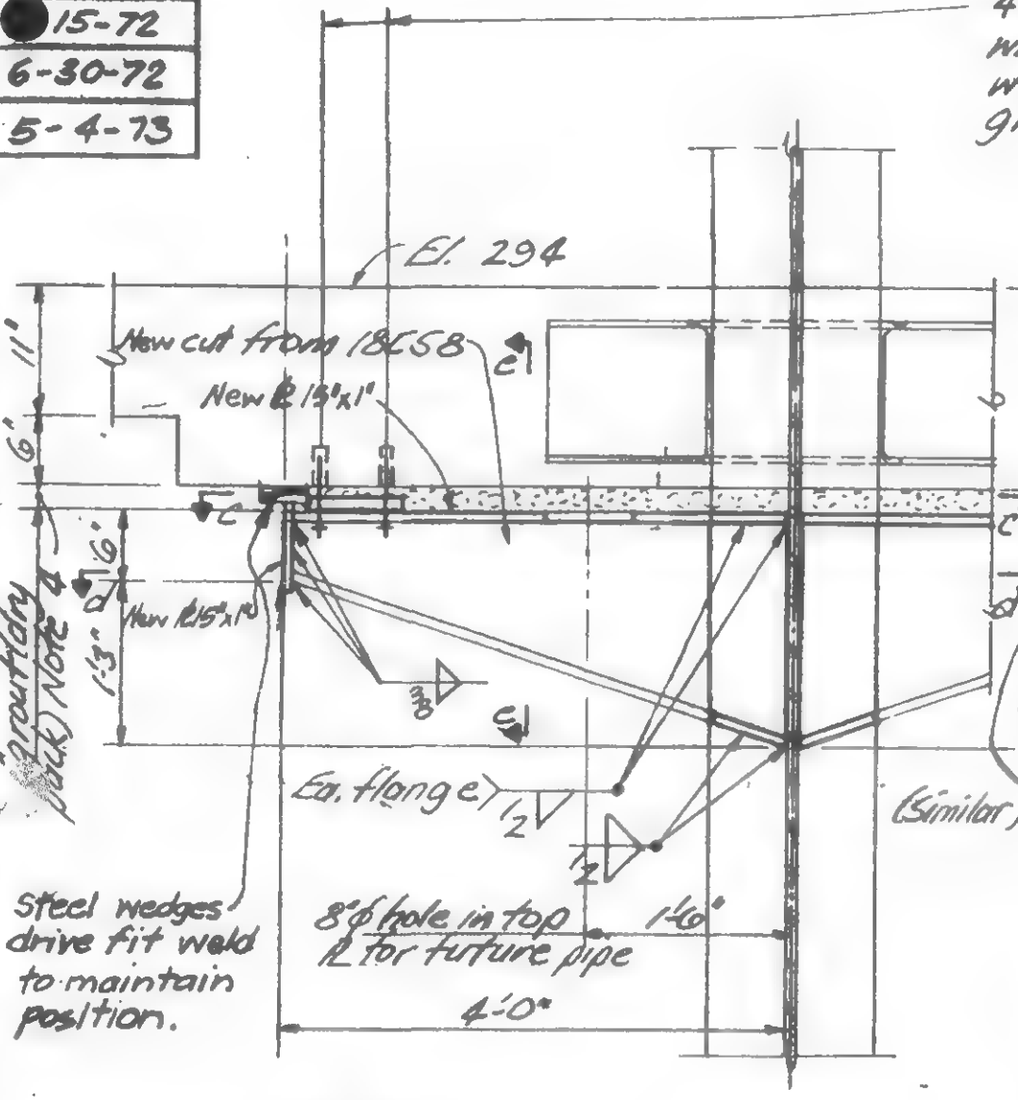

Section a-a

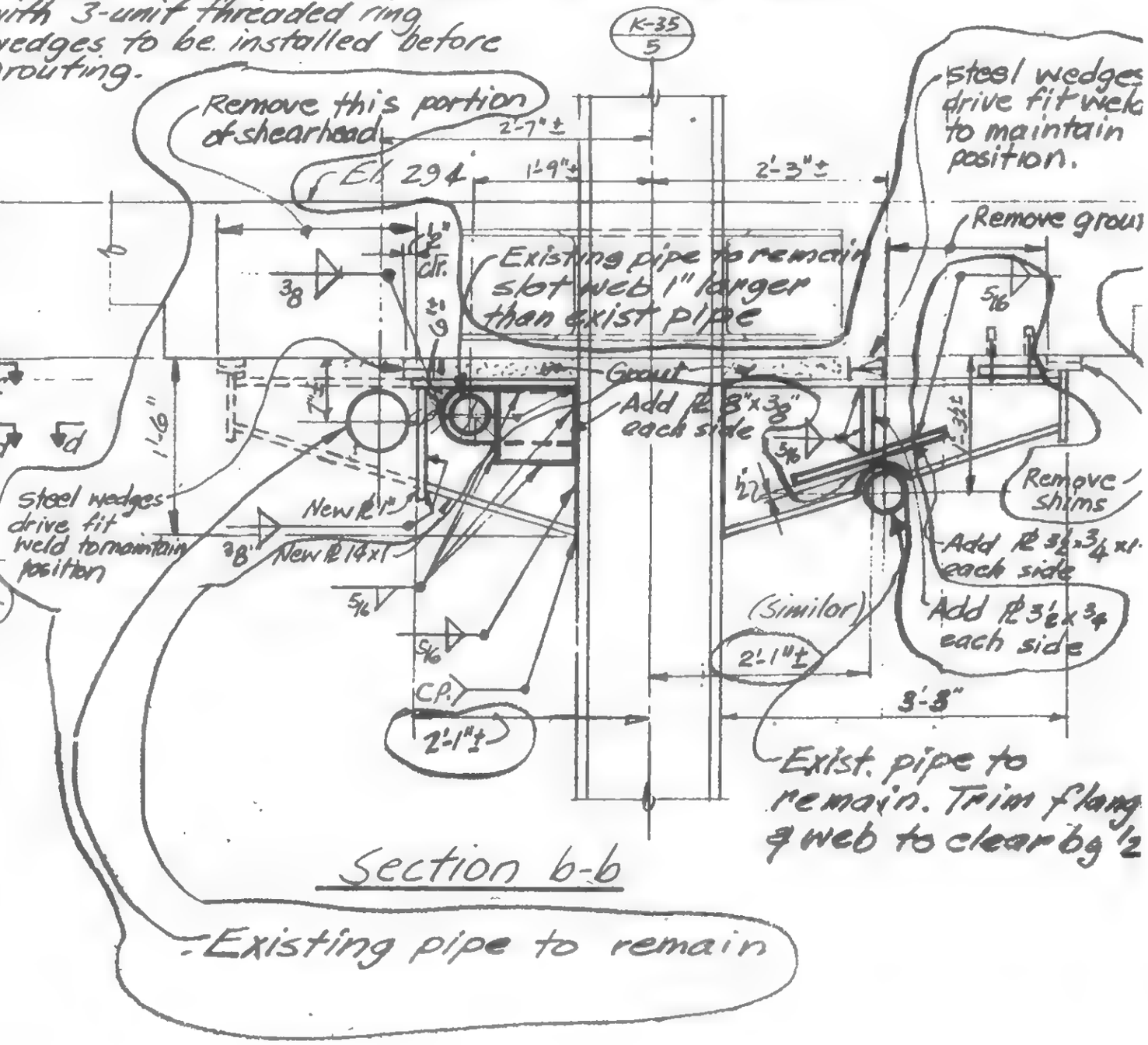

Section b-b

Notes:

1. All material to be fabricated from field measured dimensions.
2. All new steel to be Fy36
3. All electrodes to be E70XX.
4. Grout to achieve 100% contact between plates and existing drop panel. Grout to be premixed Embeco grout mixed to flowable consistency and placed in conformance with manufactures written directions
5. Provide erection aides as required

K35/5

19-K-1053.1

SKILLING, HELLE, CHRISTIANSEN, ROBERTSON — Structural & Civil Engineers

PROJECT: THE WORLD TRADE CENTER | TITLE: DETAIL FOR SHEAR HEAD REPAIR K35/4 | DATE: 12-23-71

REVISIONS
1- 12
6-30-72
8-31-72
5-4-73

LOOKING NORTH

4"(2 per row) - ¾"ϕ Cinch Anchors with 3-unit threaded ring wedges to be installed before grouting.

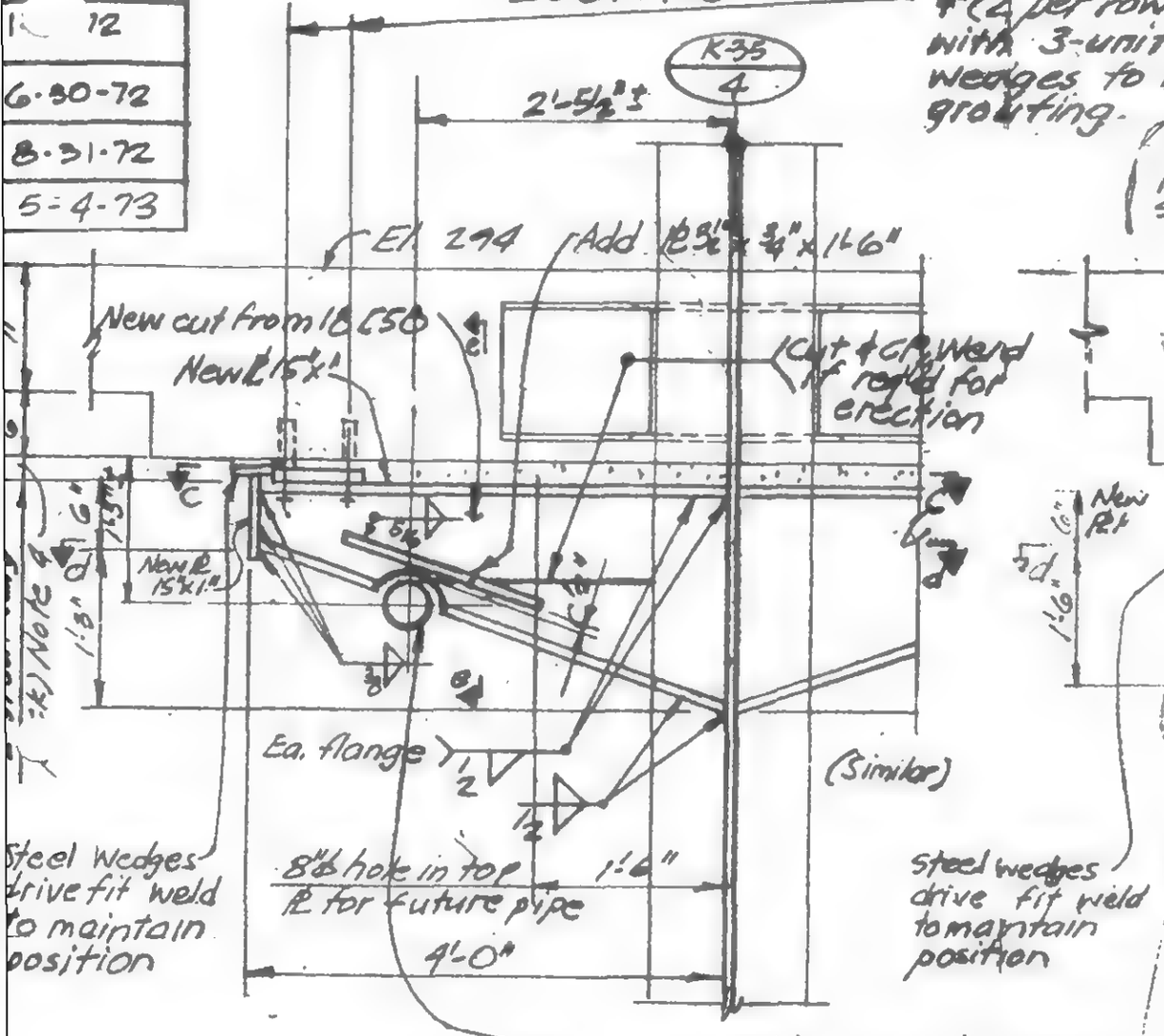

Section a-a

LOOKING WEST

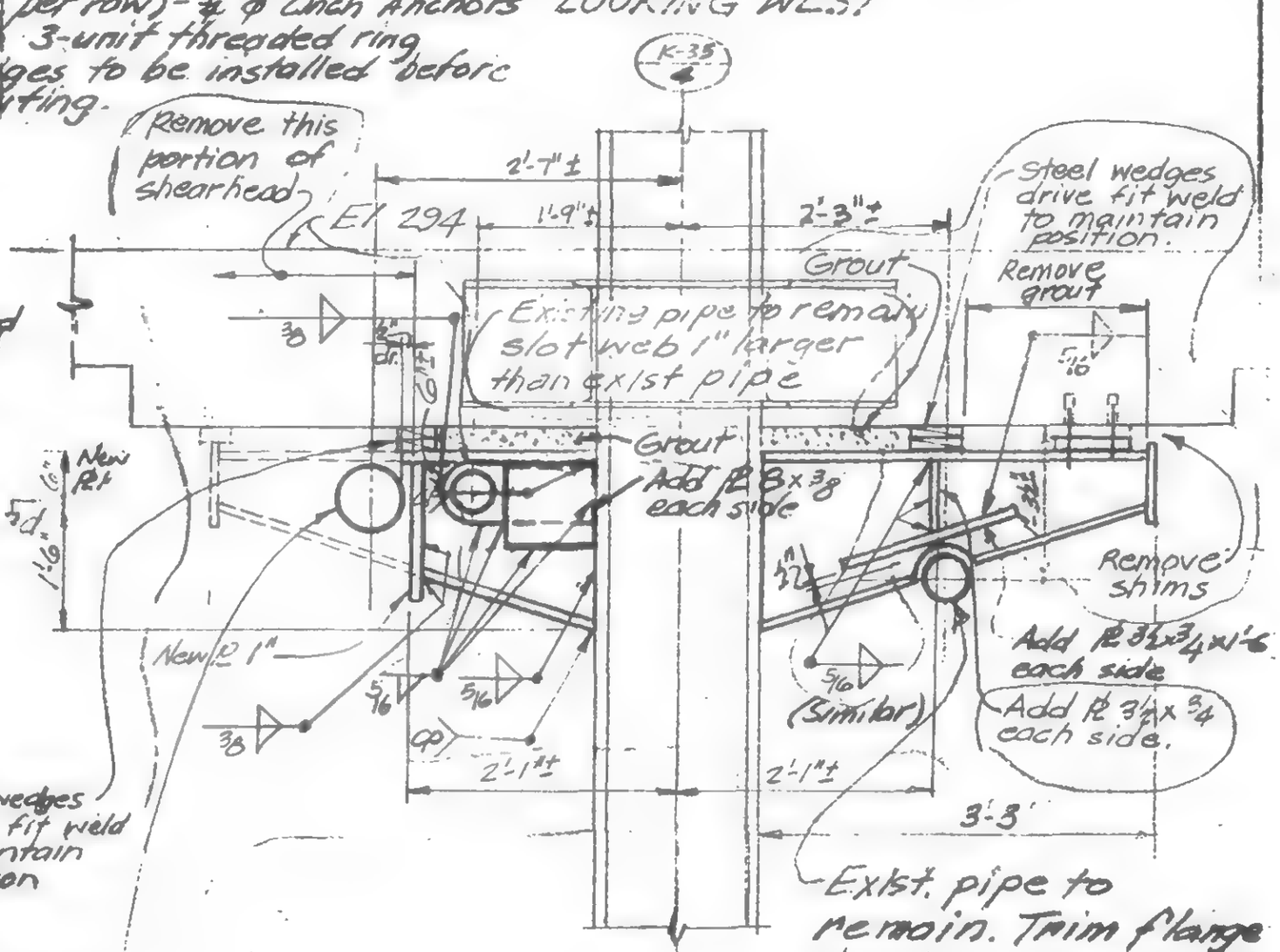

Section b-b

Notes:

1. All material to be fabricated from field measured dimensions.
2. All new steel to be Fy36
3. All electrodes to be E70xx
4. Grout to achieve 100% contact between plates and existing drop panel. Grout to be premixed Embeco grout mixed to flowable consistency and placed in conformance with manufacturers written directions
5. Provide erection aides as required.

K 35/4

19-K-1055.1

SKILLING, HELLE, CHRISTIANSEN, ROBERTSON — Structural & Civil Engineers

PROJECT THE WORLD TRADE CENTER | TITLE DETAIL FOR SHEAR HEAD REPAIR - K35/2 | DATE 12-23-71

REVISIONS
1-15-72 Gen. Rev.
6-30-72
5-4-73

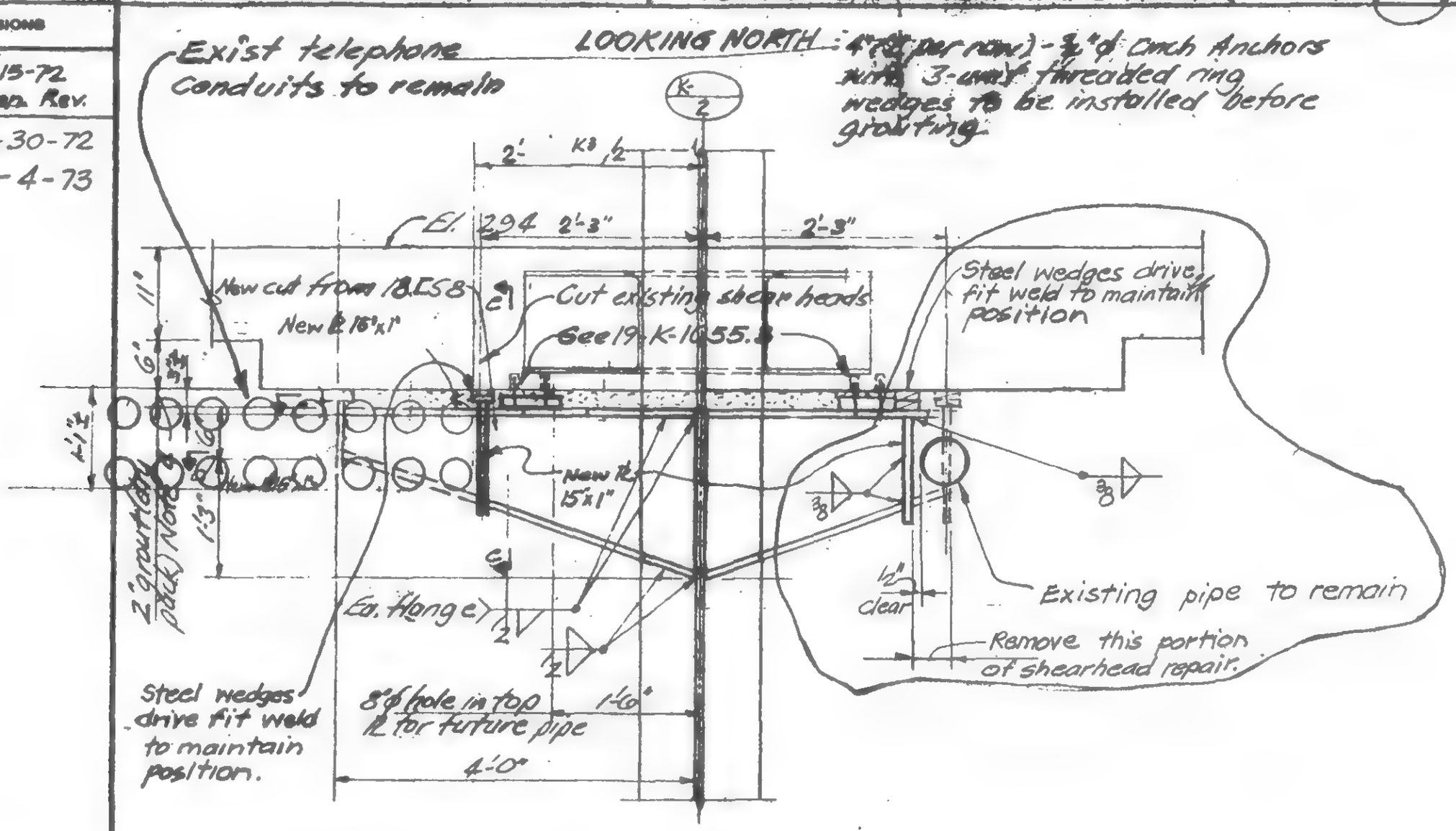

Section a-a

Notes:
1. All material to be fabricated from field measured dimensions.
2. All new steel to be Fy36
3. All electrodes to be E70XX
4. Grout to achieve 100% contact between plates and existing drop panel. Grout to be premixed Embeco grout mixed to flowable consistency and placed in conformance with manufactures written directions
5. Provide erection aides as required

K35/2
19-K-1055.1

SKILLING, HELLE, CHRISTIANSEN, ROBERTSON — Structural & Civil Engineers

PROJECT: THE WORLD TRADE CENTER | TITLE: DETAIL FOR SHEAR HEAD REPAIR - K31/6 | DATE: 12-23-71

REVISIONS

1-14-72 Gen. Rev.

6-30-72 R

3 existing vert. pipes to be relocated to clear shear head and go up thru existing sleeves

North

Existing pipe to be lowered to clear shear head

New shear heads

Exist. col.

Existing sleeves

Trim flanges as req'd to clear pipe by ½"

8"

Section c-c

CP

4 New ½" R (bot.)

Section d-d

LICENSED PROFESSIONAL ENGINEER — LESLIE E. ROBERTSON — No. 34360 — UNIVERSITY OF THE STATE OF NEW YORK

ISSUED

DRAWN

REVIEWED

K31/6

19-K-1055.2

SKILLING, HELLE, CHRISTIANSEN, ROBERTSON — Structural & Civil Engineers

PROJECT THE WORLD TRADE CENTER | TITLE DETAIL FOR SHEAR HEAD REPAIR - K31/6 | DATE 12-23-71

Revisions
1- -72
6-30-72 R

4"ℓ (2 per row) - ¾"ϕ Cinch Anchors with 3-unit threaded ring wedges to be installed before grouting.

LOOKING EAST

K-31 / 6

Place detail shown in 19-K-1055.3 to clear exist sleeves

3 exist. vert. sleeves

El. 294

2-10"± El. 294

1'-4½"

New cut from 18E58

New PL 15"x1"

New cut from 24NF145

New PL 14"x1"

New PL 15"x1"

New PL 15"x1"

(Similar)

(Similar)

Ea. flange

Steel wedges drive fit weld to maintain position.

8"ϕ hole in top PL for future pipe

1'-6"

4'-0"

Steel wedges drive fit weld to maintain position.

3'-3"

Exist. pipe to be lowered to clear shear head

B exist vert. pipes to be relocated and go up thru exist. sleeves. Change regd for Central Services.

Section a-a

Section b-b

Notes:

1. All material to be fabricated from field measured dimensions.
2. All new steel to be Fy36
3. All electrodes to be E70XX
4. Grout to achieve 100% contact between plates and existing drop panel. Grout to be premixed Embeco grout mixed to flowable consistency and placed in conformance with manufacturers written directions
5. Provide erection aides as required

K 31/6

19-K-1055.1

SKILLING, HELLE, CHRISTIANSEN, ROBERTSON — Structural & Civil Engineers

PROJECT: THE WORLD TRADE CENTER | TITLE: DETAIL FOR SHEAR HEAD REPAIR K31/3 | DATE: 12-23-71

REVISIONS

1-15-72 Gen. Rev.

6-30-72

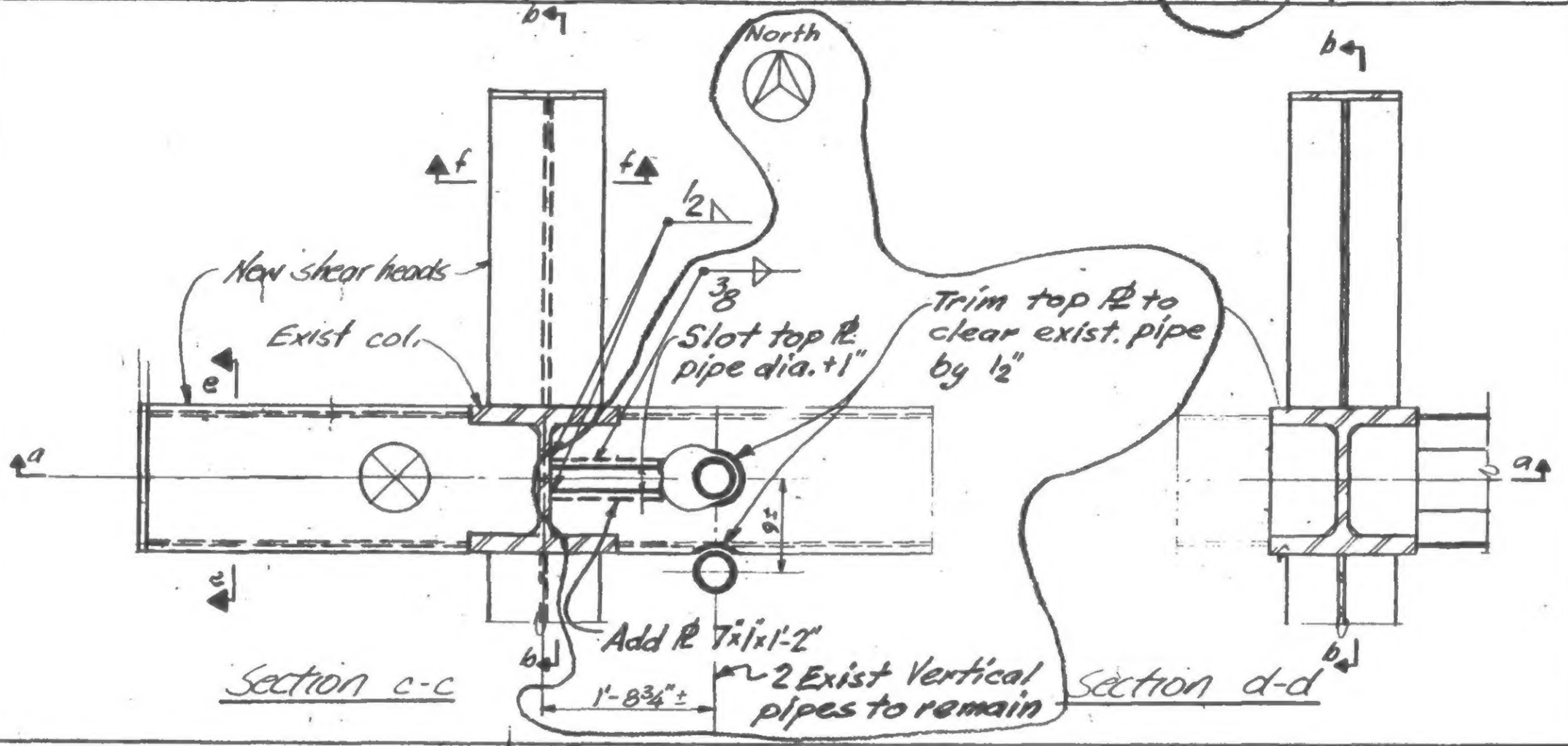

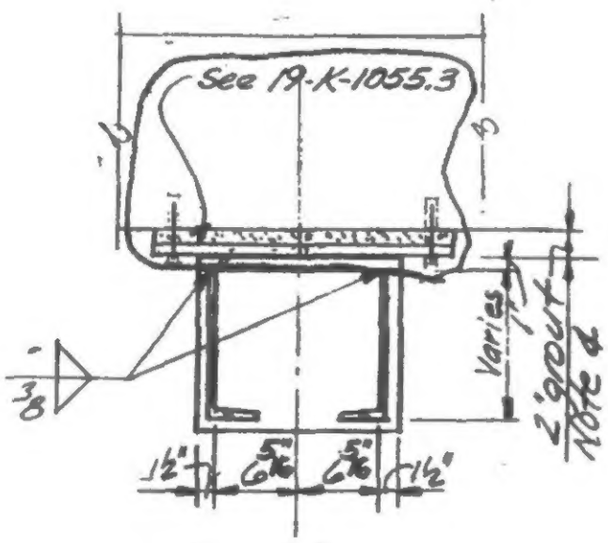

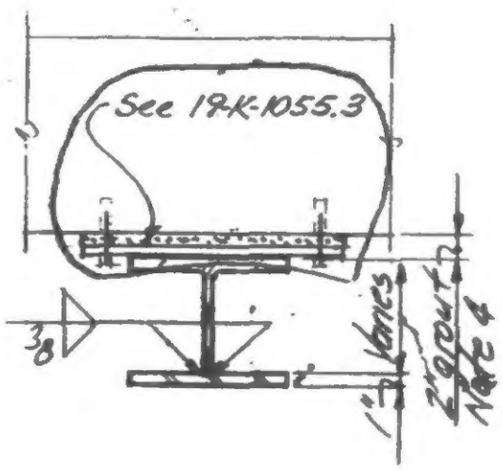

LICENSED PROFESSIONAL ENGINEER — LESLIE E. ROBERTSON — No 34980 — UNIVERSITY OF THE STATE OF NEW YORK

ADDED

DRAWN

REVIEWED

K31/3

19-K-1055.2

SKILLING, HELLE, CHRISTIANSEN, ROBERTSON — Structural & Civil Engineers

PROJECT: THE WORLD TRADE CENTER | TITLE: DETAIL FOR SHEAR HEAD REPAIR K31/5 | DATE: 12-23-71

REVISIONS
1-15-72 Gen. Rev.
6-30-72
8-31-72

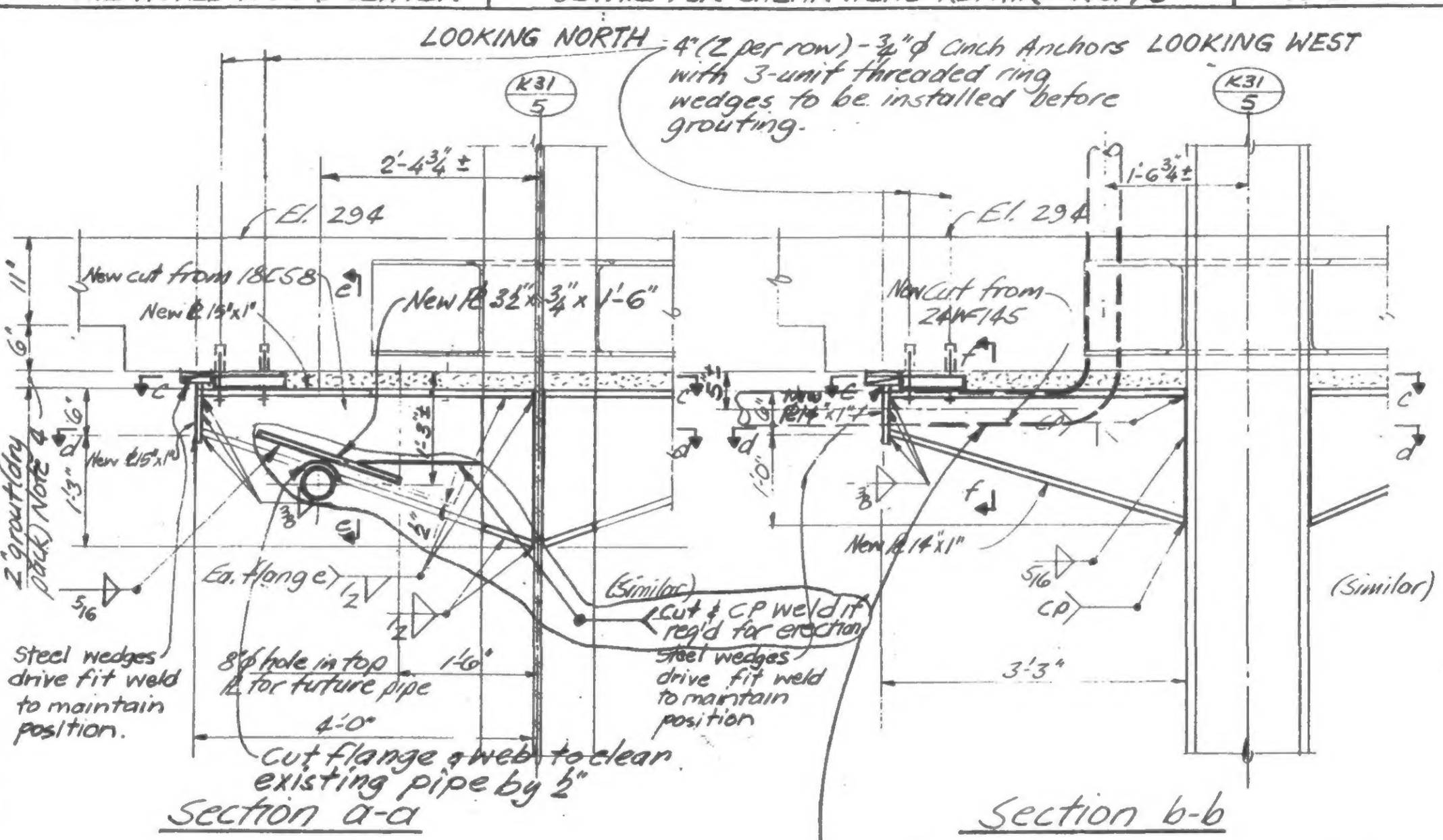

Section a-a

Section b-b

Remove existing pipe to clear new shear head. Pipe located in different position will be shown in future central service Drawings

Notes:
1. All material to be fabricated from field measured dimensions.
2. All new steel to be Fy36
3. All electrodes to be E70XX
4. Grout to achieve 100% contact between plates and existing drop panel. Grout to be premixed Embeco grout mixed to flowable consistency and placed in conformance with manufactures written directions
5. Provide erection aides as required

LICENSED PROFESSIONAL ENGINEER — LESLIE E. ROBERTSON — No. 34360 — UNIVERSITY OF THE STATE OF NEW YORK

DESIGNED
DRAWN
REVIEWED

K 31/5
19-K-1055.1